For Discount Tecumseh Engine Parts Call 606-678-9623 or 606-561-4983

Engine Parts List #1

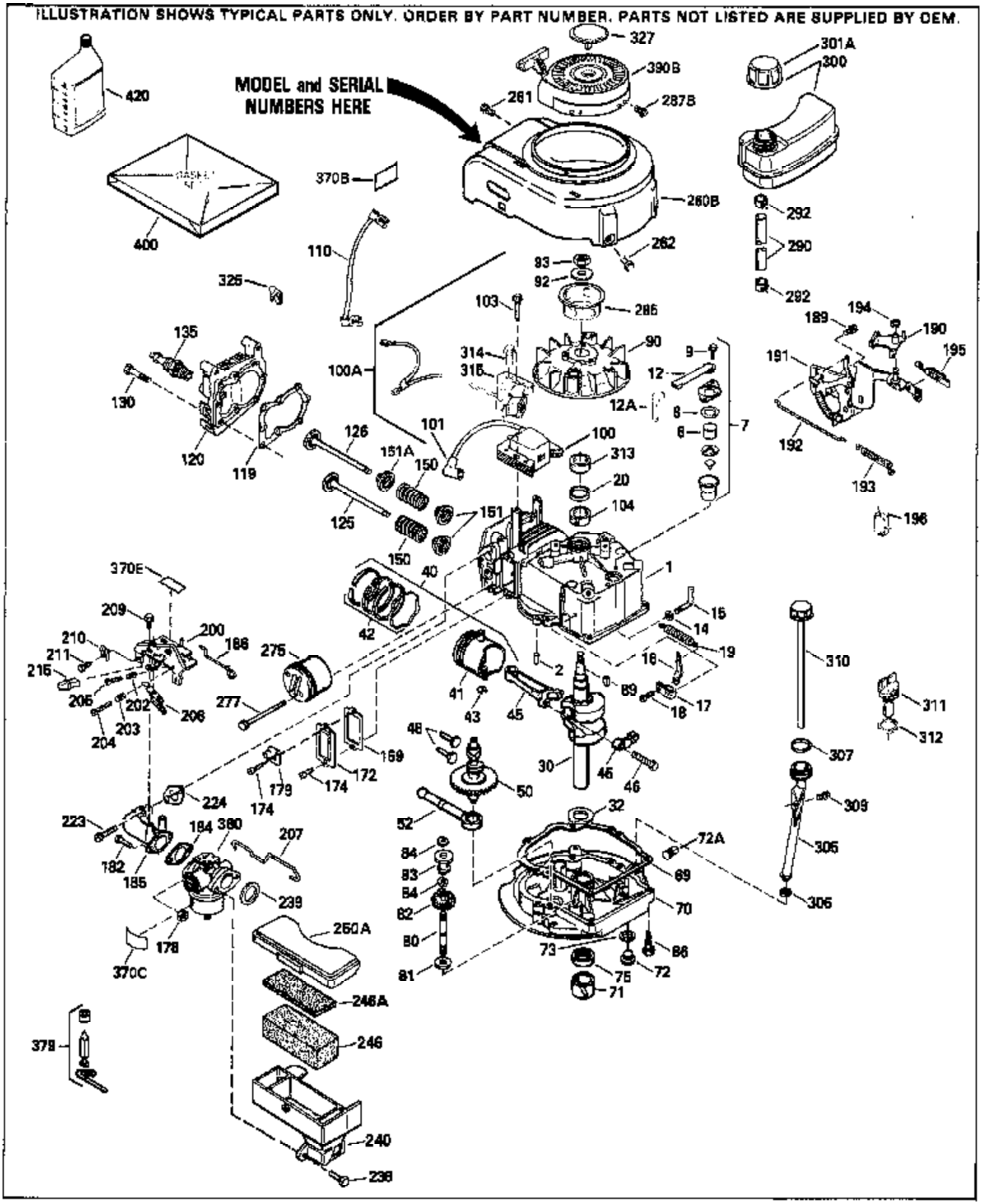

www.mymowerparts.com

For Discount Tecumseh Engine Parts Call 606-678-9623 or 606-561-4983

Ref #	Part Number	Qty	Description
1	36265	1	Cylinder (Incl. 2 & 20)
2	26727	2	Dowel Pin
6	33734	1	Breather Element
7	34214A	1	Breather Ass'y.(Incl.6,8,9,12 & 12B)
8	33735	1	* Breather Gasket
9	30200	1	Screw, 10-24 x 9/16"
12B	34695	1	Breather Tube Elbow
12	33886	1	Breather Tube
14	28277	1	Washer
15	30589	1	Governor Rod (Incl. 14)
16	31383A	1	Governor Lever
17	31335	1	Governor Lever Clamp
18	650548	1	Screw, 8-32 x 5/16"
19	31361	1	Extension Spring
20	32600	1	Oil Seal
30	35606	1	Crankshaft
40	36073	1	Piston, Pin & Ring Set (Std.)
40	36074	1	Piston, Pin & Ring Set (.010" OS)
40	36075	1	Piston, Pin & Ring Set (.020" OS)
41	36070	1	Piston & Pin Ass'y. (Std.) (Incl. 43)
41	36071	1	Piston & Pin Ass'y. (.010" OS) (Incl. 43)
41	36072	1	Piston & Pin Ass'y. (.020" OS) (Incl. 43)
42	36076	1	Ring Set (Std.)
42	36077	1	Ring Set (.010" OS)
42	36078	1	Ring Set (.020" OS)
43	20381	2	Piston Pin Retaining Ring
45	30963B	1	Connecting Rod Ass'y. (Incl. 46)
46	32610A	2	Connecting Rod Bolt
48	27241	2	Valve Lifter
50	35992	1	Camshaft (MCR)
52	29914	1	Oil Pump Ass'y.
69	35261	1	* Mounting Flange Gasket
70	34311D	1	Mounting Flange (Incl. 72 thru 83)
72	36083	1	Oil Drain Plug
75	27897	1	Oil Seal
80	30574A	1	Governor Shaft
81	30590A	1	Washer
82	30591	1	Governor Gear Ass'y.(Incl. 81)
83	30588A	1	Governor Spool
86	650488	6	Screw, 1/4-20 x 1-1/4"
89	611004	1	Flywheel Key
90	611112	1	Flywheel
92	650815	1	Belleville Washer
93	650816	1	Flywheel Nut
100	34443A	1	Solid State Ignition
101	610118	1	Spark Plug Cover
103	650814	2	Screw, Torx T-15, 10-24 x 1"
110	34961	1	Ground Wire
119	33554A	1	* Cylinder Head Gasket
120	34342	1	Cylinder Head
125	29313C	1	Exhaust Valve (Std.) (Incl. 151)
125	29315C	1	Exhaust Valve (1/32" OS) (Incl. 151)
126	29314B	1	Intake Valve (Std.) (Incl. 151)
126	29315C	1	Intake Valve (1/32" OS) (Inc. 151)
130	6021A	8	Screw, 5/16-18 x 1-1/2"
135	35395	1	Resistor Spark Plug (RJ19LM)
150	35991	2	Valve Spring
151	31673	2	Valve Spring Cap

www.mymowerparts.com

For Discount Tecumseh Engine Parts Call 606-678-9623 or 606-561-4983

Ref #	Part Number	Qty	Description
166	35827	1	Engine Shroud
169	27234A	1	* Valve Cover Gasket
172	32755	1	Valve Cover
174	650128	2	Screw, 10-24 x 1/2"
178	29752	2	Nut & Lock Washer, 1/4-28
182	6201	2	Screw, 1/4-28 x 7/8"
184	26756	1	* Carburetor To Intake Pipe Gasket
185	31384A	1	Intake Pipe (Incl. 224)
186	32653	1	Governor Link
189	650839	2	Screw, 1/4-20 x 3/8"
190	35831	1	Brake Lever
191	35039B	1	S.E. Brake Bracket (Incl. 195)
192	34966	1	Brake Control Link
193	35830	1	Brake Spring
194	32309	1	Retaining Ring
195	610973	1	Terminal
207	34336	1	Throttle Link
223	650451	2	Screw, 1/4-20 x 1"
224	34690A	1	* Intake Pipe Gasket
238	650932	2	Screw, 10-32 x 49/64"
239	34338	1	Air Cleaner Gasket
261	30200	2	Screw, 10-24 x 9/16"
262	650831	2	Screw, 1/4-20 x 1/2"
263A	35821	1	Grill Starter
275	34613A	1	Muffler
277	650795	2	Screw, 1/4-20 x 2-1/4"
285	35000	1	Starter Cup
290	34357	1	Fuel Line
292	26460	2	Fuel Line Clamp
300	35586	1	Fuel Tank (Incl. 292 & 301)
305	35819A	1	Oil Fill Tube
306	34265	1	* "O" Ring
307	35499	1	"O" Ring
309	650936	1	Screw, 10-32 x 13/32"
310	35822	1	Dipstick
313	34080	1	Spacer
370B	35841	1	Name Decal
380	632078A	1	Carburetor (Incl. 184)
400	35997	1	* Gasket Set (Incl. items marked PK i n notes) Incl. part #'s: 26756 (1), 27234A (1), 33554A (1), 33735 (1), 34265 (1), 34338 (1), 34690A (1), 35261 (1)

www.mymowerparts.com

ILLUSTRATION SHOWS TYPICAL PARTS ONLY. ORDER BY PART NUMBER. PARTS NOT LISTED ARE SUPPLIED BY OEM.

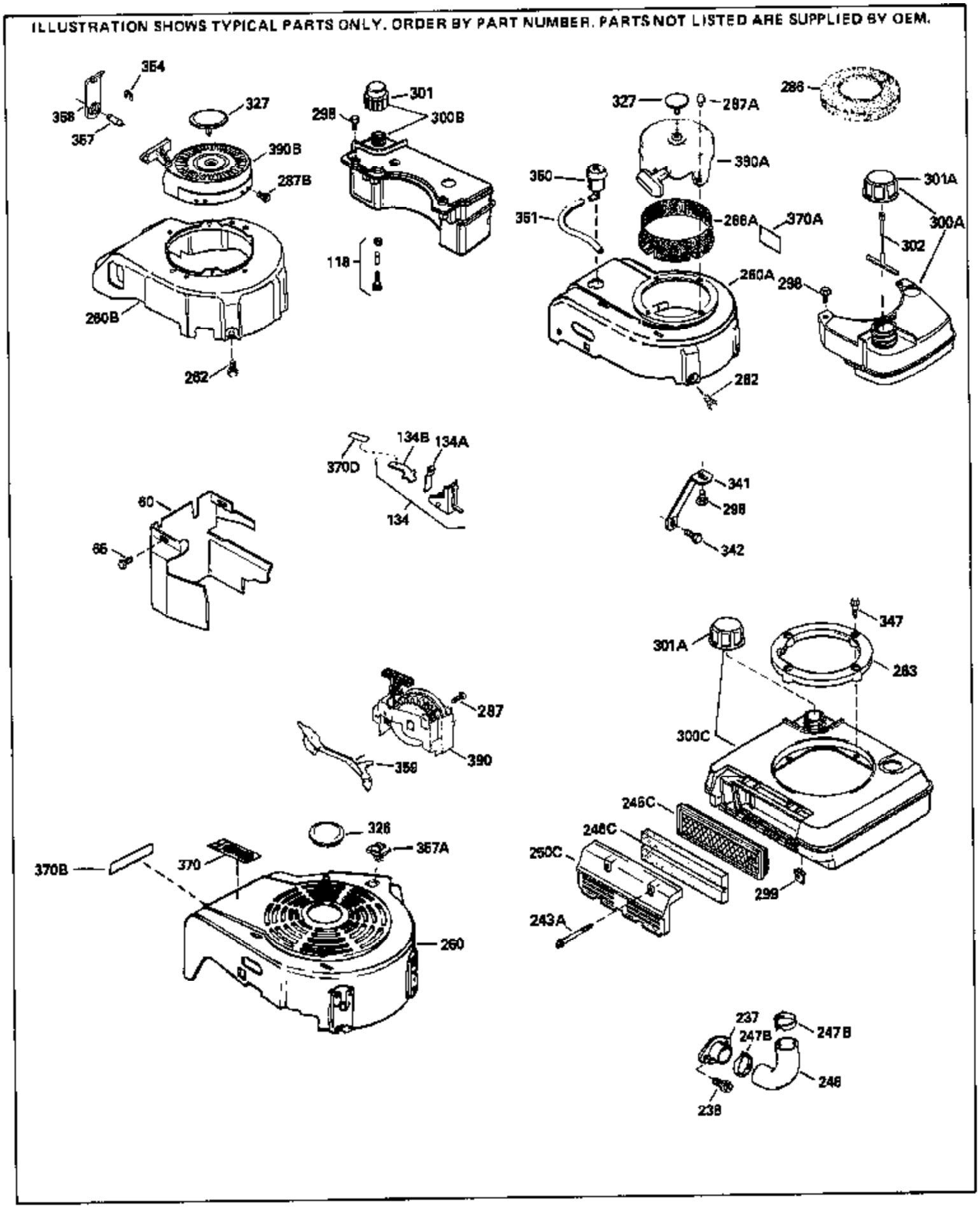

For Discount Tecumseh Engine Parts Call 606-678-9623 or 606-561-4983

Ref #	Part Number	Qty	Description
12B	34695	1	Breather Tube Elbow
166	35827	1	Engine Shroud
238	650932	2	Screw, 10-32 x 49/64"
260	35826	1	Blower Housing
262	650831	2	Screw, 1/4-20 x 1/2"
263A	35821	1	Grill Starter
287	650926	2	Screw, 8-32 x 21/64"
301	35355	1	Fuel Cap
347	650898	4	Screw, 10-32 x 27/32"
370A	34144	1	Primer Decal
370	35977	1	Instruction Decal
370B	35841	1	Name Decal
390	590637	1	Rewind Starter

www.mymowerparts.com

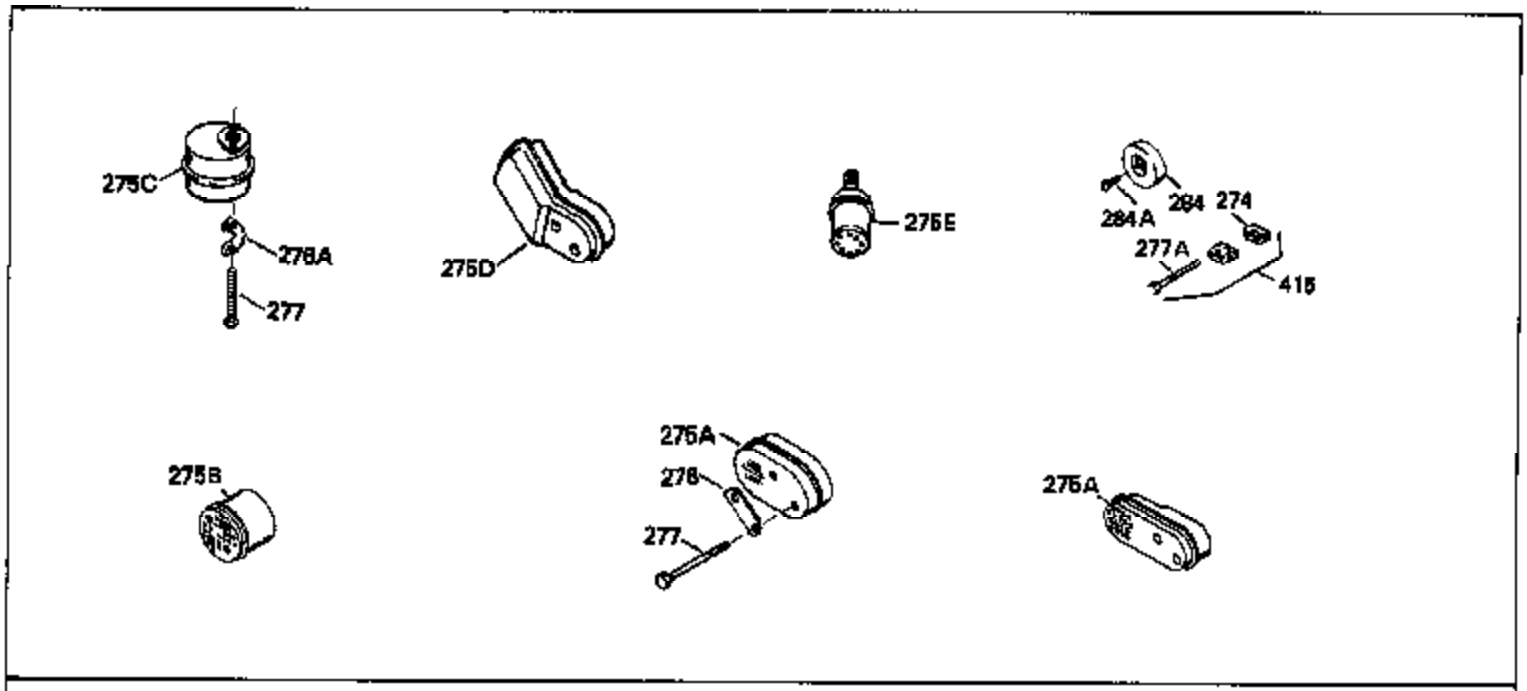
275C
276A
277
275D
275E
284A
284
274
277A
415
275B
275A
276
277
275A

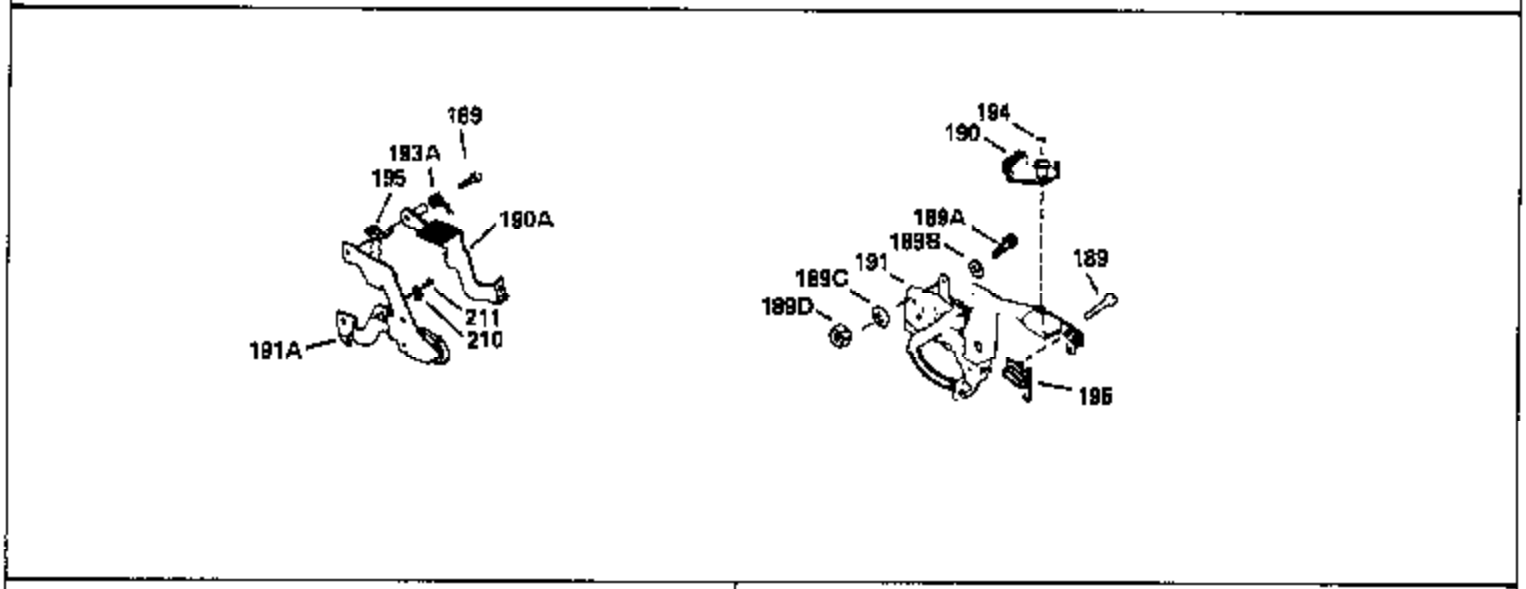
189
193A
195
190A
211
210
191A
194
190
189A
189B
191
189C
189D
189
195

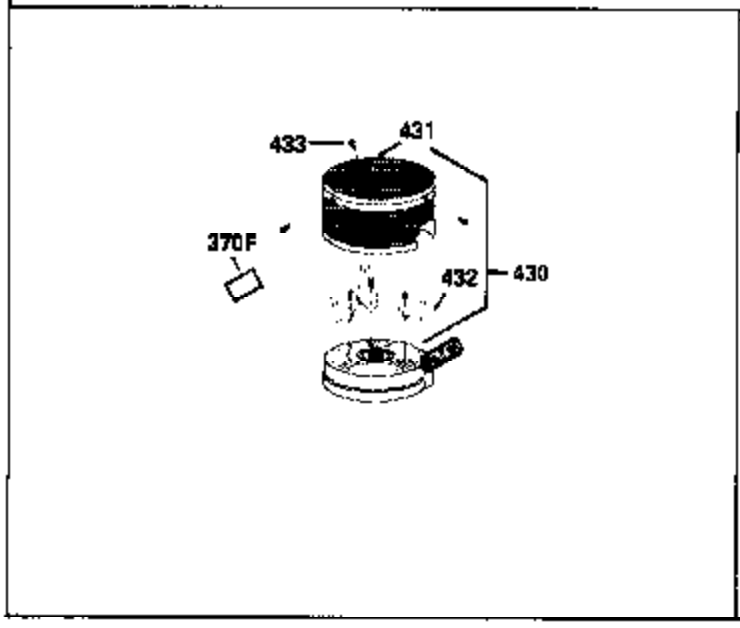
433
431
370F
432
430

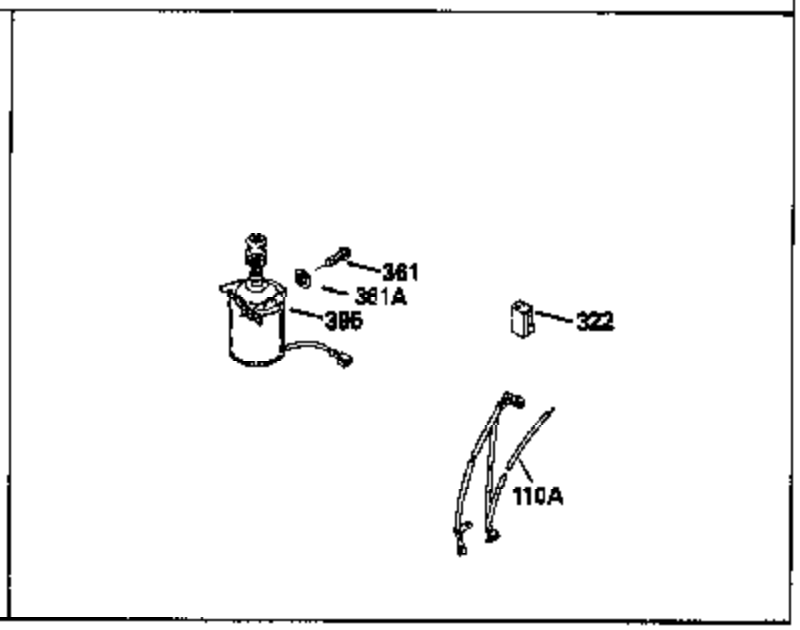
361
361A
395
322
110A

For Discount Tecumseh Engine Parts Call 606-678-9623 or 606-561-4983

Ref #	Part Number	Qty	Description
12B	34695	1	Breather Tube Elbow
166	35827	1	Engine Shroud
189	650839	2	Screw, 1/4-20 x 3/8"
190	35831	1	Brake Lever
191	35039B	1	S.E. Brake Bracket (Incl. 195)
194	32309	1	Retaining Ring
195	610973	1	Terminal
263A	35821	1	Grill Starter
275A	36424	1	Spark Arrestor Muffler (Optional)
276	33753	1	Locking Plate
277	650795	2	Screw, 1/4-20 x 2-1/4"

www.mymowerparts.com

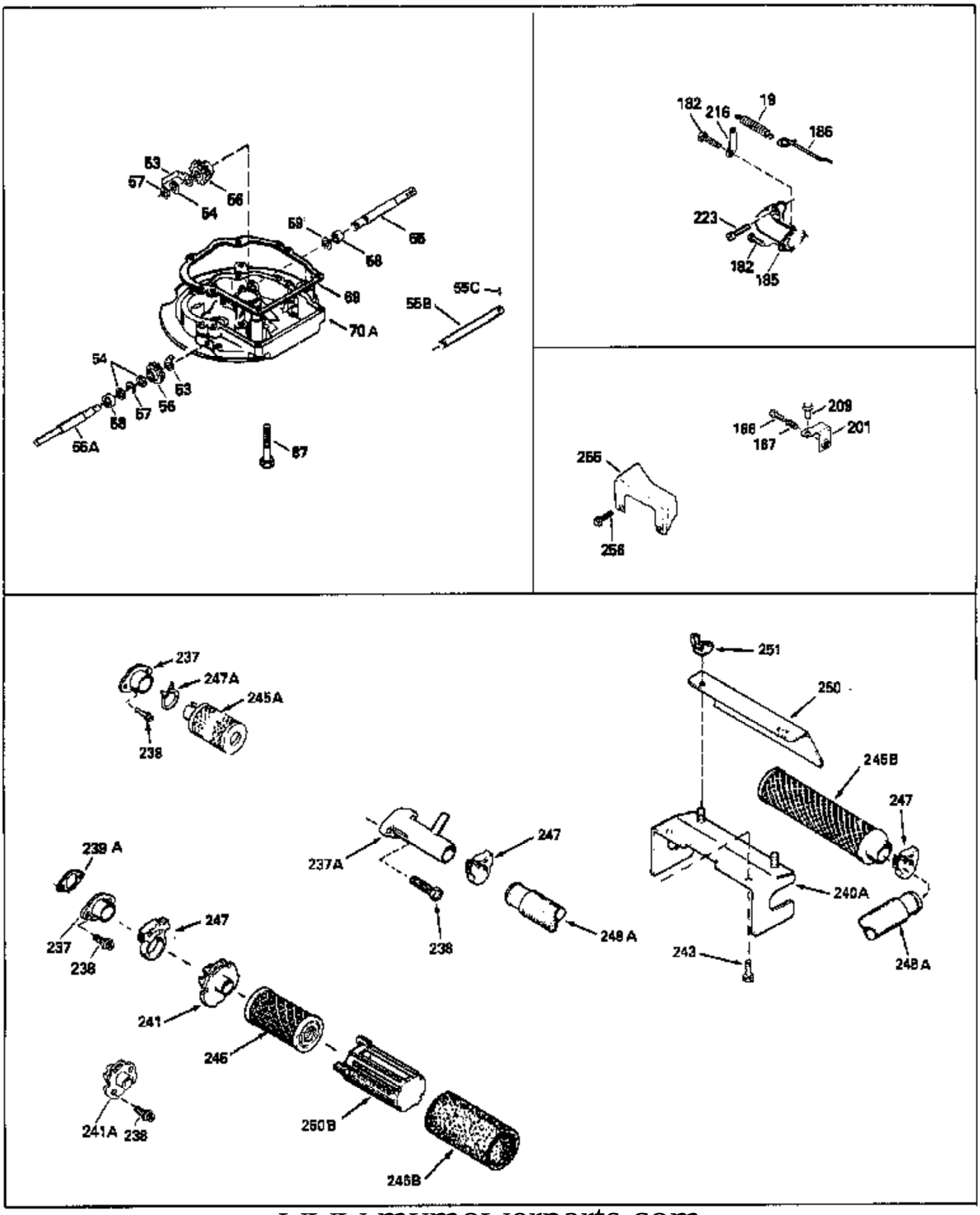
53
57
56
54
59
55
58
69
55C
55B
70A
54
53
56
57
58
55A
67
182
216
19
186
223
182
185
209
166
201
167
255
256
237
247A
245A
238
251
250
245B
247
239 A
237A
247
240A
237
238
247
238
248 A
243
248 A
241
246
241A
238
250B
246B

For Discount Tecumseh Engine Parts Call 606-678-9623 or 606-561-4983

Ref #	Part Number	Qty	Description
12B	34695	1	Breather Tube Elbow
19	31361	1	Extension Spring
69	35261	1	* Mounting Flange Gasket
166	35827	1	Engine Shroud
182	6201	2	Screw, 1/4-28 x 7/8"
185	31384A	1	Intake Pipe (Incl. 224)
186	32653	1	Governor Link
216	33086	1	R.P.M. Adjusting Lever
223	650451	2	Screw, 1/4-20 x 1"
238	650932	2	Screw, 10-32 x 49/64"
241	35797	1	Air Cleaner Collar
245	35066	1	Air Cleaner Filter
250	35065	1	Air Cleaner Cover
263A	35821	1	Grill Starter

www.mymowerparts.com