For Murray Parts Call 606-678-9623 or 606-561-4983

MODEL NOS.
9-38211 — 14 HP BRIGGS & STRATTON
9-38222 — 18 HP BRIGGS & STRATTON

CHASSIS & HOOI

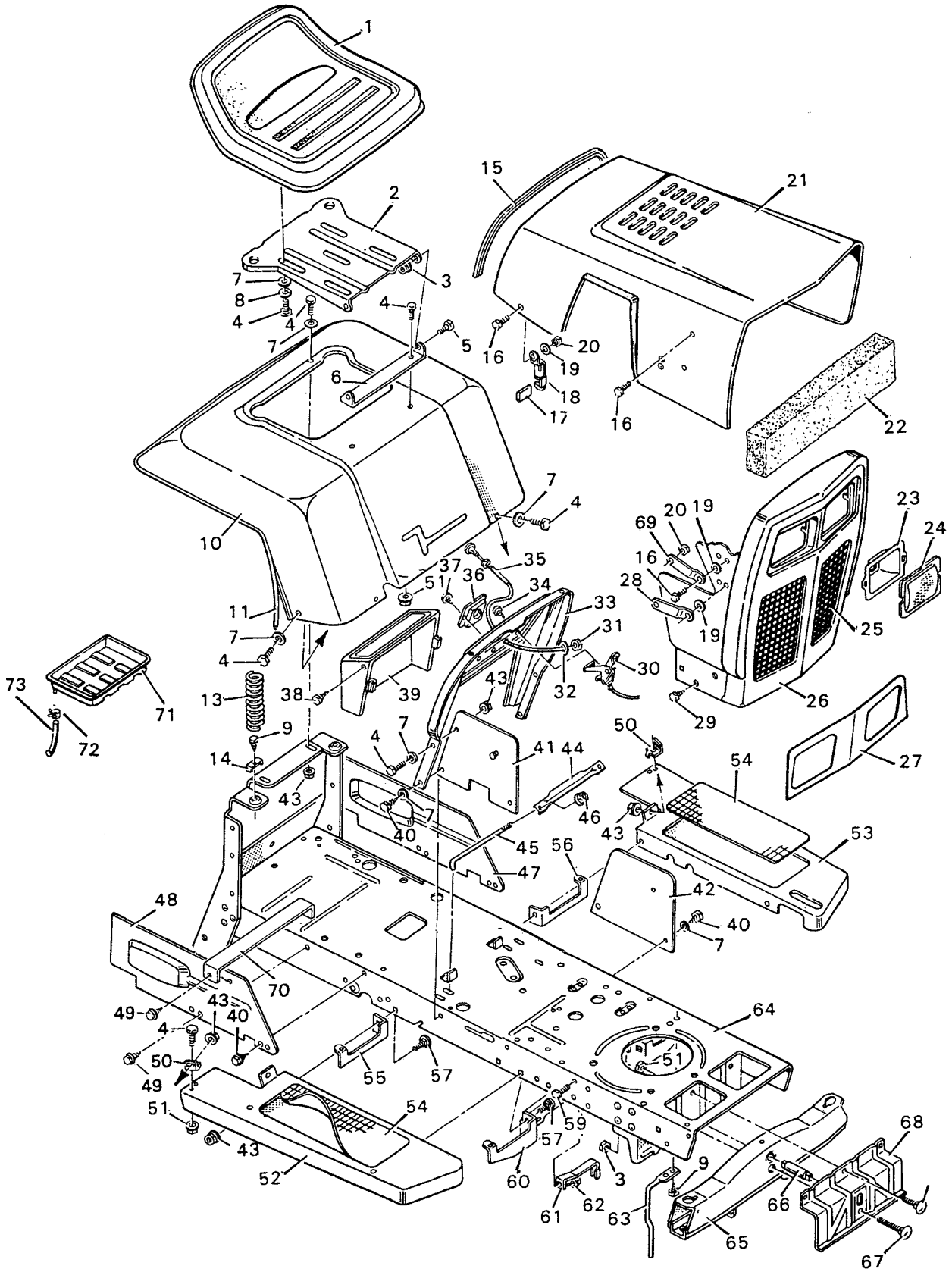

www.mymowerparts.com

For Murray Parts Call 606-678-9623 or 606-561-4983

CHASSIS & HOOD

MODEL NOS.
9-38211 — 14 HP BRIGGS & STRATTON
9-38222 — 18 HP BRIGGS & STRATTON

KEY NO.	DESCRIPTION	PART NO.
1	Seat	91450
2	Seat Support	91044F200
3	Locknut, Flange 3/8''-16	15x84
4	Bolt, Hex 5/16''-18x5/8''	1x45
5	Bolt, Shoulder 3/8''-16x7/8''	9x17
6	Bracket, Seat Pivot	90031F200
7	Washer	17x47Z
8	Lockwasher	18x16
9	Screw	26x49
10	Seat Deck	90659F200
11	Trim, Plastic	21789
13	Spring	164x17F200
14	Retainer, Spring	90014F200
15	Hood Trim, Vinyl*	21765
16	Screw, Machine #10-24x5/8''*	4x21
17	Grip, Hood Latch*	21434
18	Latch	21798Z
--	Latch	21799Z
19	Washer*	17x17Z
20	Nut, Hex #24-24*	15x81
21	Hood Assembly	24087F200
22	Baffle, Foam Heat	403154
23	Reflector	90009C
24	Lens	90082
25	Screen, Left Grille	24254E701
--	Screen, Right Grille	24089E701
26	Grille Assembly, Complete	90668F200
27	Trim, Headlight	90654C
28	Pivot Bar	23046
29	Screw	26x202
30	Throttle Control	91991
31	Hex Nut	15x33
32	Lockwasher	18x31
33	Control Panel	91580F200
34	Screw	26x201
35	Cable, Choke	23780
36	Bearing, Steering Post	21707
37	Screw	26x186
38	Screw	26x214
39	Cover, Battery	407309
40	Screw	26x197
41	Plate, Right Side	23292F200
42	Plate, Left Side	23293F200
43	Nut, Flange 5/16''-18	15x79Z
44	Clamp, Battery	21761Z
45	Rod, Battery Clamp	21762Z
46	Locknut, Flange 1/4''-20	15x82
47	Panel, Left Side	91559F200
48	Panel, Right Side	91558F200
49	Screw	26x185
50	Bracket	23372
51	Locknut, Flange 5/16''-18	15x88
52	Running Board, Right	23394F200
53	Running Board, Left	21935F200
54	Mat, Running Board	91902
55	Bracket, Right	23390F200
56	Bracket, Left	23391F200
57	Bolt, Carriage 5/16''-18x5/8''	2x53
59	Bolt, Hex 1/4''-20x5/8''	1x38
60	Support, Front Running Board	24105F200
61	Guide, Belt	23826Z
62	Locknut 1/4''-20	15x66
63	Belt Guide, Stack Pulley	23789Z
64	Frame Channel	402064
65	Front Axle Assembly	21441F200
66	Pivot Pin	21469F200
67	Bolt, Carriage 3/8''-16x3/4''	2x60
68	Front Axle Hanger	23829F200
69	Pivot Bar Assembly	23088
70	Brace, Fuel Tank	91457F200
71	Tray, Battery	91895
72	Clamp, Drain Tube	91565
73	Tube, Battery Drain	91566
--	Assembly Parts Bag	91579
--	Instruction Book, Tractor	F-89711
--	Instruction Book, Mower Housing	F-88716
--	Decal Right Hood	58x832
--	Decal Left Hood	58x833
--	Decal Grille	58x834
--	Decal L.H. Seat Deck	
	Model No. 9-38211	43x257
	Model No. 9-38222	43x255
--	Decal R.H. Seat Deck	
	Model No. 9-38211	43x258
	Model No. 9-38222	43x256
--	Parts List	
	Model No. 9-38211	F-89707
	Model No. 9-38222	F-89709

* Parts that have an asterisk (*) in the description are included with Key No. 21.

www.mymowerparts.com

For Murray Parts Call 606-678-9623 or 606-561-4983

MODEL NOS.
9-38211 — 14 HP BRIGGS & STRATTON
9-38222 — 18 HP BRIGGS & STRATTON

MOTION DRI'

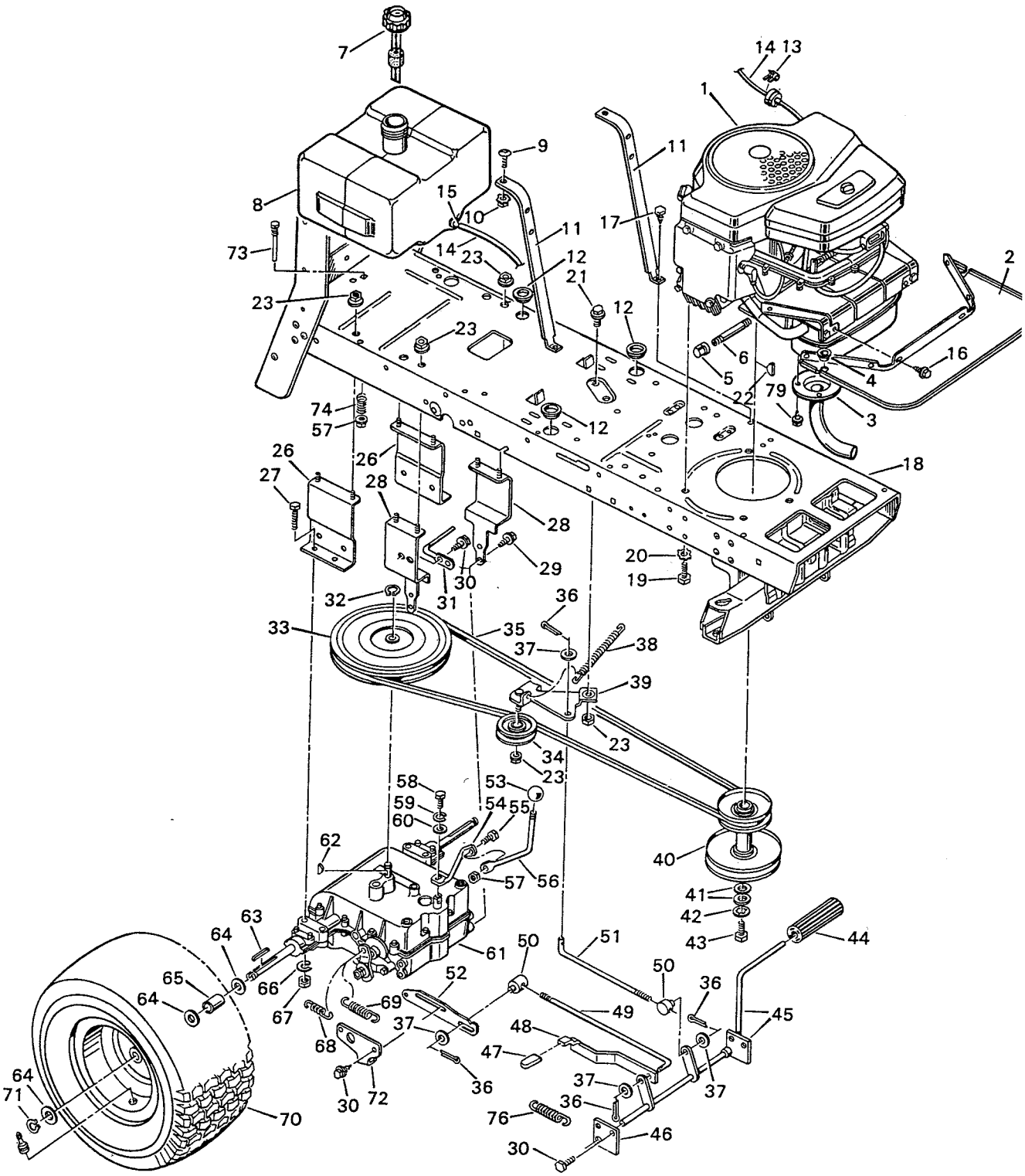

www.mymowerparts.com

For Murray Parts Call 606-678-9623 or 606-561-4983

MOTION DRIVE

MODEL NOS.
9-38211 — 14 HP BRIGGS & STRATTON
9-38222 — 18 HP BRIGGS & STRATTON

KEY NO.	DESCRIPTION	PART NO.
1	Engine*	- - - -
2	Baffle	91571E701
3	Exhaust Pipe	23743E701
4	Bushing	23857
5	Oil Drain Cap	21651
6	Oil Drain Extension	23783
7	Fuel Cap	23787
8	Fuel Tank	23396
9	Bolt, Carriage ¼''-20x¾''	2x67
10	Locknut, Flange ¼''-20	15x89
11	Support, Fuel Tank	24331E701
12	Grommet	21268
13	Clamp, Hose (Filter - Red)	23713
14	Fuel Line	23714
15	Clamp, Fuel Line (Gas Tank - Yellow)	91174
16	Screw, Tapping	25x2
17	Screw, Tapping 5/16''-¾''	26x197
18	Frame Channel	402064
19	Bolt, Engine Mount	25x6
20	Lockwasher	19x8
21	Bolt, Shoulder 3/8''-16x7/8''	9x15
22	Key, Woodruff No. 6	20062
23	Locknut, Flange 3/8''-16	15x84
25	Nut, Flange 5/16''-18	15x79
26	Bracket, Rear Transaxle	23154F200
27	Bolt, Hex 5/16''-18x2 3/8''	1x99
28	Bracket, Front Transaxle	24036F200
29	Screw, Formed 5/16''-1''	26x207
30	Screw, Tapping 5/16''-½''	26x49
31	Belt Guide	24030Z
32	Retainer Ring	11x7
33	Pulley, Drive	75073
34	Pulley, Idler	23339
35	Belt, Drive	37x11
36	Pin, Cotter	30x20
37	Washer	17x53Z
38	Spring, Extension	165x17
39	Idler Bracket Assembly	24035Z
40	Pulley, Engine Stack	90329Z
41	Washer	10851Z
42	Lockwasher	19x39
43	Bolt, Hex 3/8''-24x1''	1x20
44	Pedal, Clutch/Brake	21544
45	Lever Assembly, Clutch/Brake	91332F200
46	Bracket, Support	23358F200
47	Grip, Parking Brake	24235
48	Parking Brake Arm	24201Z
49	Rod, Brake	23375Z
50	Nut, Adjustable	21920
51	Rod, Clutch	24431Z
52	Plate, Brake Link	24425Z
53	Knob, Shift Lever	20739
54	Lever, Lower Shift	23157Z
55	Bolt, Hex 5/16''-18x1''	1x84
56	Lever, Upper Shift	23720Z
57	Locknut, Flange 5/16''-18	15x88
58	Bolt, Hex ¼''-28x5/8''	1x82
59	Lockwasher	18x32
60	Washer	17x37Z
61	Transaxle, Peerless (Model 801-016B)**	- - - -
62	Woodruff Key #9	20697
63	Key, Square 3/16''	21553
64	Washer	17x160
65	Tube, Rear Axle	87x63Z
66	Lockwasher	18x15
67	Nut, Hex 5/16''-18	15x2
68	Spring, Extension	165x20
69	Spring, Extension	165x41
70	Tire Only***	24430
--	Inner Tube	407065
--	Wheel Only	91627E804
--	Valve Stem and Cap	24373
71	E-Ring	11x3
72	Support, Link Plate	24426
73	Bolt, Guide	55826
74	Spring	164x1
76	Spring, Extension	165x58
79	Screw	26x203

* The engine model, type, and code numbers are on the engine. All parts to the engine are available from a Briggs & Stratton Authorized Service Center. See "Engines, Gasoline" or "Gasoline Engines" in the yellow pages of the telephone directory.

** Parts are available from a Tecumseh Authorized Service Center. See "Engines, Gasoline" or "Gasoline Engines" in the yellow pages of the telephone directory.

*** When you order a tire, make sure to give the brand name of the tire so that the tread pattern on the tire will match.

www.mymowerparts.com

For Murray Parts Call 606-678-9623 or 606-561-4983

MODEL NOS.
9-38211 — 14 HP BRIGGS & STRATTON
9-38222 — 18 HP BRIGGS & STRATTON

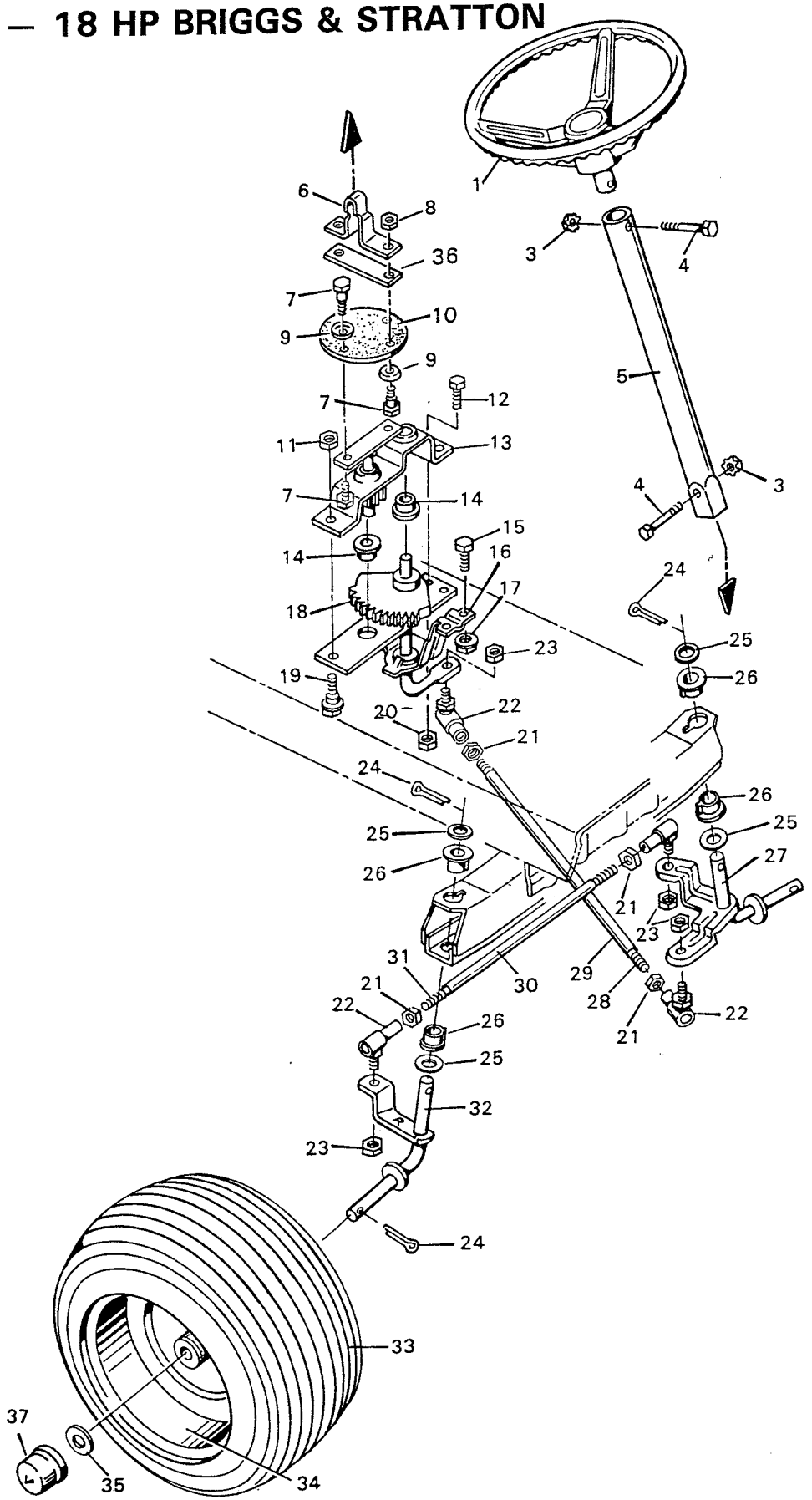

www.mymowerparts.com

For Murray Parts Call 606-678-9623 or 606-561-4983

STEERING

MODEL NOS.
9-38211 — 14 HP BRIGGS & STRATTON
9-38222 — 18 HP BRIGGS & STRATTON

KEY NO.	DESCRIPTION	PART NO.
1	Steering Wheel	91837
3	Keps Nut 5/16''-18	15x76
4	Hex Bolt 5/16''-18x1¾''	1x75
5	Steering Post	24345C
6	Upper Steering Coupling	21489F200
7	Shoulder Bolt	9x37
8	Flange Locknut ¼''-20	15x89
9	Formed Washer	91530
10	Coupling Plate	21490F200
11	Flange Locknut 3/8''-16	15x84
12	Hex Bolt 5/16'-15x5/8''	1x45
13	Steering Gear Bracket Assembly	21492F200
14	Bearing	20587
15	Hex Bolt 5/16''-15x5/8''	1x45
16	Steering Bracket	21693F200
17	Flange Locknut 5/16''-18	15x79
18	Steering Gear Assembly	21692F200
19	Hex Bolt 3/8''-16x¾''	1x85
20	Flange Locknut 5/16''-18	15x88
21	Hex Nut	15x61
22	Steering Ball Joint	21031
23	Flange Locknut 3/8''-24	15x87
24	Cotter Pin	30x49
25	Washer	17x83Z
26	Spindle Bearing	23820
27	Left Spindle Assembly	24229F200
28	Drag Link Rod	21482
29	Sleeve, Drag Link Rod (10'' Long)	156x1F200
30	Sleeve, Tie Rod (14'' Long)	156x2F200
31	Tie Rod	21475
32	Right Spindle Assembly	24228F200
33	Tire Only*	24376
34	Wheel Only	91633E804
--	Valve Stem & Cap	24373
--	Wheel Bearing	91334
--	Tire Tube	407047
35	Washer	17x115
36	Steering Disc	91529
37	Hub Cap - Optional	21662

* NOTE: For replacement parts, always give the name on the side of the tire so that the tread pattern of the tires will match.

www.mymowerparts.com

For Murray Parts Call 606-678-9623 or 606-561-4983

39 + 40

MOWER SUSPENSIO

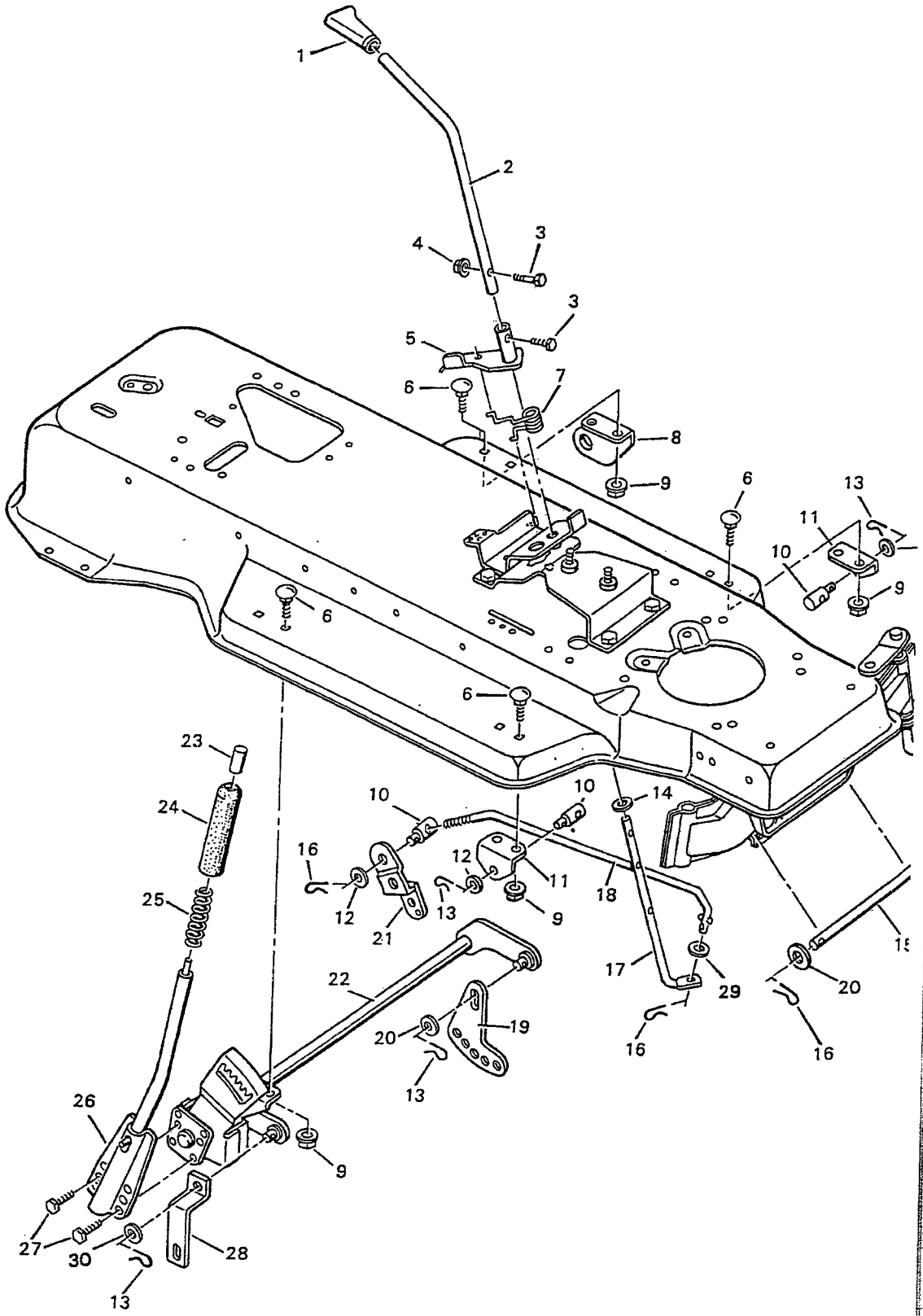

www.mymowerparts.com

For Murray Parts Call 606-678-9623 or 606-561-4983

MOWER SUSPENSION

KEY NO.	DESCRIPTION	PART NO.
1	Grip	55449
2	Lever, Blade Control	91781Z
3	Bolt, Hex	25x3
4	Locknut, Hex	15x67
5	Lever Assembly, Switch	91917F200
6	Bolt, Carriage	2x53
7	Spring, Torsion	166x32
8	Bracket, Left Rear Hanger	91737F200
9	Nut, Flange	15x79
10	Nut, Adjusting	21920
11	Bracket, Adjuster Rod	91747F200
12	Washer	17x124
13	Pin, Hair	31x4
14	Washer	17x67
15	Pin, Pull	90827Z
16	Pin, Hair	31x6
17	Lever, Lower Blade Control	91787F200
18	Rod, Blade Control	91795Z
19	Plate, Adjuster	91741E701
20	Washer	17x103
21	Bell Crank*	92033Z
22	Lifter Assembly	91771F200
23	Knob, Steel	91261
24	Grip	91398
25	Spring, Compression	164x21
26	Handle Assembly	91823F200
27	Screw	26x49
28	Link Suspension	91776E701
29	Washer	17x47Z
30	Washer	17x91Z

*If D.O.M. (see page 89) is prior to 0519, order Part No. 92033SE.

www.mymowerparts.com

For Murray Parts Call 606-678-9623 or 606-561-4983

38

MOWER HOUSII

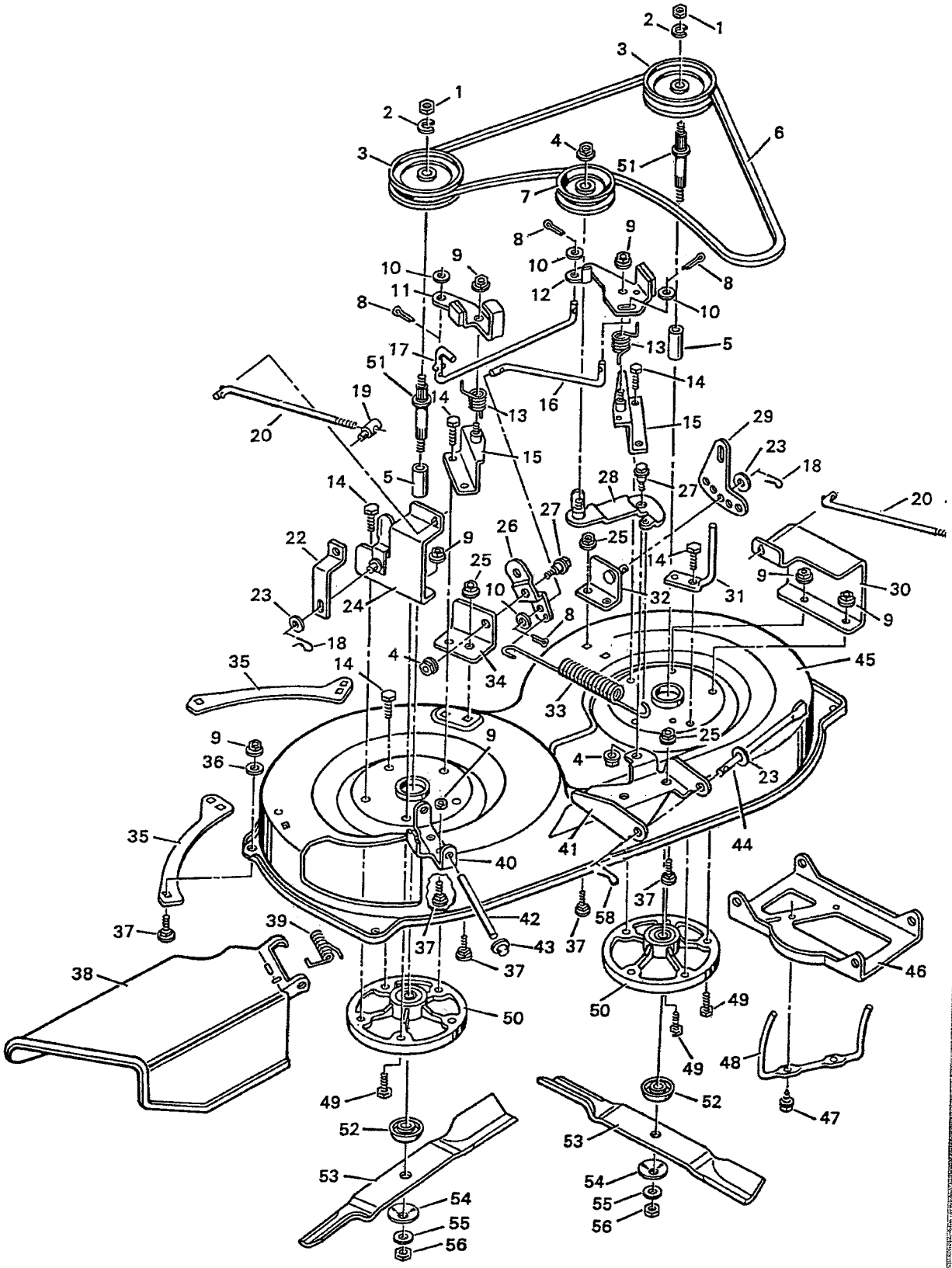

www.mymowerparts.com

For Murray Parts Call 606-678-9623 or 606-561-4983

MOWER HOUSING

KEY NO.	DESCRIPTION	PART NO.
1	Nut, Hex	15x101
2	Lockwasher	18x33
3	Pulley, Jackshaft	91769
4	Locknut, Flange	15x84
5	Spacer	91903
6	Belt, Blade Drive	37x63
7	Pulley, Idler	91801
8	Pin, Cotter	30x20
9	Locknut, Flange	15x88
10	Washer	17x46Z
11	Brake Assembly, Right	91819E701
12	Brake Assembly, Left	91818E701
13	Spring, Torsion	166x27
14	Bolt, Hex	25x6
15	Bracket Assembly, Brake	91811Z
16	Rod, Brake	91745Z
17	Rod, Cross Link	91740Z
18	Pin, Hair	31x4
19	Nut, Adjustable	21920
20	Rod, Adjuster	91748Z
22	Link, Suspension	91776E701
23	Washer	17x103
24	Bracket Assembly, Right Lifter	91812E701
25	Nut, Flange	15x79
26	Bell Crank*	92033Z
27	Bolt, Shoulder*	9x39
28	Arm Assembly, Idler*	92032
29	Plate, Adjuster	91741E701
30	Cover, Pulley	91792E701
31	Guide, Belt	91797Z
32	Bracket Assembly, Left Lifter	91813E701
33	Spring, Extension	165x72
34	Bracket, Pivot	91743E701
35	Plate	91770E701
36	Washer	17x57
37	Bolt, Carriage	2x53
38	Deflector Assembly, Chute	91982
39	Spring, Torsion	166x4
40	Bracket, Hinge	91765E701
41	Bracket, Front Hanger	91793E701
42	Rod, Deflector	91767Z
43	Cap, Push On	28x23
44	Rod, Hanger	91739Z
46	Hanger, Front	91746E701
47	Screw	26x214
48	Guide, Belt	91782Z
49	Bolt, Hex	1x84
50	Housing, Jackshaft	90905
51	Jackshaft	91922
52	Adapter, Blade	91926
53	Blade (2 required)	91742HT
54	Washer, Belleville	17x166
55	Washer	17x165
56	Nut, Hex	15x100
58	Pin, Hair	31x6
1-58	Complete Mower Housing Assy.	403228

*If D.O.M. (see page 89) is prior to 0519, refer to chart below.

KEY NO.	PART NO.
26	92033SE
27	9x12
28	92032SE

Deck Shell 91906

www.mymowerparts.com

For Murray Parts Call 606-678-9623 or 606-561-4983

42" MOWER HOUSING ILLUSTRATION FOR 9-38219, 9-38211, 9-38222, 9-39004

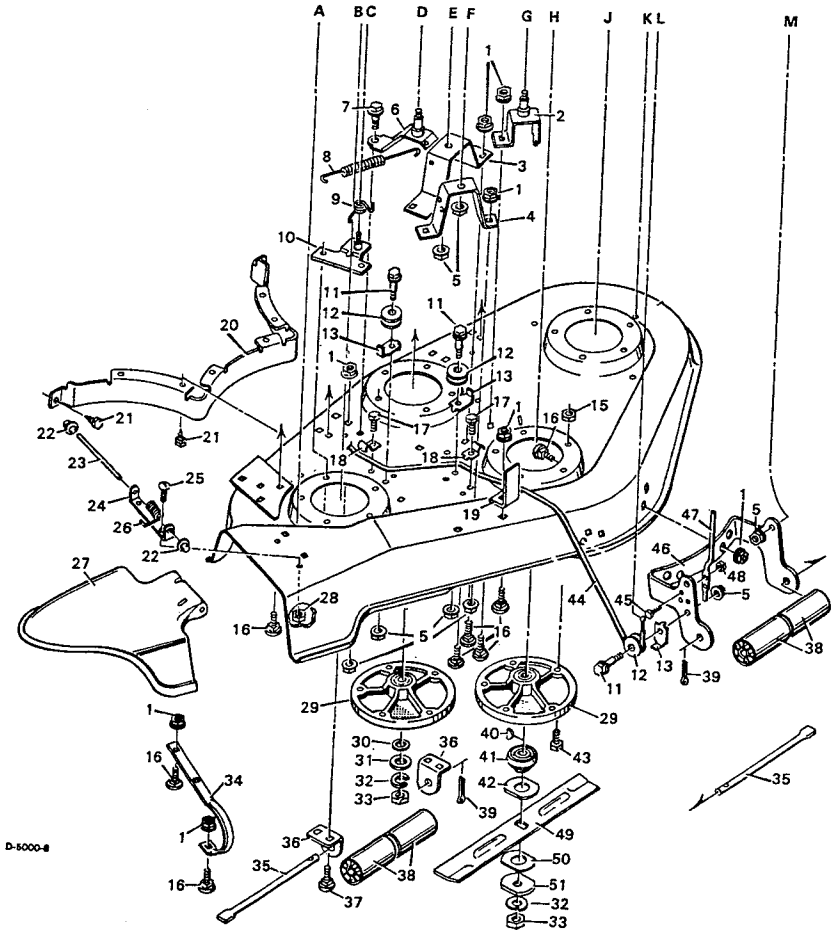

KEY NO.	DESCRIPTION	PART NO.
1	Nut, Flange 5/16"-18	15x79
2	Idler Assembly, Fixed	23177
3	Support, Idler*	23240
4	Support, Engagement Link	23241
5	Locknut, Flange 3/8"-16	15x84
6	Idler Assembly, Cross Drive	23178Z
7	Bolt, Shoulder 3/8"-16x7/8"	9x15
8	Spring, Cross Drive	165x60
9	Spring, Blade Brake Torsion	166x29
10	Bracket & Pin Assembly	91591Z
11	Bolt, Shoulder 3/8"-16	9x13
12	Pulley, Nylon	23187
13	Guide, Cable	23191Z
15	Locknut, Flange 5/16"-18	15x88
16	Bolt, Carriage 5/16"-18x3/4"	2x64
17	Screw, Tap	26x214
18	Guide, Cable	21953Z
19	Deck Stop	23782
20	Baffle, Mower Housing	23207
21	Screw	26x195
22	Cap, Push On	28x23
23	Rod, Deflector	23173Z
24	Bracket, Deflector	23172
25	Screw, Machine No. 10-24x5/8"	4x21
26	Spring, Torsion	166x4

KEY NO.	DESCRIPTION	PART NO.
27	Deflector, Mower Housing	23224
28	Locknut, Hex No. 10-24	15x81
29	Housing, Mandrel	90905
30	Washer	17x140
31	Washer	17x141
32	Lockwasher	18x27
33	Nut, Hex 1/2"-20	15x72
34	Skid	24070
35	Axle, Roller	23186Z
36	Support, Rear Roller	23208
37	Bolt, Carriage 5/16"-18x2-5/8"	2x53
38	Roller	23203
39	Pin, Cotter	30x49
40	Key, Woodruff No. 6	20062
41	Adapter, Blade	54211
42	Washer	24614Z
43	Bolt, Hex 5/16"-18x3/4"	1x84
44	Cable, Lifter	24470
45	Bolt, Hex 1/4"-20x7/8"	1x76
46	Support, Front Roller	24009
47	Guide, Curved Belt	24071Z
48	Locknut, Flange 1/4"-20	15x89
49	Blade (3 required)	24458HT
50	Washer	21673Z
51	Washer, Blade	20663Z
—	Housing Complete, Mower	403134

www.mymowerparts.com

42" MOWER HOUSING ILLUSTRATION
9-38219, 9-38211, 9-38222, 9-39004

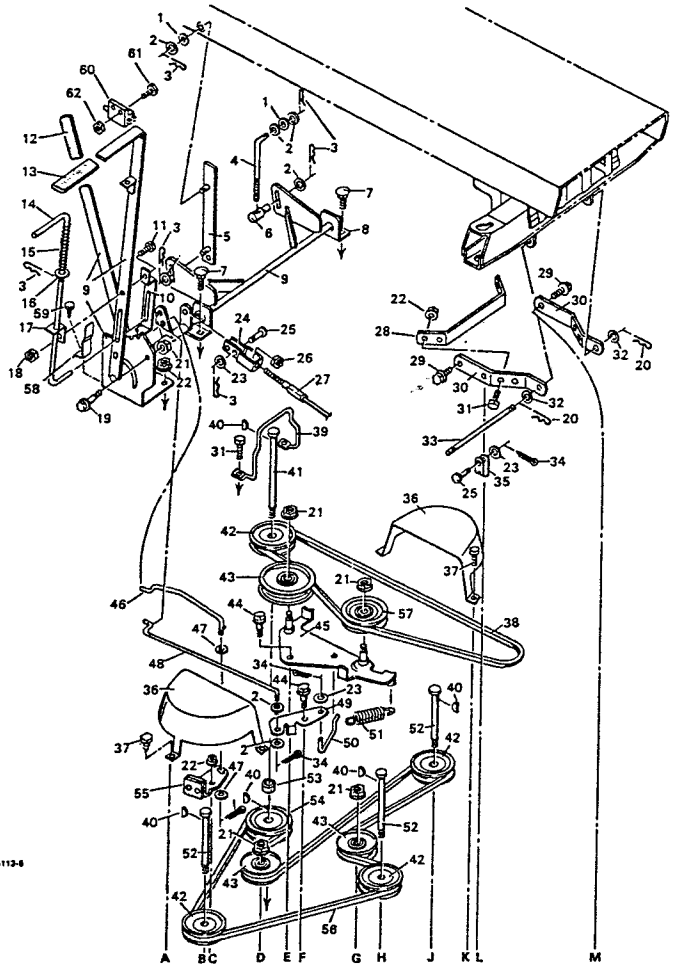

F-88716

KEY NO.	DESCRIPTION	PART NO.
1	Washer	10851Z
2	Washer	17x124
3	Pin, Hair	31x6
4	Rod, Adjuster 7-5/16" Long	23824
—	For 23 inch Diameter Rear Wheels	
4a	Rod, Adjuster 6-1/4" Long	23275Z
—	For 18 to 20 inch Diameter Rear Wheels	
5	Bracket, Right Hanger 6-3/8" Long**	23204Z
—	For 23 inch Diameter Rear Wheels	
5a	Bracket, Right Hanger 5-1/2" Long** For 18 to 20 inch Diameter Rear Wheels	23188Z
6	Nut, Adjustable	21920
7	Bolt, Carriage*	2x64
8	Support, Lifter*	23184
9	Lifter Assembly*	91482
10	Bracket, Guide	23192
11	Bolt, Hex 1/4"-20x7/8"	1x95
12	Grip, Engagement Lever	91573
13	Grip, Lifter Latch	23222
14	Latch, Lifter	23194Z
15	Spring, Lifter	164x4
16	Washer	17x53
17	Bracket, Lifter Guide	23193Z
18	Nut, Keps 1/4"-20	15x66
19	Bolt, Shoulder 3/8"-16	9x13
20	Pin, Hair	31x6
21	Locknut, Flange 3/8"-16	15x84
22	Locknut, Flange 5/16"-18*	15x88
23	Washer	17x47Z
24	Clevis, Adjusting	24471Z
25	Pin, Clevis	29x93
26	Nut, Hex 5/16"-18	15x2
27	Cable, Lifter	24470

18

KEY NO.	DESCRIPTION	PART NO.
28	Brace, Hanger	24472
29	Bolt, Shoulder	9x14
30	Arm, Support	23185
31	Bolt, Hex 5/16"-18x1"	1x84
32	Washer	17x57Z
33	Pin, Pull	21912Z
34	Pin, Cotter	30x20
35	Clevis	24073
36	Cover, Pulley	23231
37	Screw, Tap	26x214
38	Belt, Blade Drive	37x40
39	Guide, Belt	23751Z
40	Key, Woodruff No. 6	20062
41	Mandrel	23180
42	Pulley, Mandrel	20615
43	Pulley, Backside Idler	23238
44	Bolt, Shoulder 3/8"-16x7/8"	9x12
45	Idler Assembly, Blade Drive	23179
46	Rod, Brake	91593Z
47	Washer	17x46
48	Rod Assembly, Link	23232Z
49	Link, Engagement	23226Z
50	Rod, Engagement Link	23228Z
51	Spring, Blade Drive	165x43
52	Mandrel, Short	20616
53	Spacer	23213Z
54	Pulley, Mandrel	23739
55	Pad Assembly, Brake	91592
56	Belt, Cross Drive	37x22
57	Pulley, Idler	23211
58	Spring, Actuator	91480
59	Screw	25x2
60	Switch, Limit	91299
61	Screw, Machine #10-24x5/8"	3x141
62	Nut, Hex #10-24	15x102

** NOTE: These parts are measured from weld pin to weld pin.

For Murray Parts Call 606-678-9623 or 606-561-4983

WIRING DIAGRA

MODEL NOS.
9-38211 — 14 HP BRIGGS & STRATTON
9-38222 — 18 HP BRIGGS & STRATTON

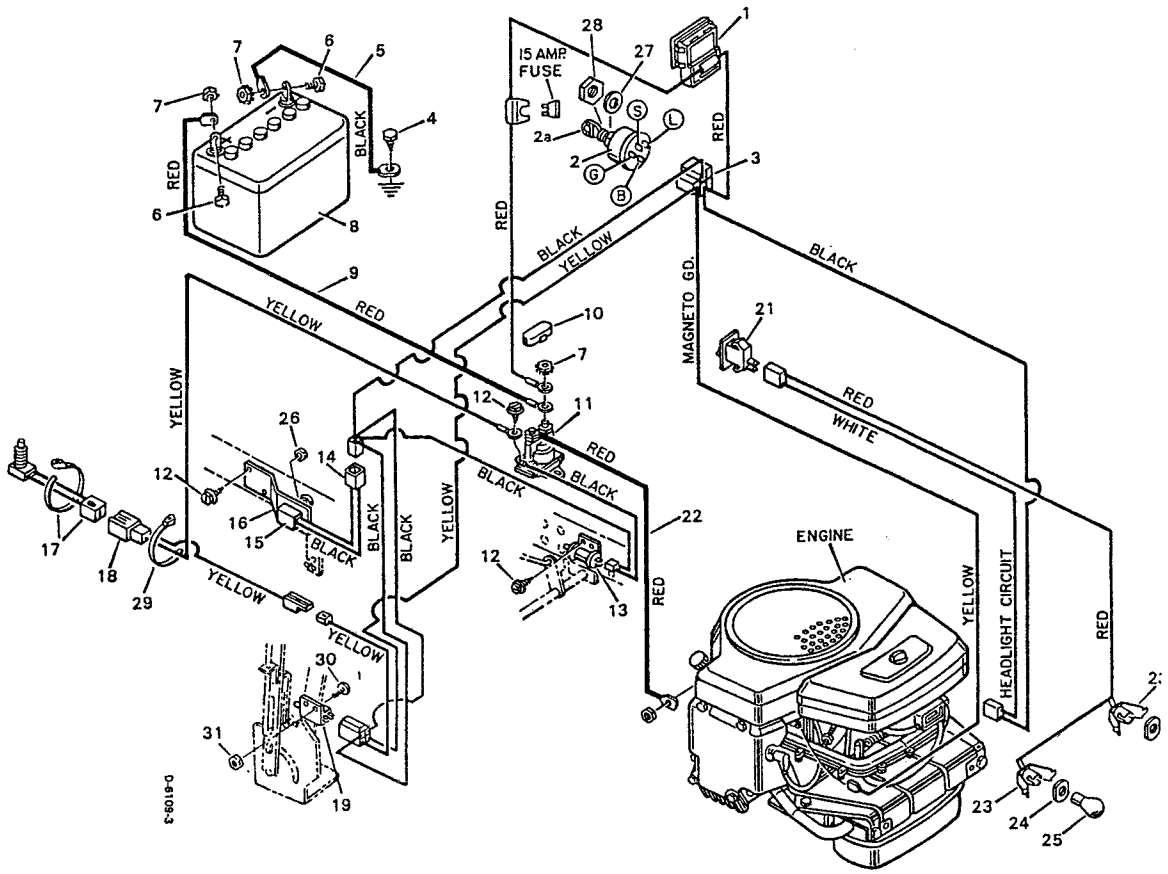

KEY NO.	DESCRIPTION	PART NO.
1	Ammeter Assembly	90729
2	Switch, Ignition	21064
2a	Key Only	20729
3	Wire Harness	250x9
--	Fuse, Auto Type	54212
--	Holder, Fuse	407078
4	Screw	26x49
5	Cable, Battery Ground	24x6
6	Bolt, Hex ¼''-20x⅝''	1x38
7	Nut, Keps ¼''-20	15x66
8	Battery Type U1-9	21075
--	Acid, Battery (Electrolyte)	90665
9	Cable, Battery (Solenoid to battery)	24x25
10	Cover, Solenoid	56049
11	Solenoid	24285
12	Screw, No. 10x½''	26x233
13	Switch, Clutch/Limit	21549
14	Switch, Attachment	91070
15	Shield, Switch	91071

KEY NO.	DESCRIPTION	PART NO.
16	Leaf Spring, Switch	91561
17	Switch, Seat Sensor	91031
18	Wire Harness - Seat Switch	250x1
19	Switch, Mower Housing	91299
21	Switch, Light	90647
22	Cable (Solenoid to Engine)	24x13
23	Socket Assembly, Light	90155
24	Washer, Light Socket	90228
25	Bulb, Lamp	90084
--	Clamp, Wire	21980
26	Nut, Hex ⅜''-24	15x33
27	Washer	19x40
28	Nut, Hex	15x10
29	Strap, Tie	32618
30	Screw, Machine #10-24x⅝''	3x141
31	Nut, Hex #10-24	15x102

www.mymowerparts.com