For Dixie Chopper Discount Parts Call 606-678-9623 or 606-561-4983

DIXIE CHOPPER

The World's Fastest Lawn Mower

Serial Numbers 8078925 and Higher

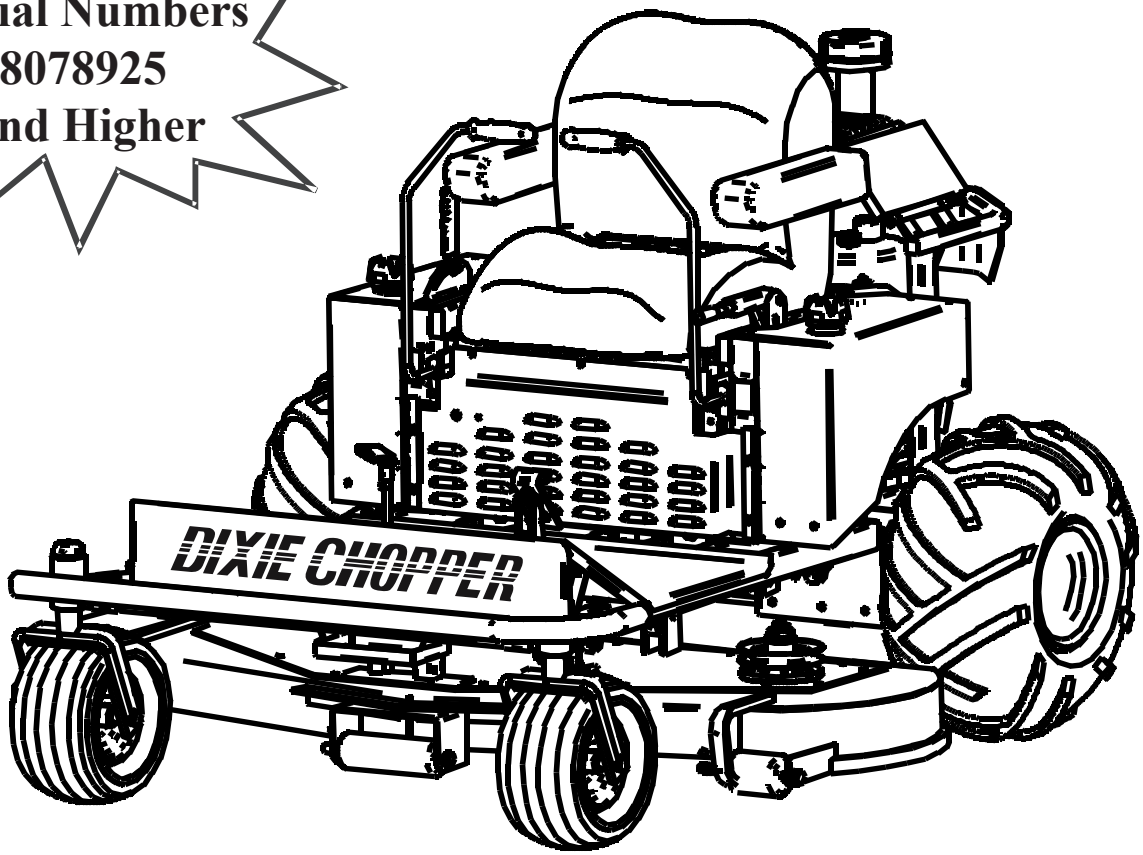

Model # _____ Engine Model # _____

Serial # _____ Engine Serial # _____

Date Purchased _____ Engine Spec. # _____

REALTREE 2760 PARTS MANUAL

700114 August, 2007

www.mymowerparts.com

For Dixie Chopper Discount Parts Call 606-678-9623 or 606-561-4983

DIXIE CHOPPER®

Congratulations on your purchase of a **DIXIE CHOPPER** lawn mower. We believe you have exercised excellent judgement, and are most appreciative of your patronage.

Your DIXIE CHOPPER Dealer is your *#1 SOURCE*
for
DIXIE CHOPPER parts and service !

Please call or visit your nearest authorized Dixie Chopper Dealer for
additional service information.

AUTHORIZED DEALER

Let us know how you are getting along with your new CHOPPER!
www.dixiechopper.com

Dixie Chopper reserves the right to make changes or add improvements to its products at any time without incurring any obligation to make such changes to products previously manufactured. Neither Dixie Chopper, nor its dealers, accept responsiblility for variations which may be evident in the actual specifications of its products and the statements and descriptions contained in this publication.

www.mymowerparts.com

For Dixie Chopper Discount Parts Call 606-678-9623 or 606-561-4983

DIXIE CHOPPER®

CONTENTS

QUICK REFERENCE PARTS	1
DECALS	2
DECAL PLACEMENT	5
FRAME	6
WHEELS & TIRES	7
FOOT PEDAL ASSEMBLY	8
DECK LIFT ASSEMBLY	9
ELECTRIC DECK LIFT ASSEMBLY	10
HUBS & BELTS	11
DECKS	12
OCDC	14
TRANSMISSION FRAME	15
TRANSMISSION & DRIVE	17
WHEEL MOTORS	18
HYDRAULIC HOSE DIAGRAM	19
FUEL SYSTEM	20
THROTTLE ASSEMBLY	21
BODY	22
BRAKE ASSEMBLY	24
GUARDIAN ENGINE	25
ELECTRICAL DIAGRAM	26
NOTES	27

www.mymowerparts.com

For Dixie Chopper Discount Parts Call 606-678-9623 or 606-561-4983

DIXIE CHOPPER

QUICK REFERENCE PARTS

MODEL	2760
Engine	Guardian 27Hp
Deck	60”
Left rear Tire/Rim Assembly	400259
Right rear Tire/Rim Assembly	400258
Rear Tire only	400153
Rear Rim only	400257
Front Tire/Rim	400253
Belts	
Engine Transmission Belt	2006B41R
Engine-Deck Belt	2006B88W
Deck Belt	2006B130R
Filters	
Fuel Filter	0F0106
Nelson Air Filter (Primary)	
Nelson Air Filter (Secondary)	
Zinga-Hydro Filter	68140
Donaldson Air (Primary)	0E3557
Donaldson Air (Secondary)	0E3656
Blades	
X-Blade	30227-60X
Various Parts BOTH MODELS	
Fiber Washer	W-101
Spindle Bearing (F/10161 Set-Up)	30218
Deck Roller (Ctr)	30240-0
Choke Control	20248
Throttle Cable	68249
Fuel Cap	600035
Control Lever Grip F/Throttle	20257

www.mymowerparts.com

For Dixie Chopper Discount Parts Call 606-678-9623 or 606-561-4983

DIXIE CHOPPER

DECALS

1

4

5

6

7

8

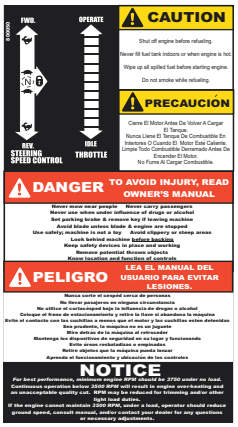

14

DANGER	OPERATOR CONTROLLED DISCHARGE CHUTE OCDC Safe operation of this vehicle is the sole responsibility of the operator. Safety is an ATTITUDE and it starts with you!

11

12

13

REF	PART#	DESCRIPTION	Qty
1	800172	Decal - RT2703 Model	
4	800008	HP + 1 Decal **(Back Of Seat or Rear Guard)**	1
5	65413	Patent Pending **(T-Box)**	1
6	800157	Oil Gearbox Check	1
7	800015	Choke	1

REF	PART#	DESCRIPTION	Qty
8	800014	Ignition	1
11	97072	OCDC Decal	1
12	800018	Docu-Tube Decal	1
13	97514	Horn Warning	1
14	800050	Right Fender Combo f/Cooler	1

www.mymowerparts.com

For Dixie Chopper Discount Parts Call 606-678-9623 or 606-561-4983

DIXIE CHOPPER

DECALS (CONT'D)

15

16

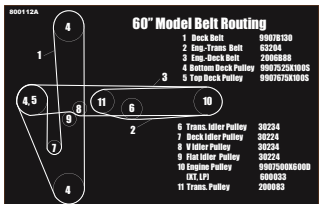

17

20

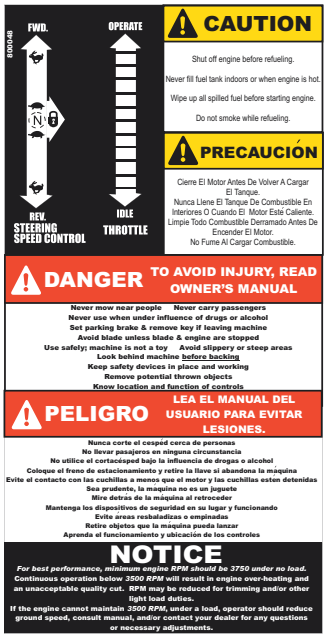

21

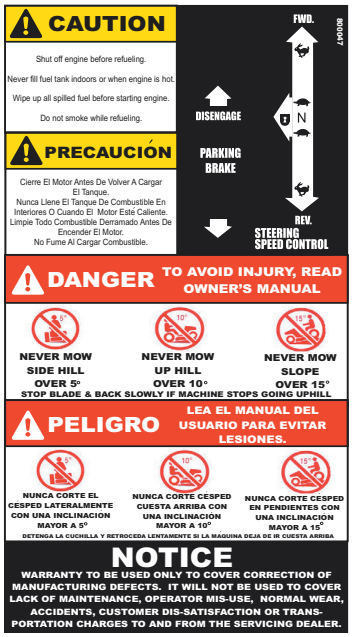

22

24

REF	PART#	DESCRIPTION	Qty
15	800061	Lusas Oil Decal	1
16	65409	60" Cut Decal	2
17	800112A	Belt Information F/60"	1
20	30229	Deck Danger Decal	2

REF	PART#	DESCRIPTION	Qty
21	800048CAM	Decal - Right Fender	1
22	800047CAM	Decal - Left Fender	1
24	800060	Lucas - Decal Hub (Left Side Fender)	1

www.mymowerparts.com

For Dixie Chopper Discount Parts Call 606-678-9623 or 606-561-4983

DECALS (CONT'D)

25

26

27

28

29

30

REF	PART#	DESCRIPTION	Qty
25	800174	Decal - Team Real	3
26	800173	Fender Decal	4
27	800118	Decal - Elec. Deck Lift Indicator Height	1
28	97014	Idler Position Decal (Triangle Plate On Deck	1
29	800059	Dixie Power - Torque Decal	1
30	97008	Cross Member Decal (Bottom of Cross-member of machine	

www.mymowerparts.com

For Dixie Chopper Discount Parts Call 606-678-9623 or 606-561-4983

DIXIE CHOPPER

DECAL PLACEMENT

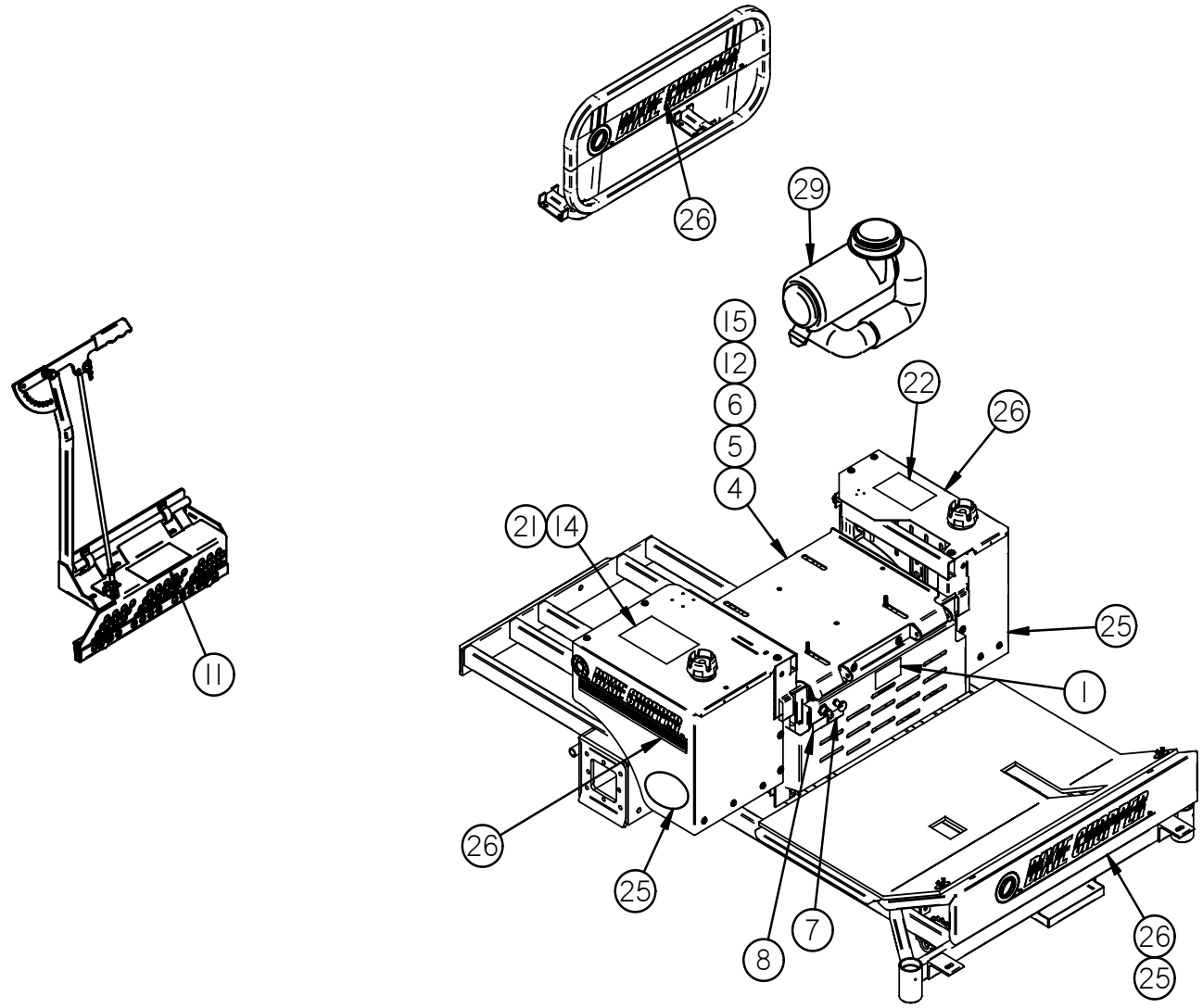

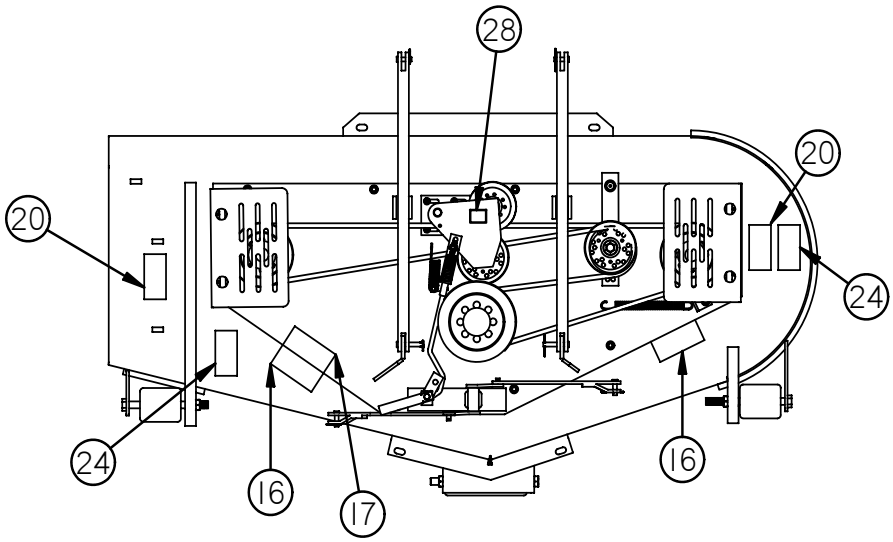

www.mymowerparts.com

For Dixie Chopper Discount Parts Call 606-678-9623 or 606-561-4983

DIXIE CHOPPER

FRAME

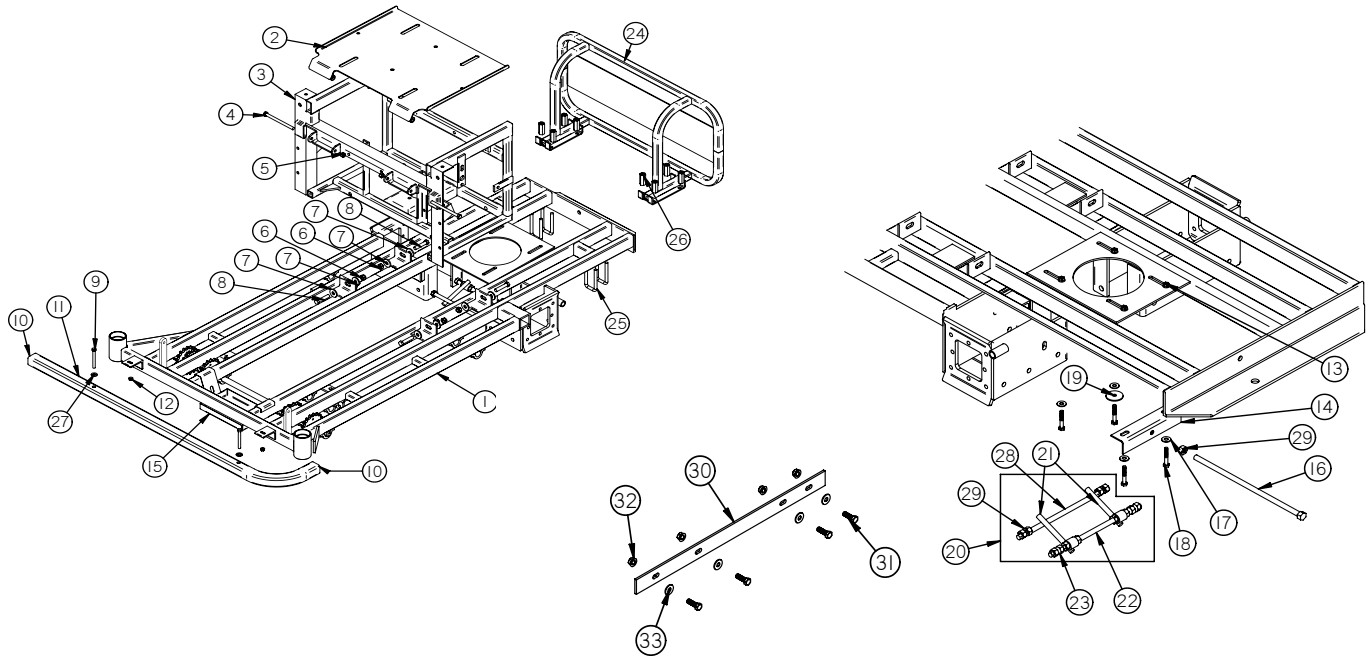

REF	PART#	DESCRIPTION	Qty
1	100025	Weldment - 50/60 Frame	1
2	400171	Weldment - Low Ride Seat Pan w/ Hinge	1
3	100007	Weldment - Low Ride Transmission Frame	1
4	B-229	3/8”-16 x 5” Bolt	2
5	N-107	3/8”-16 Nyloc Nut	2
6	N-135	7/16”-20 Nyloc Nut	4
7	W-168	7/16” Hardened Flat Washer	8
8	B-199	7/16”-20 x 2” Bolt	4
9	B-165	3/8”-16x2” Bolt	2
10	97169	Plastic Cap	2
11	10100-ST	Bumper - Square	1
12	N-108	3/8”-16 Whiz Flange Nut	2
13	N-103-W	5/16”-18 Whiz Flange Nut	4
14	72216CAM	Pull Stop Weldment	1

REF	PART#	DESCRIPTION	Qty
15 15A 15B	400065 B-190 N-108	Tray - Standard Battery Box 3/8”-16x1 1/2” Carriage Bolt 3/8”-16 Whiz Flange Nut	1 2 2
16	B-280	1/2”-13x14” Engine Adjustment Bolt	1
17	W-113	5/16” Standard Flat Washer	4
18	B-156	5/16”-18x2” Bolt	4
19	W-107	3/8” ID. x 1 5/8” OD. Bellville Washer	1
20	72220	Belt Guide Assembly **(Incl # 21-23,28,29)**	
21	72217	Belt Guide Weldment	2
22	72222	1/2”-13x12 1/2” All Thread	1
23	N-110	1/2”-13 Nut	6
24	400074	25Hp Kohler Crash Guard	1
25	B-204	3/8”-16 U-Bolt	4
26	N-160	3/8”-16 Coupling Nut	8
27	W-160	10MM Flat Washer	2
28	72222	1/2”-13x12 1/2” All Thread	1
29	N-110	1/2”-13 Nut	1
30	97024	Crossmember	1
31	B-123	1/2”-13x1 1/2” Bolt	4
32	N-157	1/2”-13 Whiz Flange Nut	4
33	W-109	1/2” Flat Washer	4

www.mymowerparts.com

For Dixie Chopper Discount Parts Call 606-678-9623 or 606-561-4983

DIXIE CHOPPER

WHEELS & TIRES

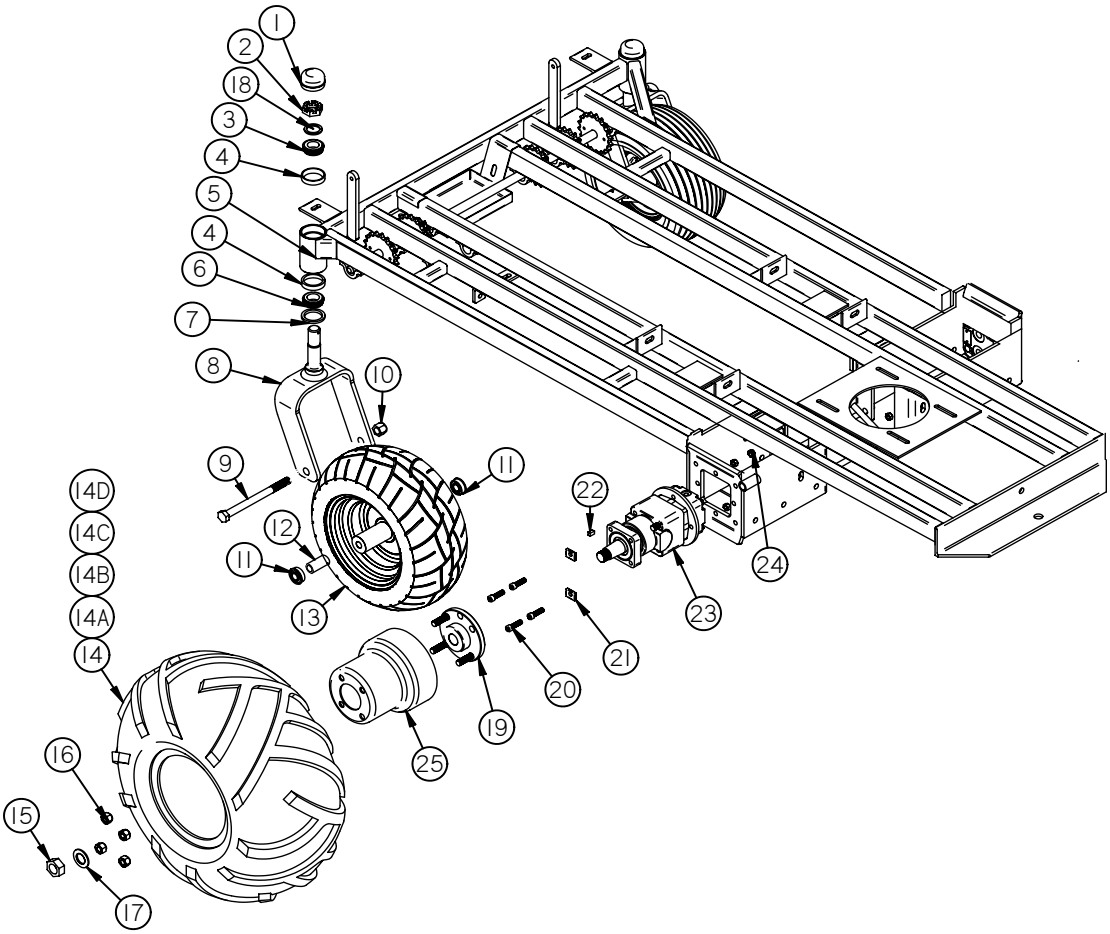

REF	PART#	DESCRIPTION	Qty
1	10220	Dust Cap	2
2	N-183	1”-14 Nyloc Jam Nut	2
3	10207	Top Bearing	2
4	10206	Outer Bearing Race	4
5	F-100	3/8” Drive-In Grease Fitting	2
6	97171	Bottom Bearing	2
7	10208	Seal	2
8	100090	Front Fork Weldment	2
9	B-122	Bolt - 5/8”-11x7”	2
10	N-115	Nut - 5/8”-11 Nyloc	2
11	400275	Bearing	4
12	400276	Spacer	2
13	400232	Front Wheel Assembly	2

REF	PART#	DESCRIPTION	Qty
14 14A 14B 14C 14D	400259 400258 400153 400257 10127-S	24-11x10 Turf Boss IV Assembly (Right) 24-11x10 Turf Boss IV Assembly (Left) Turf Boss IV Tire Only Rim Valve Stem	1 1
15	PB339303	Wheel Motor Axle Nut	
16	N-113	1/2”-20 Wheel Lug Nut	8
17	W-137	1”x2” Belleville Washer	2
18	W-131	1” ID x 1 1/2” OD x 1/8” Thick	2
19	67002	Wheel Flange w/studs	2
20	B-183	1 1/4” x 3/8” Allen Head Wheel Motor Bolt	8
21	W-138	3/8” ID. x 1” OD. Wheel Motor Square	4
22	PW72546	1/4” Key	
23	67114 200018	Wheel Motor 14Cu.In.	
24	N-127	3/8” Fine Thread Lock Nut	8
25	67266	Brake Drum	2
	68211	Tire Sealant (1 liter Bottle) **Optional** Rear Tire (2 Liter Optional)	

www.mymowerparts.com

For Dixie Chopper Discount Parts Call 606-678-9623 or 606-561-4983

DIXIE CHOPPER

FOOT PEDAL ASSEMBLY

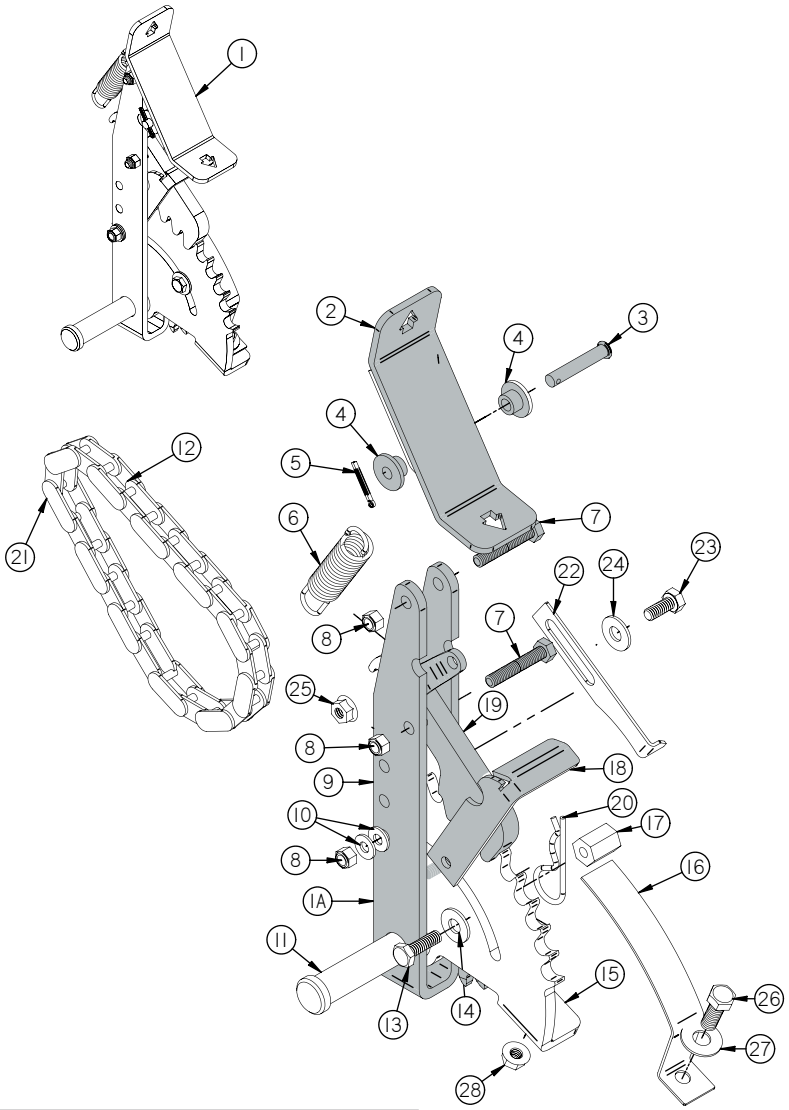

REF	PART#	DESCRIPTION	Qty
1	100136	Assembly - Foot Pedal (Inc. 1A,11,15,16,22)	1
1A	100136-DCM	Weldment - Foot Pedal	1
2	100143	Weldment - Pad Pedal Foot	1
3	P-121	Pin - 5/16” X 1-3/4” Clevis	1
4	20222	Bushing - Nylon	2
5	P-108	Pin - 3/32” X 1-1/2” Cotter	1
6	100151	Spring - Pedal Foot	1
7	B-105	Bolt - 5/16”-18 X 1-3/4” Full Thread	2
8	N-131	5/16”-18 Nyloc Nut	3
9	100137	Weldment - Arm Lift 2006	1
10	W-164	5/16” Spring Washer	2
11	100152	Pin - Pedal Foot	1
12	68219	#50 Chain (Incl Ref. #20)	1
13	B-131	5/16”-18 X 1” Bolt	1
14	W-113	5/16” Standard Flat Washer	1

REF	PART#	DESCRIPTION	Qty
15	100146	Weldment - Sprocket Quarter	1
16	100150	Indicator - Control Height	1
17	N-130	5/16”-18 X 3/4” Coupling Nut	1
18	100153	Lock - Pedal **(Incl. #8,10)**	1
19	100156	Pawl - Pedal Foot	1
20	30213	#27 Hair Clip Pin	1
21	10232	#50 Master Link	1
22	300008	Pointer - Height Deck	1
23	B-107	5/16”-18 X 3/4” HHCS Bolt	1
24	W-113	5/16” Flat Washer	1
25	N-103-W	5/16”-18 Whiz Flange Nut	1
26	B-108	3/8”-16 X 1” HHCS Bolt	1
27	W-104	3/8” Flat Washer	1
28	N-108	3/8”-16 Whiz Flange Nut	1

www.mymowerparts.com

For Dixie Chopper Discount Parts Call 606-678-9623 or 606-561-4983

DIXIE CHOPPER

DECK LIFT SYSTEM

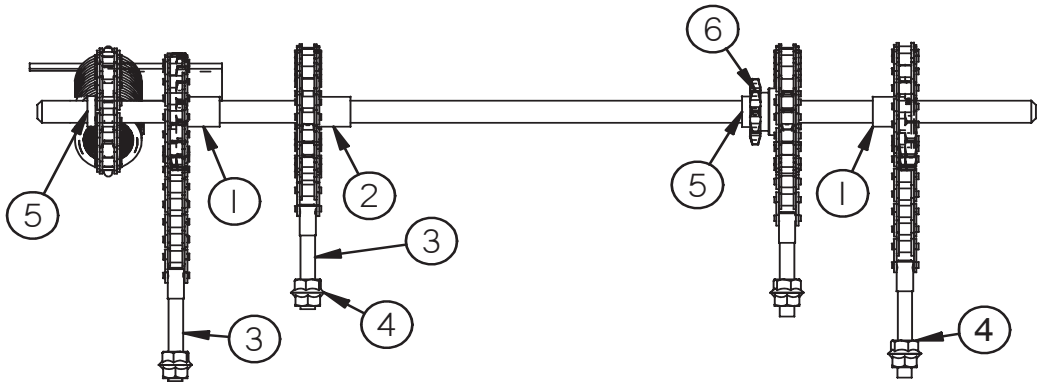

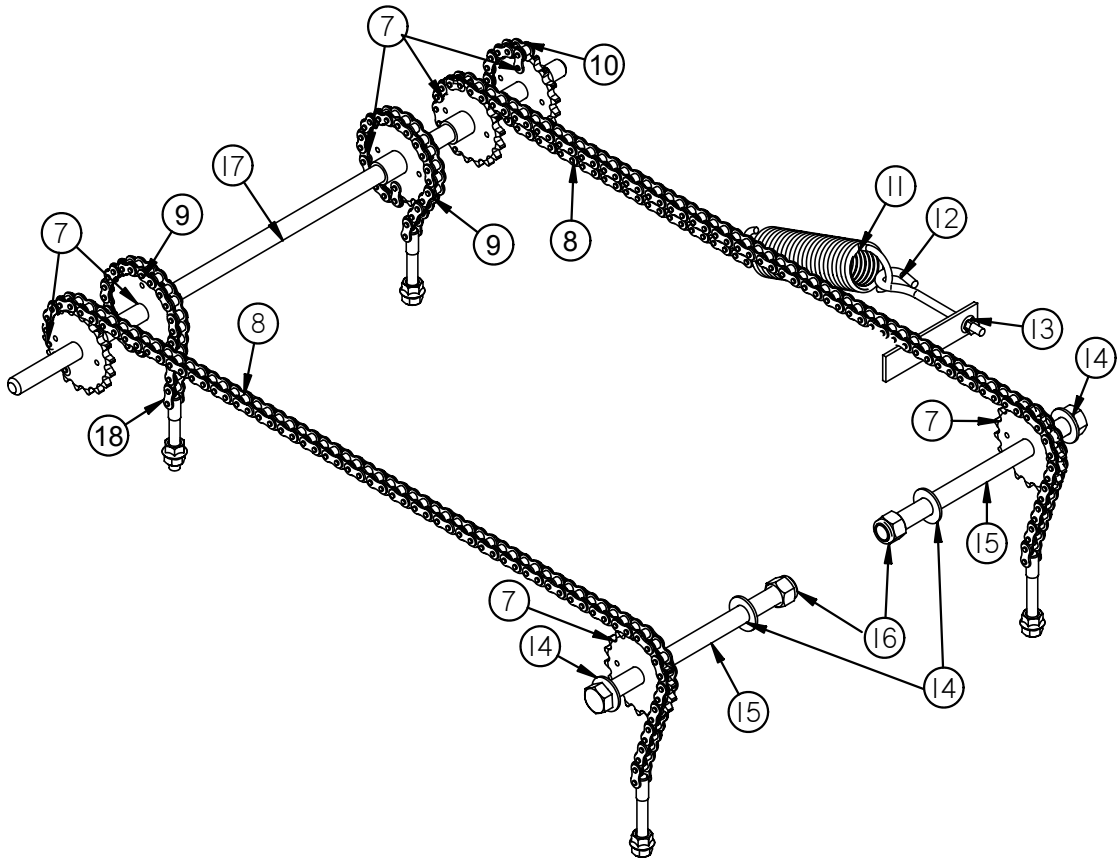

REF	PART#	DESCRIPTION	Qty
1	68112	1” Bushing	2
2	68106	1 3/16” Bushing	1
3	S-114	1/2”-13 Stud	4
4	N-157	1/2”-13 Whiz Flange Nut	8
5	68105	3/8” Bushing	2
6	68104	#50 Small Sprocket	1
7	68103	Deck Lift Sprocket #50	7
8	990710003	#50 Rear Deck Lift Chain	2
9	68217	#50 Front Deck Lift Chain	2
10	990710002	#50 Return Spring Chain	1

REF	PART#	DESCRIPTION	Qty
11	97455	200 lb. Return Spring	1
12	B-241	3/8”-16 Eye Bolt	1
13	N-108	3/8”-16 Whiz Flange Nut	1
14	W-154	3/4” Flat Washer	4
15	B-237	3/4”-9x7.5” Bolt	2
16	N-158	3/4”-9 Nyloc Nut	2
17	68114	3/4”x28” Rod	1
18	10232	#50 Master Link	10

www.mymowerparts.com

For Dixie Chopper Discount Parts Call 606-678-9623 or 606-561-4983

DIXIE CHOPPER

ELECTRIC DECK LIFT

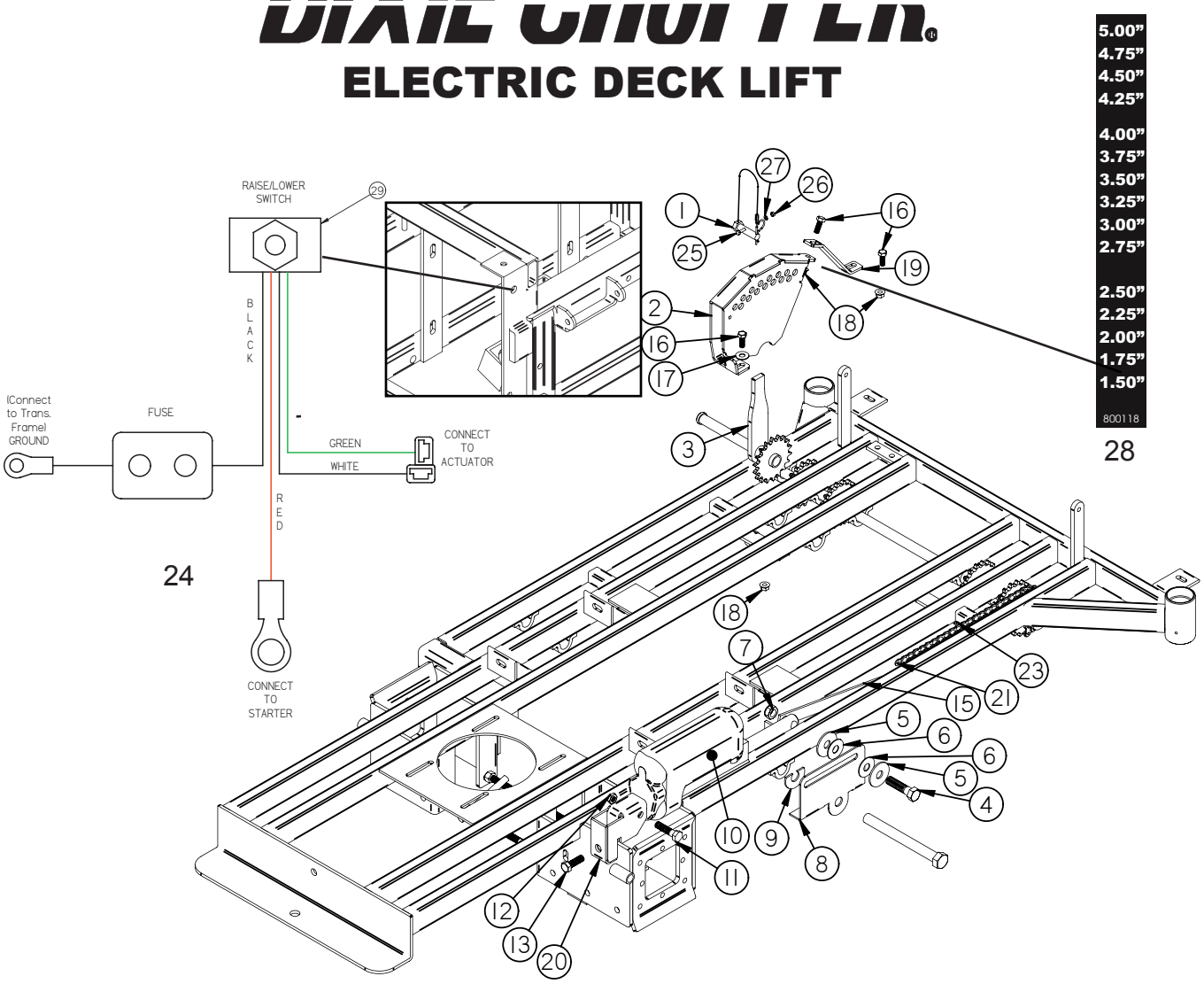

REF#	PART#	DESCRIPTION	QTY
	300235 900235	Kit - Electric Deck Lift 50/60 Frames Kit - Hardware **(Inc. Items in Grey)**	1
1	300250B	Pin-Clevis 1/2” w/Lanyard and Clip	1
2	300236	Weldment-Housing Adjustment Height	1
3	300240	Weldment-Arm Sprocket	1
4	B-181	Bolt-5/8”-11 x 2.5 HHCS	1
5	W-156	Washer-9/16” Flat	2
6	W-140	Washer-5/8” Nylon Flat	2
7	N-156	Nut-5/8”-11 Nyloc Jam	1
8	300244	Bracket-Mounting Front Actuator	1
9	300249	Shim-.875 ID	1
10	500039	Actuator-Lift Deck Electric 2006	1
11	B-210	Bolt-1/2”-13 x 2” HHCS	1
12	N-126	Nut-1/2”-13 Nyloc Jam	1
13	B-123	1/2”-13 x 1 1/2” HH Bolt	1
15	300248CAM	Arm-Chain Actuator	1

REF#	PART#	DESCRIPTION	QTY
16	B-108	Bolt-3/8”-16 x 1” HHCS	3
17	W-104	Washer-3/8” Flat	1
18	N-108	Nut-3/8”-16 Whiz Flange	3
19	300239	Brace-Support Housing Adj. Height	1
20	300245	Weldment-Bracket Mounting Rear Actuator **(50/60)**	1
21	10232	#50 Master LInk	2
22	68142	Cap - Plastic 1” Sq. Plug	1
23	990710002	#50 Return Spring Chain	1
24	500040	Harness - Lift Deck Elec. **(Inc. #29)**	1
25	B-258	M5-.8X16mm HHCS Bolt	1
26	N-179	M5 - .8 HH Nut	1
27	W-175	M5 Flat Washer	1
28	800118	Decal - Height Indicator	1
29	500051	Toggle Switch	

www.mymowerparts.com

For Dixie Chopper Discount Parts Call 606-678-9623 or 606-561-4983

DIXIE CHOPPER

HUBS AND BELTS

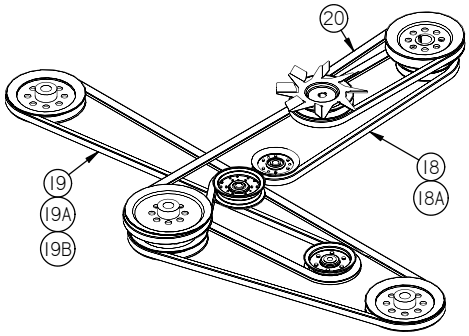

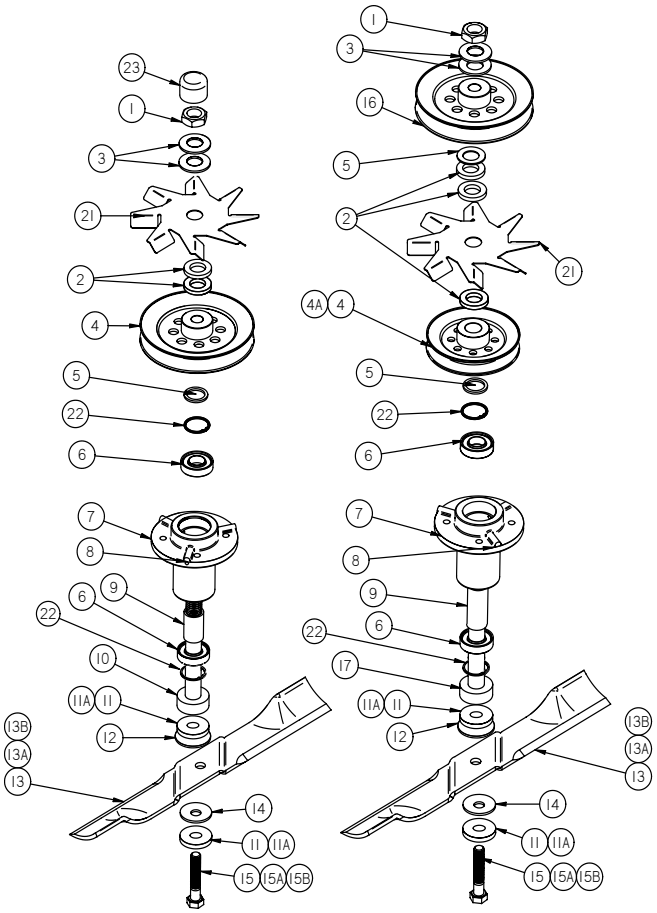

REF	PART#	DESCRIPTION	Qty
	10161 10161-L	Outside Complete Spindle Asm. Center Complete Spindle Asm.	
	10161-HD (Opt.) 10161-LHD (Opt.)	Heavy Duty Outside Complete Only Heavy Duty Center Complete Only	
1	N-167	1” Nut	3
2	W-146	1/4” Washer	7
3	W-137	1” Belleville Washer	6
4	9907525X100S	5.25” Pulley	3
5	W-131	1/8” Washer	4
6	30218	Sealed Bearing	
7	30241	Deck Hub **(2 Snap Rings, 2 Bearings & 1 Spacer)**	3
8	F-102	Grease Fitting	3
9	30219	Inner Deck Hub Spacer	
10	30217	Short Blade Shaft	2
11	W-182 30242	2” OD x .656 ID x 1/4” Thick Washer 1/2” Blade Spacer (Use when H & N blade are used)	3
12	W-101	Fiber Washer	3
13 13A 13B	30227-60X 30227-60H 30227-60N	60” X Style Blade 60” Standard High Lift Blade **(Optional)** 60” Heavy Duty High Lift Blade **(Optional)**	3

REF	PART#	DESCRIPTION	Qty
14	W-100	5/8” Belleville Washer	3
15 15A 15B	B-121 B-121-L B-121-LL	2.5” Blade Bolt (use w/o blade spacer) 3” Blade Bolt (use with blade spacer) 3.25” Blade Bolt (use with Whiz-Mow)	3
16	9907675X100S	6.75 Pulley	1
17	30217-L	Long Blade Shaft	1
18	2006B88W	Engine - Deck Belt	1
19	2006B130R	Deck Belt	1
20	2006B41R	Engine-Trans. Belt B-41	1
21	300058	Fan - 1” x 8 1/4” Steel Gray & Decal	3
22	788080	Retainer Ring	
23	67255	Spindle Hub Caps	2

www.mymowerparts.com

For Dixie Chopper Discount Parts Call 606-678-9623 or 606-561-4983

DIXIE CHOPPER

60” DECK

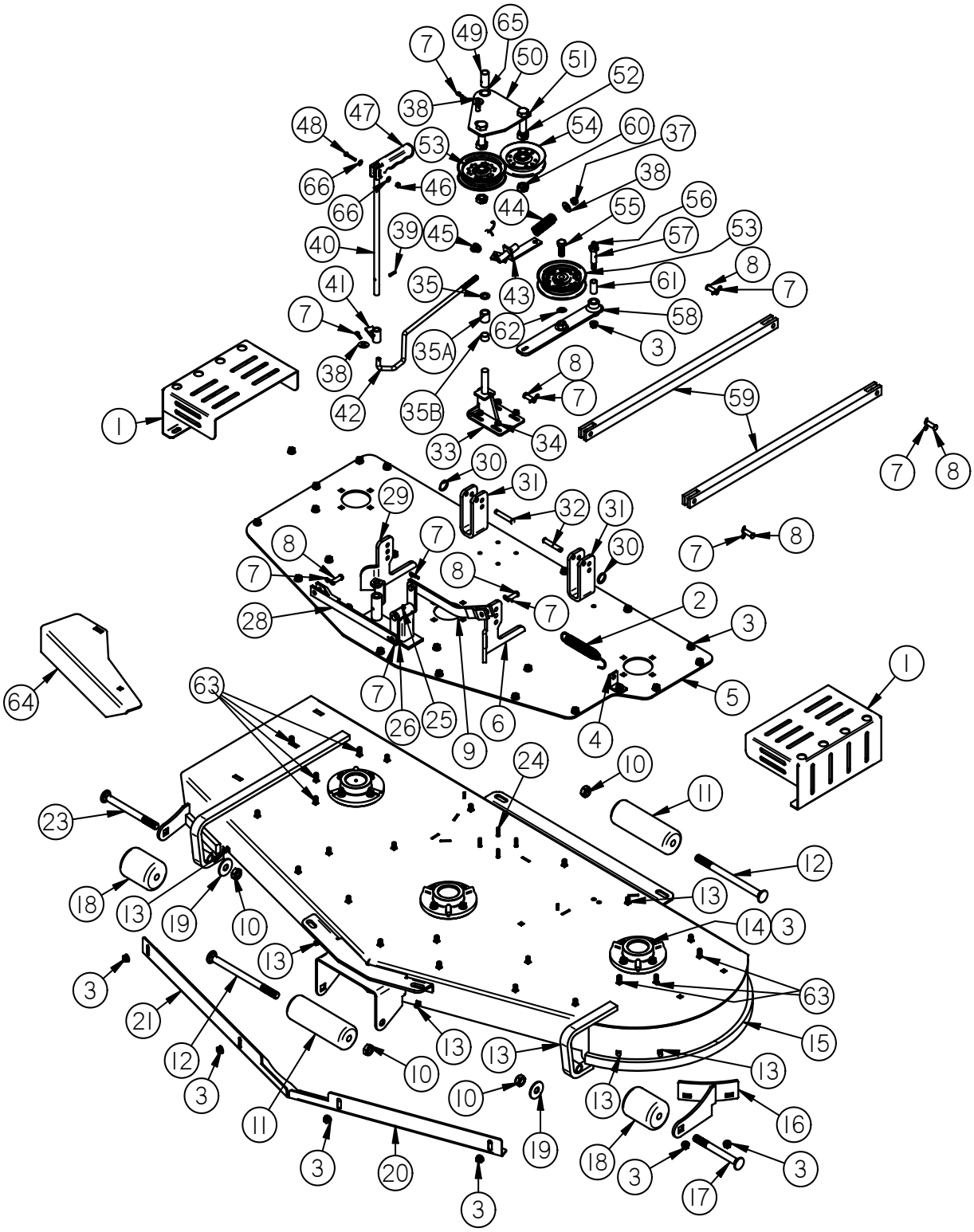

www.mymowerparts.com

For Dixie Chopper Discount Parts Call 606-678-9623 or 606-561-4983

DIXIE CHOPPER

60” DECK

REF	PART#	DESCRIPTION	Qty
	300195	**2006 60” Deck Assembly**	
1	300056	Pulley Guard	2
2	300324	Spring	1
3	N-108	3/8” Whiz Flange Nut	37
4	65308-L	Idler Spring Tab	1
5	300347	2006 60” Top Plate Weldment	1
6	300229	Left 3-Hole Tab	1
7	20224	Hairpin Clip	10
8	P-102	3/8”x1.25” Clevis Pin	6
9	30232	Left Scissor Arm	1
10	N-156	5/8”-11 Nyloc Jam Nut	4
11	30240-O	Long Roller (7.5” Long)	2
12	B-255	5/8”-11x9” Carriage Bolt	2
13	B-110	3/8”-16x3/4” Carriage Bolt	17
14	B-136	3/8”-16x1.25” Carriage Bolt	12
15	300343	2006 60” Deck Weldment	1
16	300333	2006 Weldment - Roller Bracket	1
17	B-253	5/8”-11x6” Carriage Bolt	1
18	67240	Short Roller (3.75” Long)	2
19	W-135	5/8” Flat Washer	2
20	300345	2006 Left 60” Bolt-On Blow Out Baffle	1
21	300344	2006 Right 60” Bolt-On Blow Out Baffle	1
23	B-254	5/8”-11x7” Carriage Bolt	1
24	B-172	1/4”-20x1” Bolt	4
25	F-100	3/16” Drive in Grease Fitting	2
26 27	67131	Scissor Link Tower Weldment Enguaging Tower Weldment	1 1
28	30231	Right Scissor Arm	1
29	300228	Right 3-Hole Tab	1
30	C-104	Ring Clip	2
31	334000130109	2-Hole Tab	2
32	P-103	3/8” x 2” Clevis Pin	2
33	300349	Pivot Stand	1
34	N-102	1/4”-20 Whiz Flange Nut	4

REF	PART#	DESCRIPTION	Qty
35	30112 10203 65278	1/8” Shim (if needed) 1” Shim (if needed) 1/2” Shim (if needed)	* * *
37	N-107	3/8 -16 Nylon Lock Nut	1
38	W-104	3/8” Flat Washer	3
39	P-113	Roll Pin	1
40	30211	Enguaging Shaft	1
41	30210	Cam Weldment	1
	30209-1	Enguaging Rod Assembly (Inc. #37,38,42,43,44)	
42	97343	Enguaging Rod	1
43	30209-B	Connecting Arm Bracket	1
44	30207-S	Enguaging Spring	1
45	20217-25	Return Spring	1
46	N-173	#10-24 Nyloc Nut	1
47	30212	Enguaging Handle (Coated)	1
48	B-298	#10-24x1 1/4” SHCS Zinc	1
49	30206	5/8”x3/4”x1 1/2”Bushing	1
50	300012	Triangle Plate Assembly (Incl.#49,65)	
51	B-185	5/8”-11 x 2” Bolt	2
52	N-180	5/8”-11 Jam Lock Nut	2
53	30224	Flat Idler Pulley	2
54	30234	V Pulley	1
55	B-117	1/2”-13x1.25” Bolt	1
56	F-101	1/4”-28 90 Grease Fitting	1
57	B-118-G	1/2 x 1 1/2 Shoulder Bolt **(Incl.- Ref. #56)**	1
58	30223	Idler Arm	1
59	30214-86	Stabilizer Bar	2
60	N-181	5/8 - 11 Lock nut	2
61	65276	Bronze Bushing 1/2”x5/8”x1 1/2”	1
62	W-112	1/2” Lock Washer	1
63	B-135	3/8”-16x1” Bolt	9
64	300332	Baffle - Wiper Blade F/60”	1
65	F-102	Fitting - Grease 1/4”-28	1
66	W-186	#10 Flat Washer	2
	300048	Deck Pulley Guard Kit F/Fan Set-Up **(Optional)**	

*Use individually or a combination of 10203, 65278 and 30112 to achieve proper belt alignment between the triangle plate and the top center deck spindle pulley.

www.mymowerparts.com

For Dixie Chopper Discount Parts Call 606-678-9623 or 606-561-4983

DIXIE CHOPPER

60” OCDC

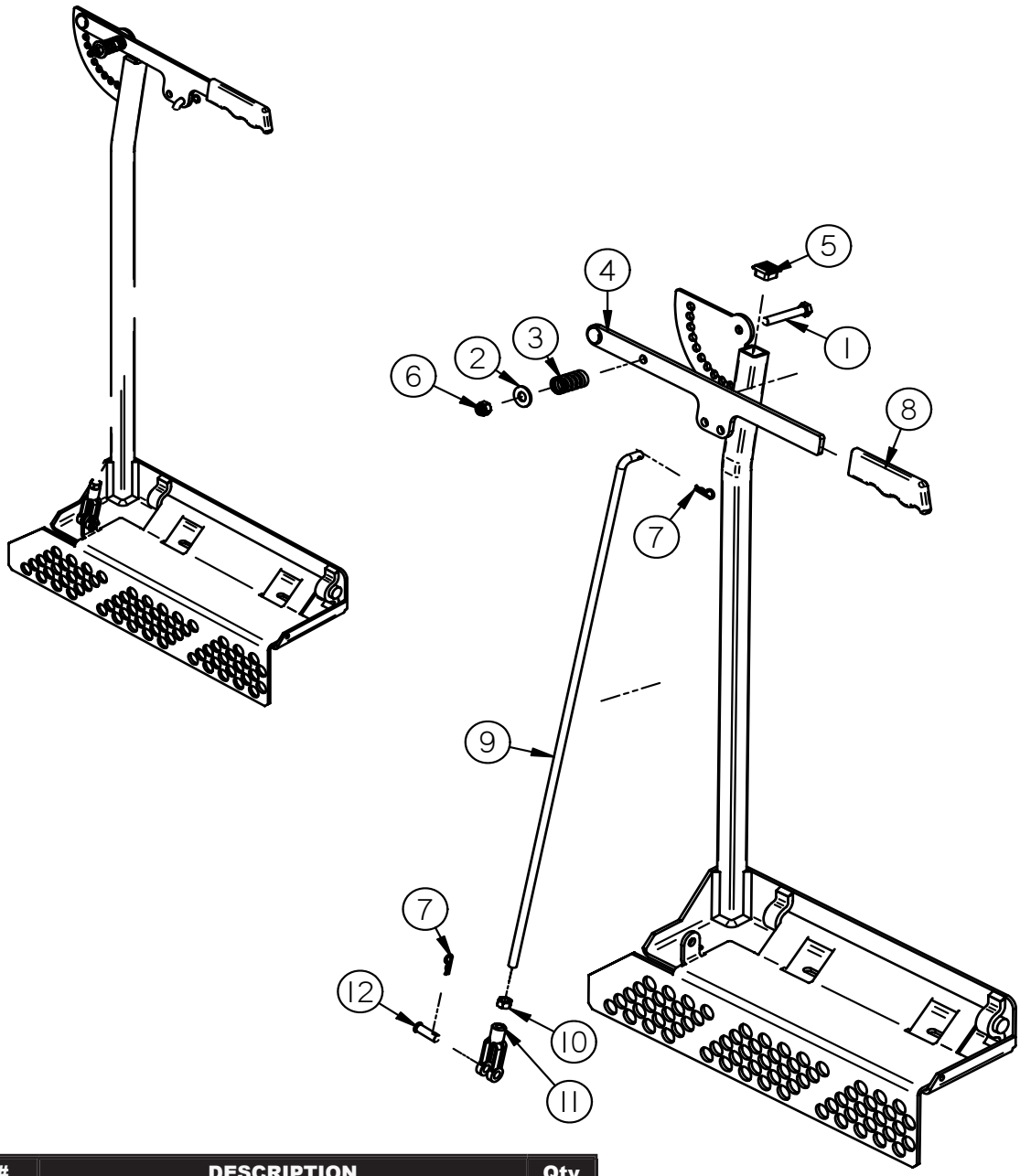

REF	PART#	DESCRIPTION	Qty
	300350	Assembly - 60” OCDC	
	B-135 N-108	3/8”-16x1” **(Carriage Bolt Hardware to Bolt to Deck)** 3/8”-16 Whiz Flange Nut **(Deck 3 Each)**	
1	B-179	3/8”-16 x2.5” Bolt	1
2	W-104	3/8” Standard Flat Washer	1
3	20252	Spring	1
4	900014	Handle	1
5	68142	1”x1” Plastic Plug	1
6	N-107	3/8”-16 Nyloc Nut	1
7	20224	Clip	2
8	67258	Handle Grip	1

REF	PART#	DESCRIPTION	Qty
9	68130	Control Rod (Inc. #9,10,11)	1
10	N-150	3/8”-24 Nut	1
11	N-155	3/8”-24 Yoke	1
12	P-102	3/8”x1.25” Clevis Pin	1
	68136	Lower Screen **(Optional Part Not Shown)**	1
	W-109	1/2” Standard Flat Washer	2
	B-138	1/2”-13x1” Bolt	2
	N-157	1/2”-13 Whiz Flange Nut	2

www.mymowerparts.com

For Dixie Chopper Discount Parts Call 606-678-9623 or 606-561-4983

DIXIE CHOPPER

TRANSMISSION FRAME ASSEMBLY

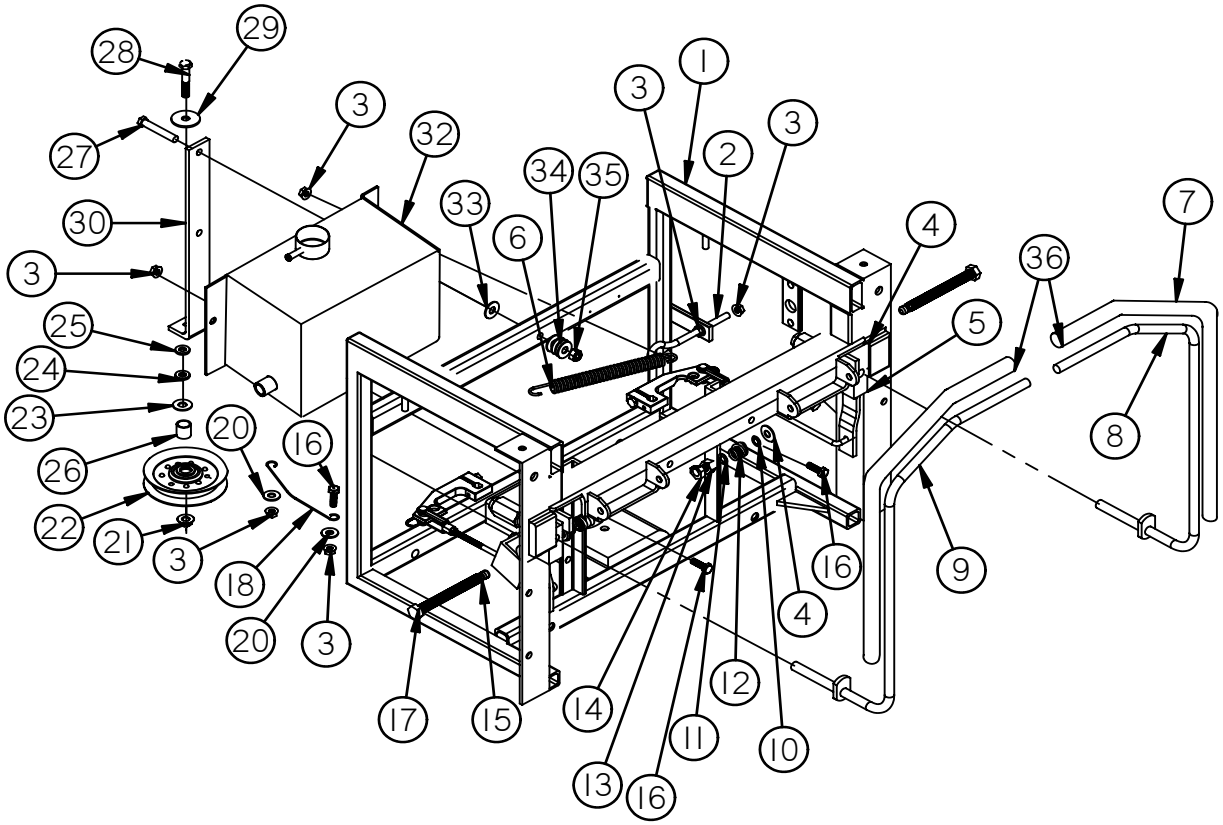

REF	PART#	DESCRIPTION	Qty
1	100007	Low Ride Transmission Frame	1
2	B-150	5/16” x 2 1/2” Eye Bolt	1
3	N-103-W	5/16”-18 Whiz Flange Nut	10
4	W-171	1/2”ID.x1 1/4”OD. Teflon Washer	4
5	65205	Steering Block Weldment	2
6	300324	Spring	2
7	400201	Foam Lever Sleeve	2
8	400069	Left Steering Lever	1
9	400068	Right Steering Lever	1
10	W-156	9/16” Standard Flat Washer	2
11	W-110	1/2” Machine Washer	2
12	20252	Spring	2
13	N-110	1/2”-13 Hex Nut	2
14	N-111	1/2”-13 Hex Jam Nut	2
15	F-101	1/4”-28 Grease Fitting 90 degree	2
16	B-131	5/16”-18x1” Gr. 5 Bolt	3
17	B-143-G	1/2”-13x4 1/2” Bolt w/G. Zerk	2
18	40218	Seat Strap	1
20	W-113	5/16” Standard Flat Washer	4

REF	PART#	DESCRIPTION	Qty
21	N-117	3/8”-16 Large Flange Lock Nut	1
22	30234	Pulley - V Idler	1
23	W-124	3/8” Machine Washer .120” **(As needed)**	
24	W-123	3/8” Machine Washer .060” **(As needed)**	
25	W-176	3/8” Machine Washer .031” **(As needed)**	
26	97415	Spacer	1
27	B-165	3/8”-16x2” Bolt	1
28	B-124	3/8”-16x1 3/4” Gr. 5 Bolt	1
29	W-104	3/8 Standard Flat Washer	1
30	100011	Idler Arm	1
32	200008	Hydraulic Tank	1
33	W-125	3/8” x 7/8” Plastic Washer	1
34	W-126	3/8” Dish Spring Washer	3
35	N-107	3/8”-16 Nylon Lock Nut	1
36	400228	Black Lever Steering Caps	2

www.mymowerparts.com

For Dixie Chopper Discount Parts Call 606-678-9623 or 606-561-4983

DIXIE CHOPPER

TRANSMISSION FRAME ASSEMBLY

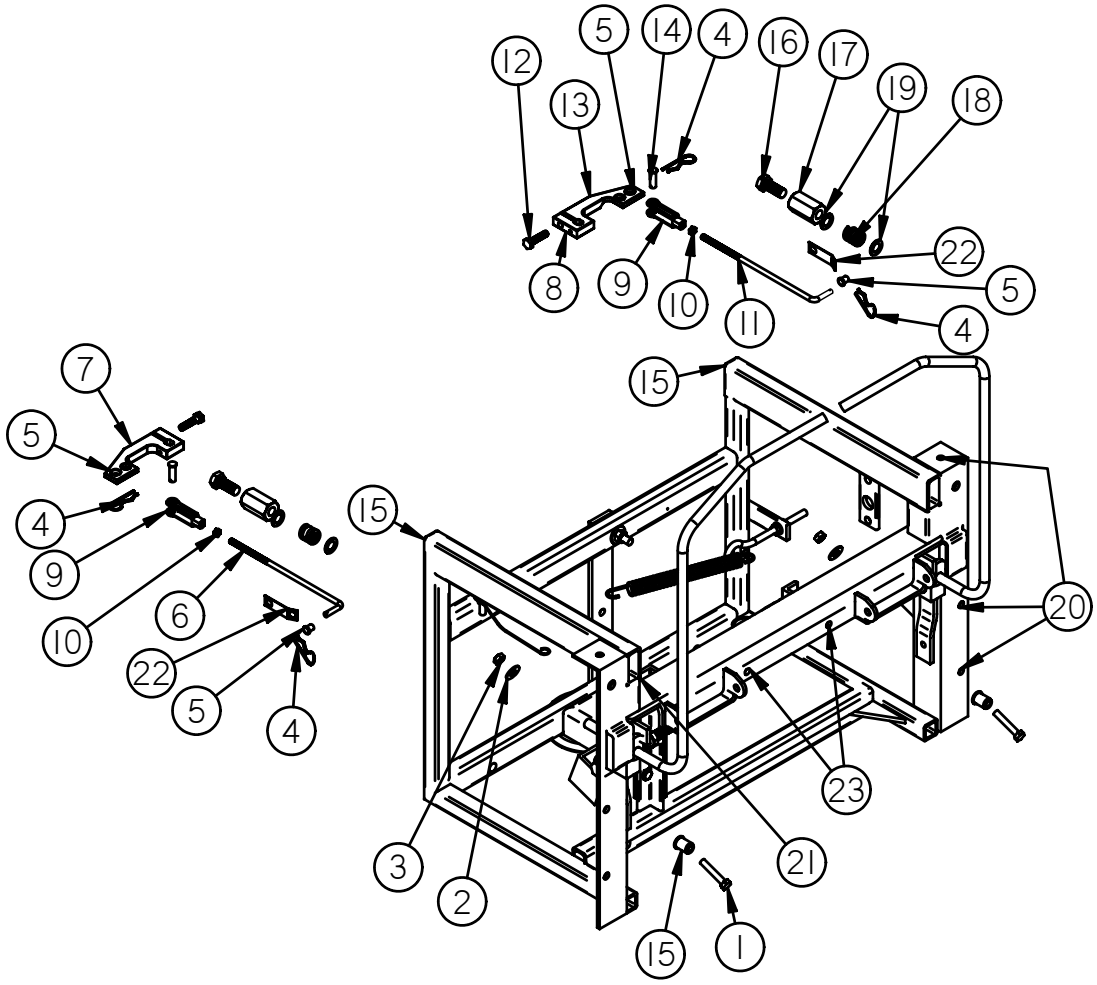

REF	PART#	DESCRIPTION	Qty
1	B-129	5/16”-18x2 1/4” Full Thread Bolt	2
2	W-113	5/16” Standard Flat Washer	2
3	N-103	5/16”-18 Standard Hex Nut	2
4	20224	Hairpin Clip	4
5	20222	Plastic Bushing	4
6	200001	Right Pump Control Rod (Incl. #6,9,10)	1
7	65207-R	Right Pump Control Arm	1
8	P-118	3/16” x 1 1/2” Roll Pin	2
9	20214	5/16”-24 Yoke	2
10	N-105	5/16”-24 Hex Nut	2
11	200002	Left Pump Control Rod (Incl. #9,10)	1
12	B-131	5/16”-18x1” Gr. 5 Bolt	2
13	65207-L	Left Pump Control Arm	1
14	P-101	5/16”x1” Clevis Pin	2
15	N-153	5/16”-18 Nut Insert	4

REF	PART#	DESCRIPTION	Qty
16	B-117	1/2”-13x1 1/4” Bolt	2
17	N-175	1/2”-13x1.850” Heavy Coupling Nut	2
18	20252	Spring	2
19	W-110	1/2” Machined Washer	4
20	N-152	1/4”-20 Nut Insert	6
21	67256	Plastic Plug 1”x 2”	2
22	20223	Backing Clip	2
23	N-188	1/4”-20 AR Series Threaded Insert	2

www.mymowerparts.com

For Dixie Chopper Discount Parts Call 606-678-9623 or 606-561-4983

DIXIE CHOPPER

TRANSMISSION & DRIVE

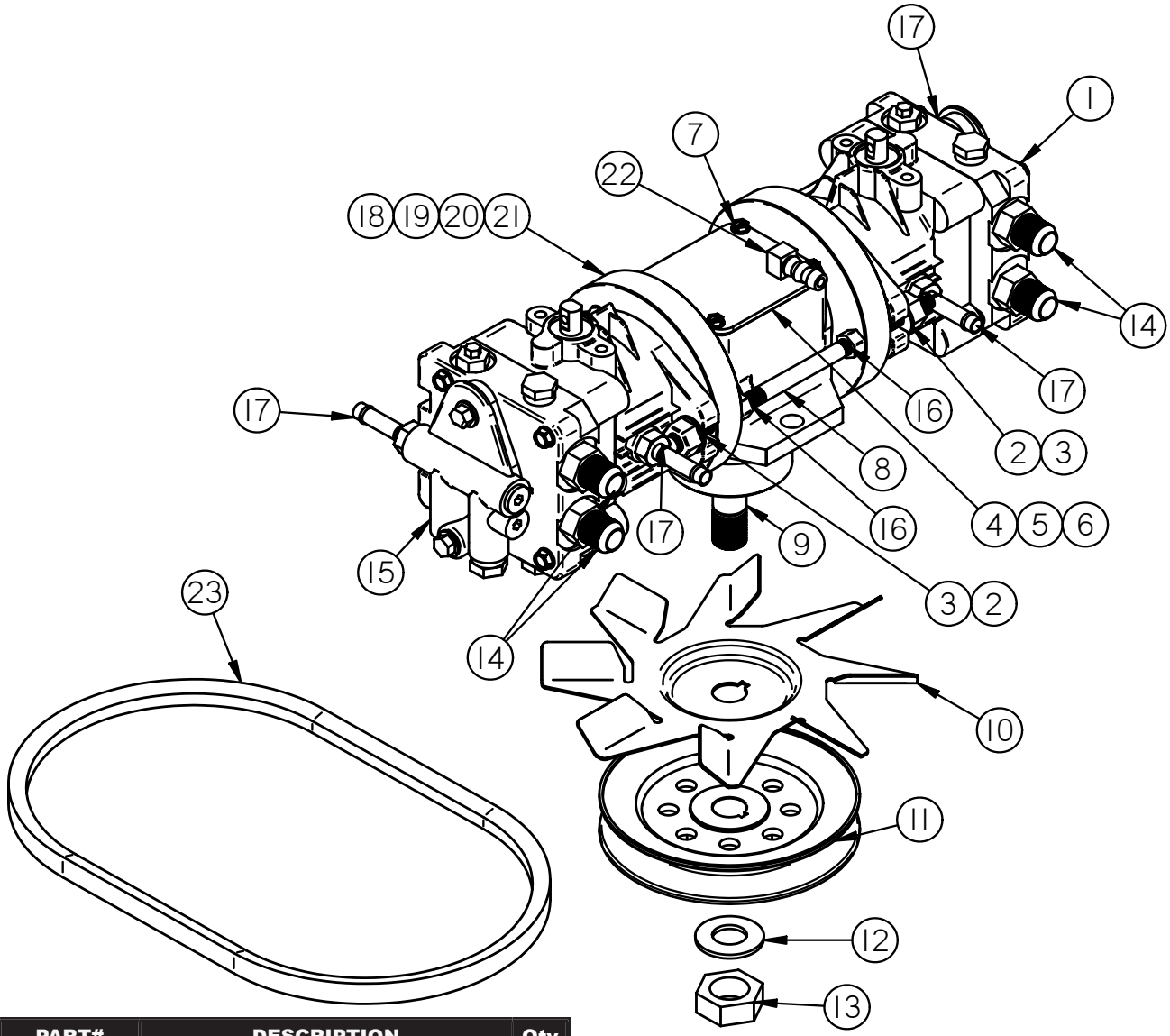

REF	PART#	DESCRIPTION	Qty
1	200080	13 Hydraulic Pump White - Right	1
2	N-168	Nut - 3/8”-24	4
3	W-169	Washer - 5/16” Grade 8 Flat	4
4	000365201-L	T Gear Box **(Complete Gear Box Only)**	1
5	788101	T Box Gasket	1
6	772150	T Box Cover Plate	1
7	792025	T Box Cover Plate Bolt	4
8	65206	3/8” Threaded Rod	2
9	K-102	Woodruff Key 3/16”x 3/4”	1
10	200040	Fan - Transmission **(Optional)**	
11	200041	Transmission Pulley 5 1/4” x 3/4” Bore	1
12	W-132	3/4” Belleville Washer	1
13	N-114	Nut - 3/4”-16	1
14	65004	High Pressure Port Fitting	4
15	200081	13 Hydraulic Pump White - Left	1

REF	PART#	DESCRIPTION	Qty
16	N-184	Nut - 3/8”-24	4
17	65072	Fitting - 3/8” ORB x 3/8” BEAD	4
18	65001	Small Bell Housing	2
19	788030B	Bearing Plate Gasket	2
20	792026	Bell Housing Bolt	8
21	65024	Pump O-Ring	2
22	68031	T Box Fitting (Brass)	1
23	2006B41R	Engine - Transmission Belt (B-41)	1

www.mymowerparts.com

For Dixie Chopper Discount Parts Call 606-678-9623 or 606-561-4983

DIXIE CHOPPER

14 Cu. In. WHEEL MOTOR

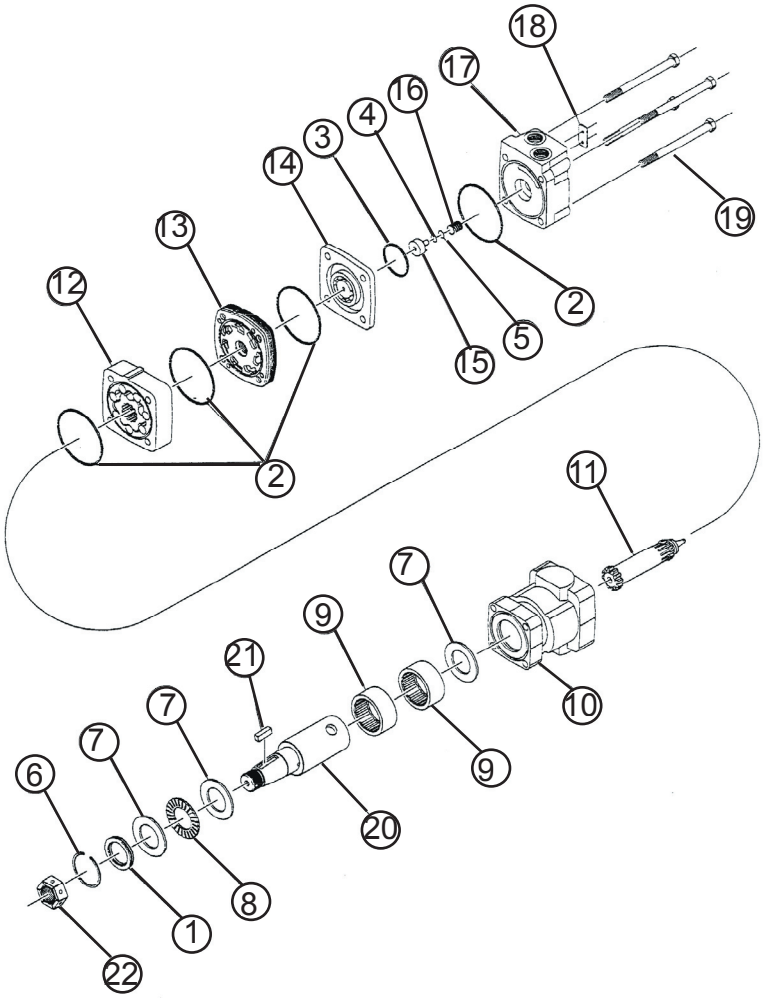

REF	PART#	DESCRIPTION	Qty
	67114	Complete 14 Cu. In. Wheel Motor Identification # W80379	2
	PB333700	Seal Kit (Contains item 1-5)	
1	PB018069	Dust/Shaft Seal	1
2	IN KIT	Body Seal	4
3	IN KIT	Commutator Seal	1
4	IN KIT	O-ring Seal	1
5	IN KIT	Teflon Back-up Seal	1
6	PB018073	Snap Ring	1
7	PB018054	Thrust Washer	3
8	PB018052	Thrust Bearing	1
9	PB018052	Housing Bearing	2

REF	PART#	DESCRIPTION	Qty
10	PB130015	Housing	1
11	PB014027	Drive Link (14 cu.in.)	1
12	PB332014	Rotor Assembly (14 cu.in.)	1
13	PB015008	Manifold	1
14	PB012013	Commutator Assembly	1
15	PB018056	Endcover Piston	1
16	PB018059	Piston Spring	1
17	PB160007G	Endcover	1
18	N/A	ID Tag	1
19	PB334014	Assembly Bolts (14 cu.in.)	4
20	PW72545	Shaft	1
21	PW72546	Shaft Key	1
22	PB339303P	Shaft Nut	1

www.mymowerparts.com

For Dixie Chopper Discount Parts Call 606-678-9623 or 606-561-4983

DIXIE CHOPPER

HYDRAULIC HOSE DIAGRAM

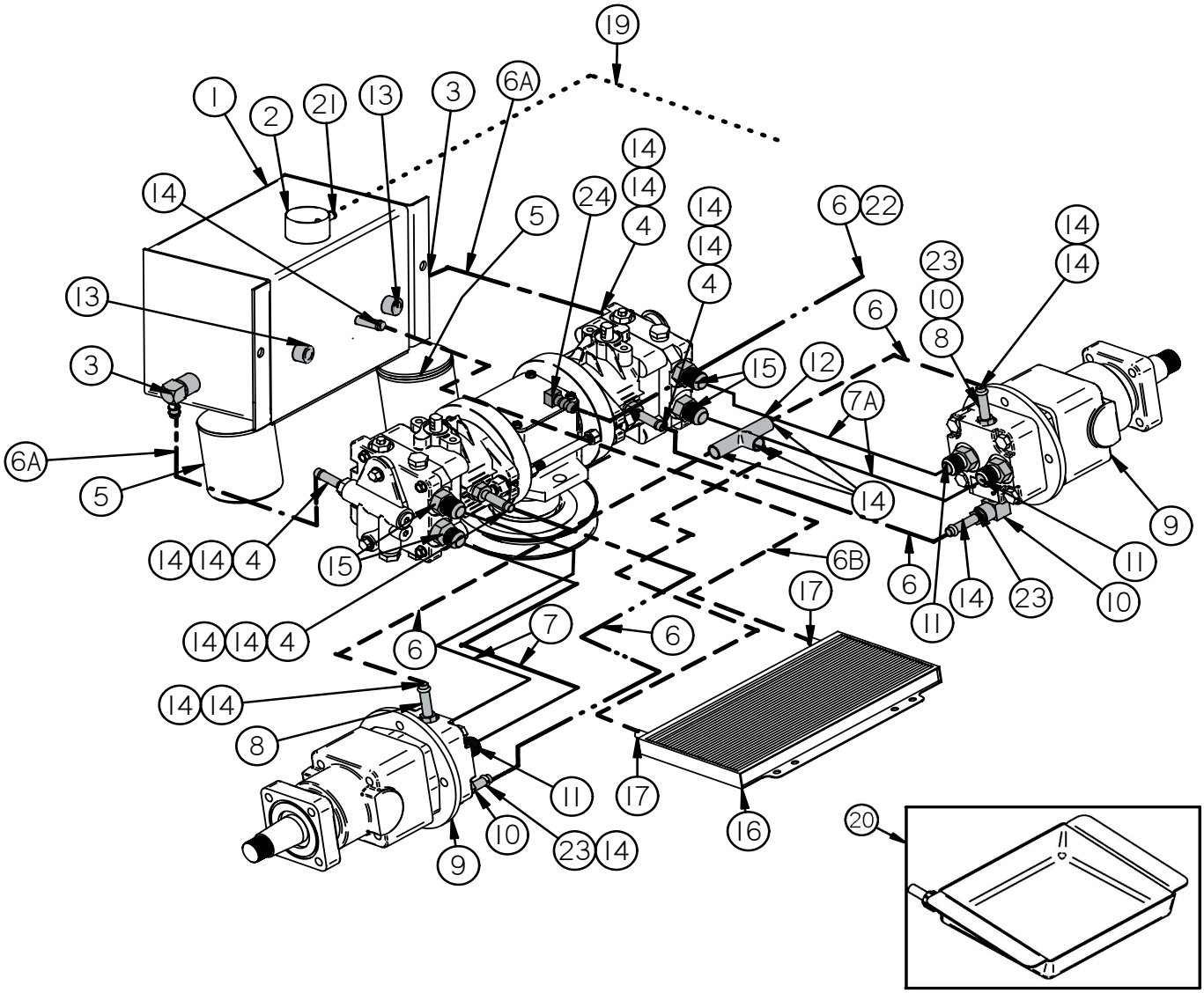

REF	PART#	DESCRIPTION	Qty
1	200008	Hydraulic Tank w/Cap	1
2	40117-C	Oil Cap	
3	60125	90 - 3/8” NPT x 3/8” Barb	2
4	65072	Charge Pump Inlet Fitting	4
5	68140	Filter - Hydro Zinga 40 Micron	2
6 6A 6B	65108 200027 60109	3/8” Clear Hose 3/8” Black Ribbed Hose **(Exterior Braided)** 3/8” Black Hose	/ft. /ft. Inch.
7	65073	High Pressure Black Hydro Hose	2
7A	65074	High Pressure Black Hydro Hose	2
8	67016	1/4” O-ring x 3/8” Barb Straight	1
9	67114	Wheel Motor - 14 Cu.In.	2
10	67017	90 - Degree Fitting	3
11	87104	Steel Fitting	4

REF	PART#	DESCRIPTION	Qty
12	67008	3/8” Tee	1
13	65009	3/8” Pipe Plug	1
14	67013	3/8” Clamps	18
15	65004	High Pressure Port Fitting	4
16	60103-L	Oil Cooler	1
17	68231	#4 Micro Hose Clamp	2
19	97374	5/16” Black Hose	/ft.
20	900018	**Optional** - Drain Pan for Hydro Filter	
21	72012	5/16” Clamp	1
22	28534	T-Box Plug	1
23	67014	Brass Fitting	3
24	68031	1/8” x 3/8” 90 Deg. Brass Fitting	1

www.mymowerparts.com

For Dixie Chopper Discount Parts Call 606-678-9623 or 606-561-4983

DIXIE CHOPPER

Fuel System

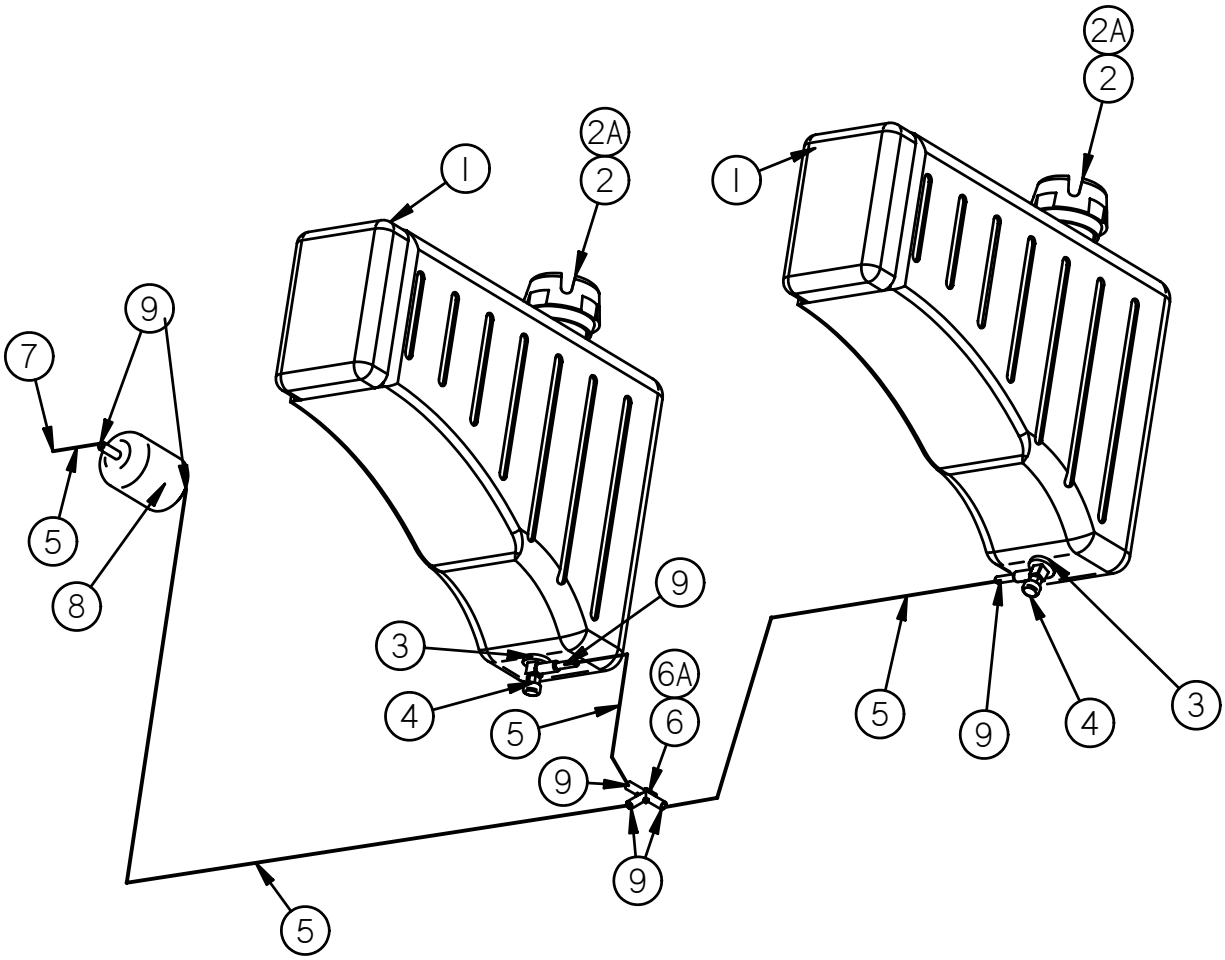

REF	PART#	DESCRIPTION	Qty
1	40204-1	3 Gal. Fuel Tank	2
2 2A	600035 40117-1	Fuel Cap Fuel Cap - Manual Vent w/Guage **(Optional)**	2
3	40220	Fuel Tank Bushing	2
4	400016	Valve - Fuel Tank Shut-Off	2

REF	PART#	DESCRIPTION	Qty
5	97374	Gas Line - 5/16”	/ft.
6 6A	97369 65008	Gas Line “Y” - 5/16” Gas Line “T” - 5/16”	1
7	68231	Hose Clamp	1
8	97392	Filter - Gas & Water Parker	1
9	72012	Spring Clamp (Black)	7

www.mymowerparts.com

For Dixie Chopper Discount Parts Call 606-678-9623 or 606-561-4983

DIXIE CHOPPER

Throttle Assembly

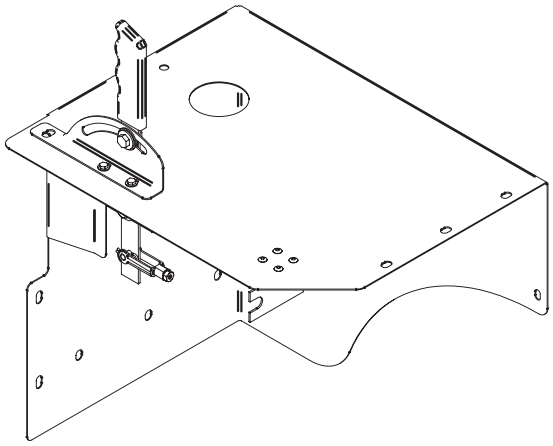

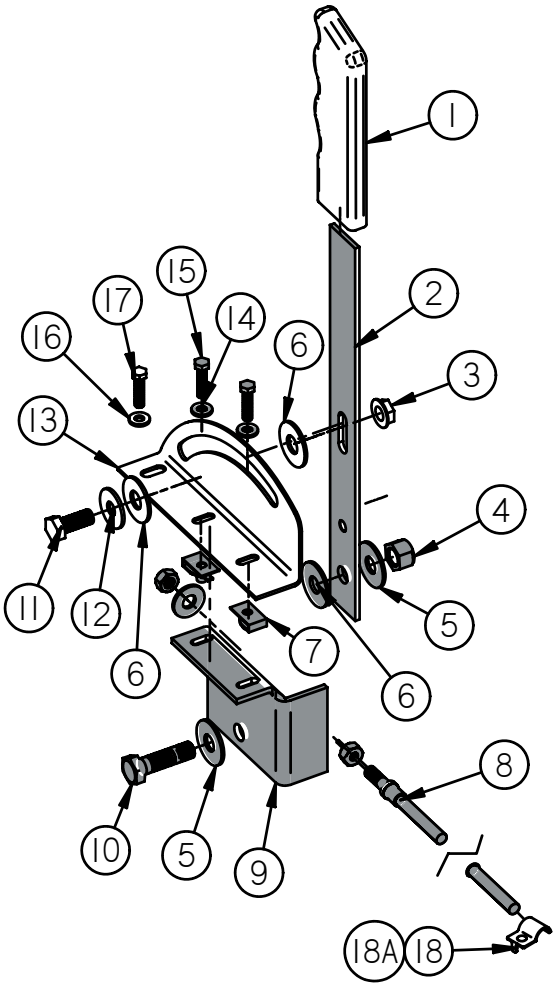

REF	PART#	DESCRIPTION	Qty
	68250	Complete Throttle Assembly 2,5 - 11,15,16	
1	67258	Handle Grip (Black)	1
2	97012	Offset Throttle Handle	1
3	N-134	5/16” Flange Lock Nut	1
4	N-107	3/8” -16 Nyloc Nut	1
5	W-104	3/8” Standard Flat Washer	2
6	W-125	3/8” Nylon Washer	3
7	C-105	Clip Nut	2
8	68249	Throttle Cable Washer Hex Nut	1 2 2

REF	PART	DESCRIPTION	Qty
9	97011	Lower Throttle Mounting Bracket	1
10	B-108	3/8”-16 x1” Bolt	1
11	B-107	5/16”-18 x 3/4” Bolt	1
12	W-113	5/16” Flat Washer	1
13	65270CAM	Upper Stainless Throttle Bracket	1
14	W-152	#10 Stainless Washer	2
15	B-203	10-24x3/4” Stainless Bolt	2
16	W-153	1/4” Stainless Flat Washer	1
17	B-209	1/4”-20x3/4” Bolt	1
18	C-107	Clamp - Kohler Clamp - Guardian	1 2

www.mymowerparts.com

For Dixie Chopper Discount Parts Call 606-678-9623 or 606-561-4983

DIXIE CHOPPER

BODY

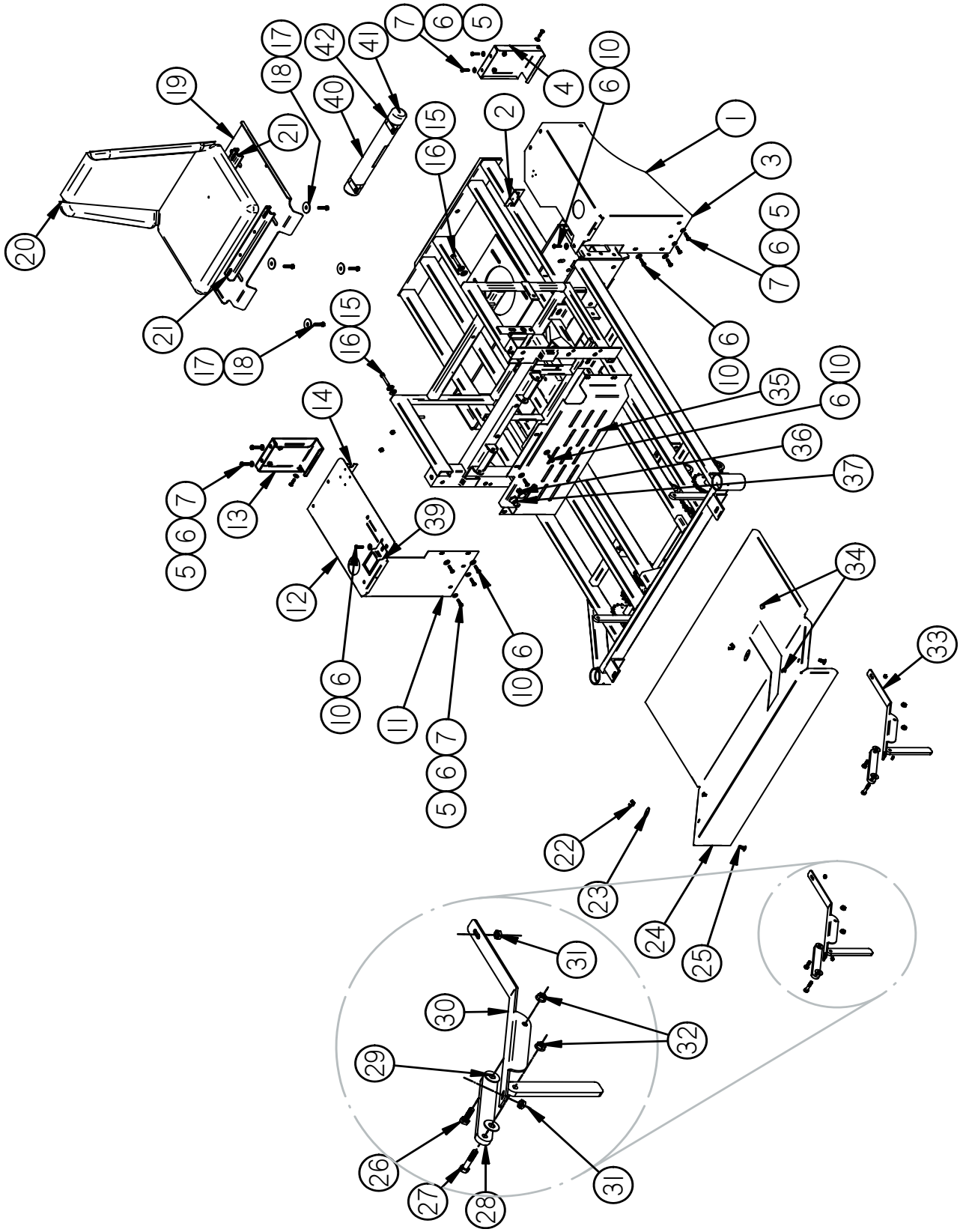

www.mymowerparts.com

For Dixie Chopper Discount Parts Call 606-678-9623 or 606-561-4983

DIXIE CHOPPER

BODY

REF	PART#	DESCRIPTION	Qty
1	400001CAM	Fender - 3 Gal. Low Ride Left	1
2	400035CAM	Left Fender Mounting Tab	1
3	400029CAM	Left Front 3 Gal. Fuel Tank Support Bracket	1
4	400031CAM	Left Rear 3 Gal. Fuel Tank Support Bracket	1
5	B-103	1/4”-20x1/2” Stainless Bolt	10
6	W-153	1/4” Stainless Flat Washer	18
7	N-101	1/4”-20 Stainless Whiz Flange Nut	10
10	B-209	1/4”-20x3/4” Stainless Bolt	8
11	400030CAM	Right Front 3 Gal. Fuel Support Tank Bracket	1
12	400002CAM	Fender - 3 Gal. Low Ride Right	1
13	400032CAM	Right Rear 3 Gal. Fuel Support Bracket	1
14	400036CAM	Right Fender Mounting Tab	1
15	B-105	5/16”-18x1 3/4” Bolt	2
16	W-113	5/16” Standard Flat Washer	6
17	B-131	5/16”-18x1” Grade 5 Bolt	4
18	W-118	5/16” Fender Flat Washer	4
19	400171	Pan - Standard Suspension Seat	1
20	400200 CAM 176200	Seat - Gray Armrest Kit F/Gray Seat	1
21	400028	Seat Spacer	2
22	N-106	5/16”-18 Wing Nut	2
23	W-106	3/8” Fender Washer	2

REF	PART#	DESCRIPTION	Qty
24	67268CAM	Floor Pan	1
25	B-104	5/16”-18x3/4” Carriage Bolt	2
26	B-131	5/16”-18x1” Grade 5 Bolt	2
27	B-174	5/16”-18x1 1/4” Bolt	2
28	400007CAM	Connecting Arm	2
29	W-125	3/8” x 7/8” Plastic Washer	4
30	400006CAM	Floor Pan Mounting Bracket (Right)	1
31	N-176	1/4”-20 Nylon Lock Nut	4
32	N-131	5/16”-18 Nylon Lock Nut	4
33	400005CAM	Floor Pan Mounting Bracket (Left)	1
34	B-157	1/4”-20x1/2” Carriage Bolt	4
35	400077CAM	Stainless Steel Front Panel	1
36	20248	Choke	1
37	20245	Ignition Switch	1
39	400167CAM	Hourmeter Bracket	1
40	900016	Docu-Tube (Clear Tube)	1
41	900017	Cap - Soft Vinyl (Red)	2
42	C-109	Tie Strap & Clip **(F/Tube)**	2
	400063	3 Gal. Cooler Bracket **(Optional)** **Incl. 1 Decal Part # 800048**	
	400060	Igloo Cooler **(Optional)** **Incl. 1 Decal Part # 800050**	

www.mymowerparts.com

For Dixie Chopper Discount Parts Call 606-678-9623 or 606-561-4983

DIXIE CHOPPER

BRAKE ASSEMBLY

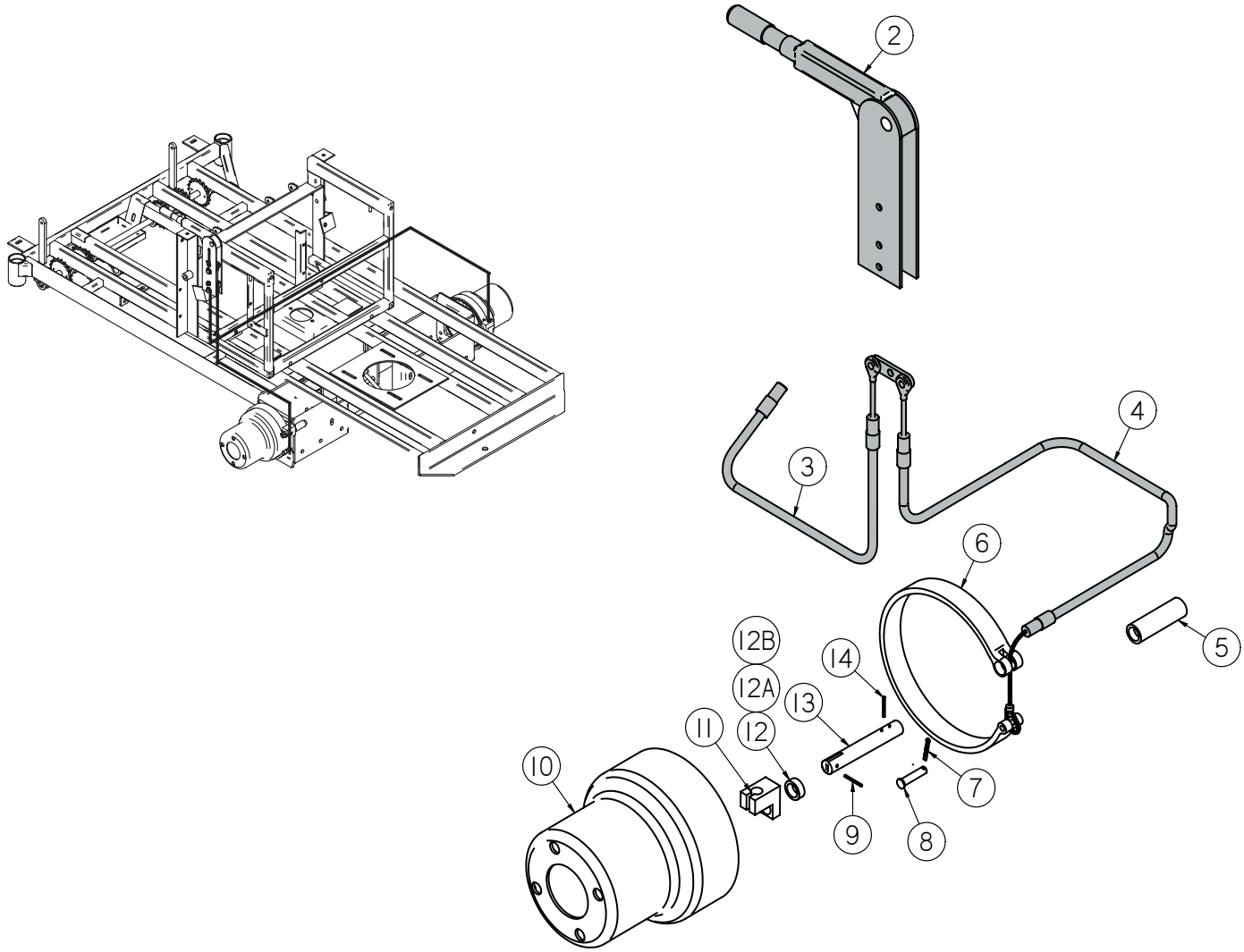

REF	PART#	DESCRIPTION	Qty
	N/A	Complete Brake Assembly	
2	400229	Brake Handle Assembly **(Incl. 3, 4)**	1
3	400231	Right Brake Cable (Long)	1
4	400230	Left Brake Cable (Short)	1
5	65277	Bushing (Welded on Frame)	2
6	65244	Brake Band	2
7	P-108	Hairpin Cotter	2
8	P-102	3/8” x 1 1/4” Clevis Pin	2
9	P-100	3/16” x 1” Roll Pin	2
10	67266	Brake Drum	2
11	991100025	Brake Cable Retainer	2
12 12A 12B	65278 65284 30112	Spacer - Use #65278 and 30112 or #65284 to place brake band fully onto brake drum	
13	65243	Brake Pin	
14	P-118	3/16” x 1 1/2” Roll Pin	2

www.mymowerparts.com

For Dixie Chopper Discount Parts Call 606-678-9623 or 606-561-4983

DIXIE CHOPPER

ENGINE - 27Hp GUARDIAN

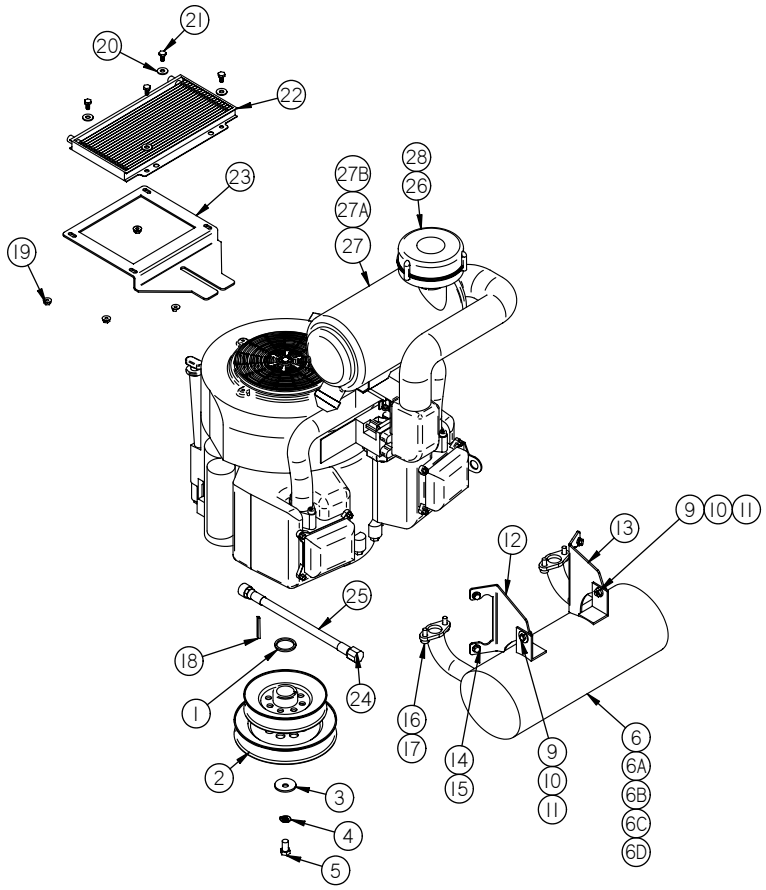

REF	PART#	DESCRIPTION	Qty
	600090	27Hp Guardian Engine **(Spec #05058-1)**	
1	W-145	1 1/8" ID. x 1 3/4" OD.	1
2	9907500X600D	Pulley - 5x6x1 1/8" Engine	1
3	W-144	7/16" Stainless Belleville Washer	1
4	W-108	7/16" Lock Washer	1
5	B-114	7/16"-20x3/4" Hex Head Bolt	1
6 6A 6B 6C	600061 600032 600059 600060	Kit - Muffler Guardian Muffler Tailpipe - Optional Clamp - Optional	1
6D	0C4138	Gasket - Guardian Muffler	2
9	B-107	5/16"-18x3/4" Bolt	2
10	W-113	5/16" Flat Washer	2
11	N-103-W	5/16"-18 Whiz Flange Nut	2
12	600057	Bracket - LH Muffler	1
13	600058	Bracket - RH Muffler	1
14	W-179	M6 Lock Washer	4
15	B-269	M6-16x1.00 Bolt	4

REF	PART#	DESCRIPTION	Qty
16	045761A	Stud - M8-1.25x10MM	4
17	052858	Nut - Lock Flange M8-1.25	4
18	K-100	1/4" Key	1
19	N-102	1/4"-20 Whiz Flange Nut	4
20	W-102	1/4" Flat Washer	4
21	B-101	1/4"-20x1/2" Bolt	4
22	60103-L	Oil Cooler	1
23	400105CAM	Bracket - Oil Cooler Guardian	1
24	600103	3/8" Steel Pipe Cap	1
25	600102	Oil Drain Hose Assembly	1
26	90115	Turbo Pre-cleaner	1
27 27A 27B	0E3655 0E3557 0E3656	Canister - Donaldon Air Cleaner Primary Element Donaldson Air Cleaner Secondary Element Donaldson Air Cleaner	
28	90125	Clamp	

www.mymowerparts.com

For Dixie Chopper Discount Parts Call 606-678-9623 or 606-561-4983

DIXIE CHOPPER

GUARDIAN 27Hp
ELECTRICAL DIAGRAM

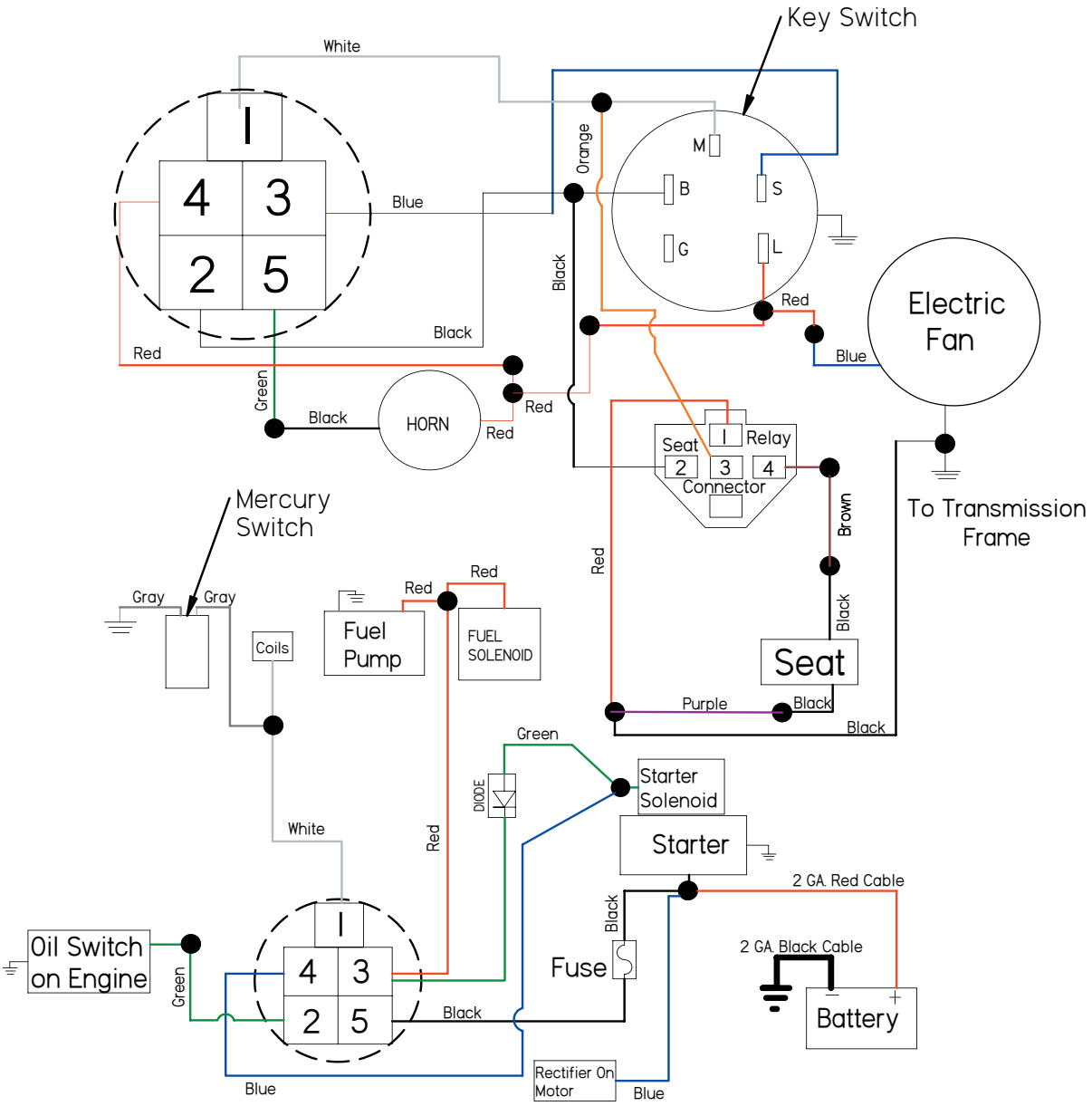

PART#	DESCRIPTION	Qty
500004	Guardian Wiring Harness	1
20245	Ignition Switch	1
500037	Hour Meter/Tech	1
400167CAM	Tach Bracket	1
N/A	Battery	1
400065CAM	Standard Battery Tray	1
20228	Battery Strap	1
20227-72	Battery Cable Positive 72”	1
20226-B	Battery Cable Ground 12”	1

PART#	DESCRIPTION	Qty
20225-B	Battery Boot	1
40229	Mercury Switch	1
C-112	Clamp For Mercury Switch	1
65510	Seat Relay	1
500035	Seat Relay Pigtail	1
65509	Fuse	
20254	Fuse Holder	
60117 C-113	Low Oil Horn Clamp	1 1
900073	Loom - Wrap Spiral	1

www.mymowerparts.com

For Dixie Chopper Discount Parts Call 606-678-9623 or 606-561-4983

DIXIE CHOPPER®

NOTES

www.mymowerparts.com

For Dixie Chopper Discount Parts Call 606-678-9623 or 606-561-4983

DIXIE CHOPPER®

NOTES

www.mymowerparts.com

For Dixie Chopper Discount Parts Call 606-678-9623 or 606-561-4983

DIXIE CHOPPER

The World's Fastest Lawn Mower

6302 E. County Road 100 North
Coatesville, IN. 46121
Phone 1-765-CHOPPER
www.dixiechopper.com

Dixie Chopper, Magic Circle, and the Magic Circle Atom Logo are all trademarks of Magic Circle Corporation and may not be reproduced without permission.

Printed In USA
Specifications and instructions subject to change without notice.
Print Date 08/07

www.mymowerparts.com