For Dixie Chopper Discount Parts Call 606-678-9623 or 606-561-4983

DIXIE CHOPPER

The World's Fastest Lawn Mower

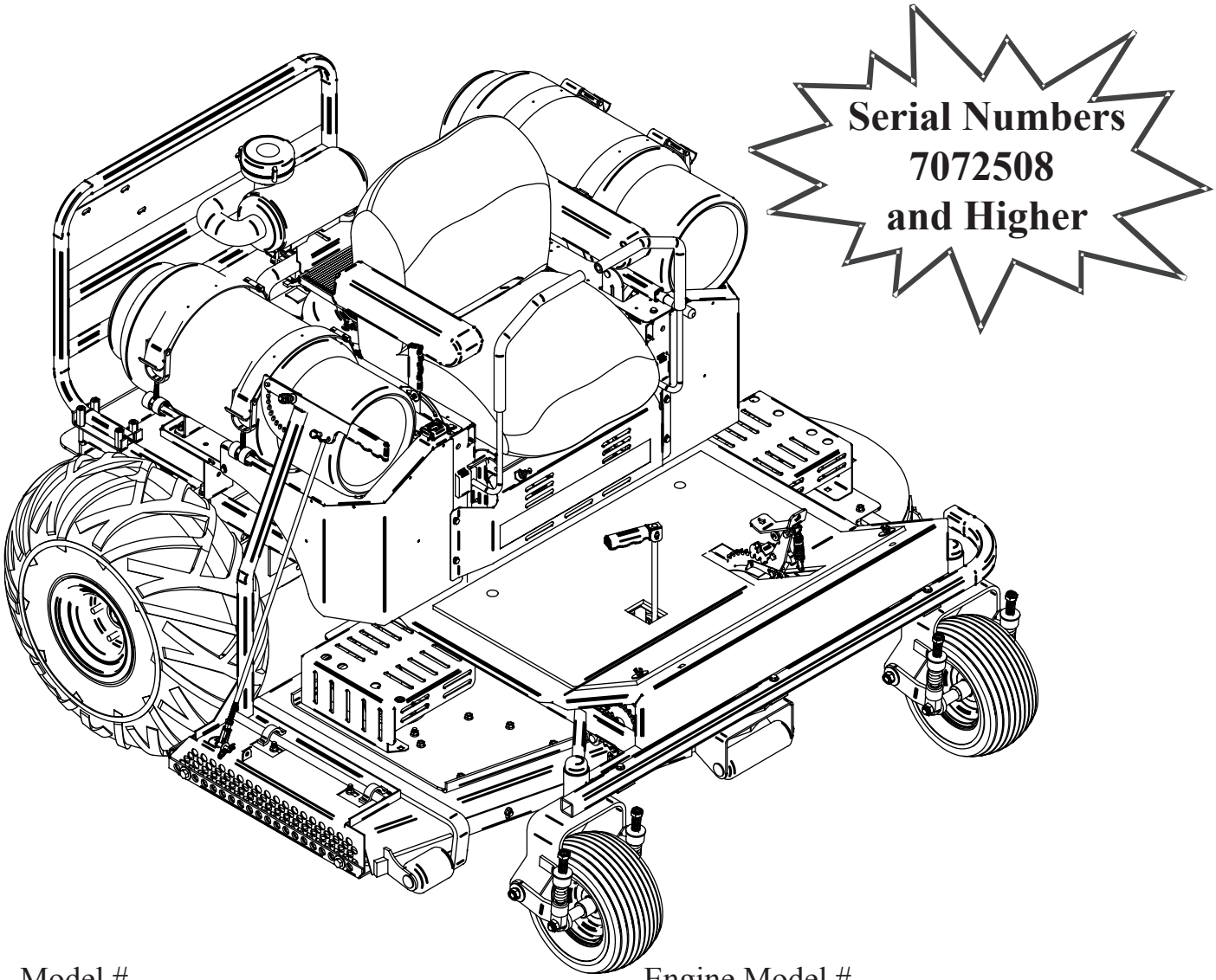

Model # _____ Engine Model # _____

Serial # _____ Engine Serial # _____

Date Purchased _____ Engine Spec. # _____

2007 ALTERNATIVE POWER PARTS MANUAL

700106

October, 2006

www.mymowerparts.com

For Dixie Chopper Discount Parts Call 606-678-9623 or 606-561-4983

DIXIE CHOPPER®

Congratulations on your purchase of a **DIXIE CHOPPER** lawn mower. We believe you have exercised excellent judgement, and are most appreciative of your patronage.

Your DIXIE CHOPPER Dealer is your *#1 SOURCE*
for
DIXIE CHOPPER parts and service !

Please call or visit your nearest authorized Dixie Chopper Dealer for
additional service information.

AUTHORIZED DEALER

Let us know how you are getting along with your new CHOPPER!
www.dixiechopper.com

Dixie Chopper reserves the right to make changes or add improvements to its products at any time without incurring any obligation to make such changes to products previously manufactured. Neither Dixie Chopper, nor its dealers, accept responsiblility for variations which may be evident in the actual specifications of its products and the statements and descriptions contained in this publication.

www.mymowerparts.com

For Dixie Chopper Discount Parts Call 606-678-9623 or 606-561-4983

DIXIE CHOPPER®

CONTENTS

QUICK REFERENCE PARTS	1
DECALS	2
DECAL PLACEMENT	4
FRAME	5
WHEELS AND TIRES	7
FOOT PEDAL	8
DECK LIFT SYSTEM	9
DECK	11
OCDC	15
HUBS & BELTS	17
TRANSMISSION FRAME	18
TRANSMISSION & DRIVE	20
WHEEL MOTOR	21
HYDRAULIC HOSE DIAGRAM	22
FUEL	24
BODY	25
THROTTLE	27
BRAKE ASSEMBLY	28
ENGINE - GENERAC	29
GENERAC ENGINE OIL ROUTING	30
ELECTRICAL DIAGRAM - GENERAC	31
GENERAL SAFETY	32

www.mymowerparts.com

For Dixie Chopper Discount Parts Call 606-678-9623 or 606-561-4983

DIXIE CHOPPER®

LP MOWERS
QUICK REFERENCE PARTS

MODEL	LP3000-72	LP3000-60
Engine	Generac 30Hp	Generac 30Hp
Deck	72”	60”
Rear Tires	97200	97200
Rear Rims	400014	400014
Rear Tire & Rim (Right/Left)	400020/400019	400020/400019
Front Tire/Rim (15 X 6.00 X6)	400053	400053
Belts		
Engine-Transmission	2006B42R	2006B42R
Engine-Deck	2006B88W	2006B88W
Deck	2006B160R	9907B130R
Filters		
Fuel Filter	0F0106	0F0106
Nelson Air Filter Primary		
Nelson Air Filter Secondary		
Donaldson Air Filter (Primary)	0E3557	0E3557
Donaldson Air Filter (Secondary)	0E3656	0E3656
Amsoil Oil Filter	60119	60119
Zinga-Hydro Filter (2)	68140	68140
Blades		
X Style (Standard)	30227-72X	30227-60X
Standard	30227-72H	30227-60H
Heavy-Duty	30227-72N	30227-60N
Various Parts SOME MODELS		
Fiber Washer	W-101	
Spindle Bearing	30218	
Deck Roller (Ctr)	30240-O	
Throttle Cable	68249	
Brake Cable	65246 (Left)	65247 (Right)
Throttle Cable	68250	
Fuel Cap	600035	
Control Lever Grip	20257	

www.mymowerparts.com

For Dixie Chopper Discount Parts Call 606-678-9623 or 606-561-4983

DIXIE CHOPPER

DECALS

1

2

3

4

5

6

7

8

9

10

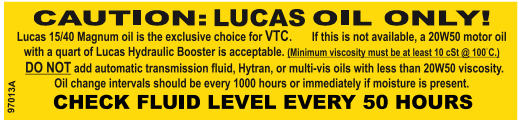

11

12

12A

REF	PART#	DESCRIPTION	Qty
1	800143	LP3000 Decal	1
2	65413	Patent Pending Decal	1
3	800014	Ignition Decal	1
4	97514	Warning Run Hot Decal	1
5	800060	Lucas Grease, Spindle Decal	1
6	800048	Top Right Fender Decal	1

REF	PART#	DESCRIPTION	Qty
7	800047	Top Left Fender Decal	1
8	264000200210	VTC Reflective Decal	1
9	30590	U.S.A. Decal	1
10	30229	Deck Danger Decal	2
11	97013A	Motor Oil Only Decal	1
12	65409	60" Cut Decal	2
12A	65437	72" Cut Decal	2

www.mymowerparts.com

For Dixie Chopper Discount Parts Call 606-678-9623 or 606-561-4983

DIXIE CHOPPER

DECALS (CONT'D)

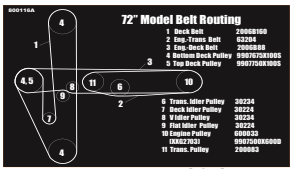

13

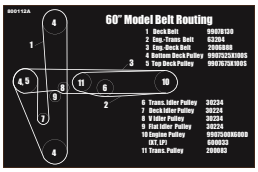

13A

14

15

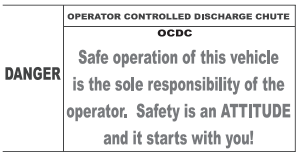

16

17

18

19

20

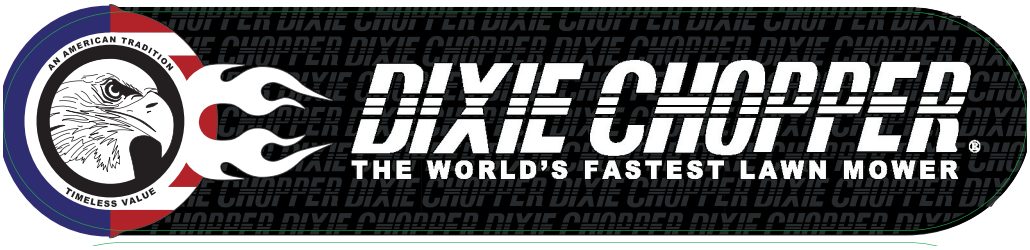

21

22

23

24

25

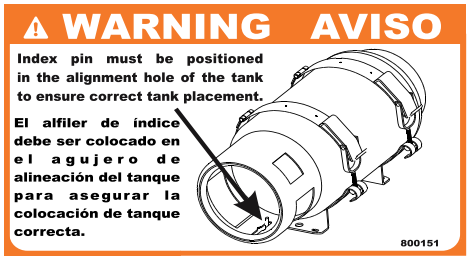

26

REF	PART#	DESCRIPTION	Qty
13 13A	800116A 800112A	72" Belt Route Decal 60" Belt Route Decal	1 1
14	800018	Docu-Tube Caution Decal	1
15	800008	HP+1 Decal	1
16	97072	OCDC Chute Decal	1
17	800020	American Flag Decal	1
18	97014	Idler Position Decal	1

REF	PART#	DESCRIPTION	Qty
19	800059	Dixie Power Generac Decal	1
20	800061	Lucas Engine Oil Decal	1
21	800155	Floor Pan/Crash Guard Decal	2
22	800056	Danger Pulley Fan Decal	3
23	97008	STOP! Crossmember Decal	1
24	800088	Dixie Chopper Decal	2
25	800126	LP Shut-Off Decal	2
26	800151	Decal - Warning Alignment LP	2

www.mymowerparts.com

For Dixie Chopper Discount Parts Call 606-678-9623 or 606-561-4983

DIXIE CHOPPER

DECAL PLACEMENT

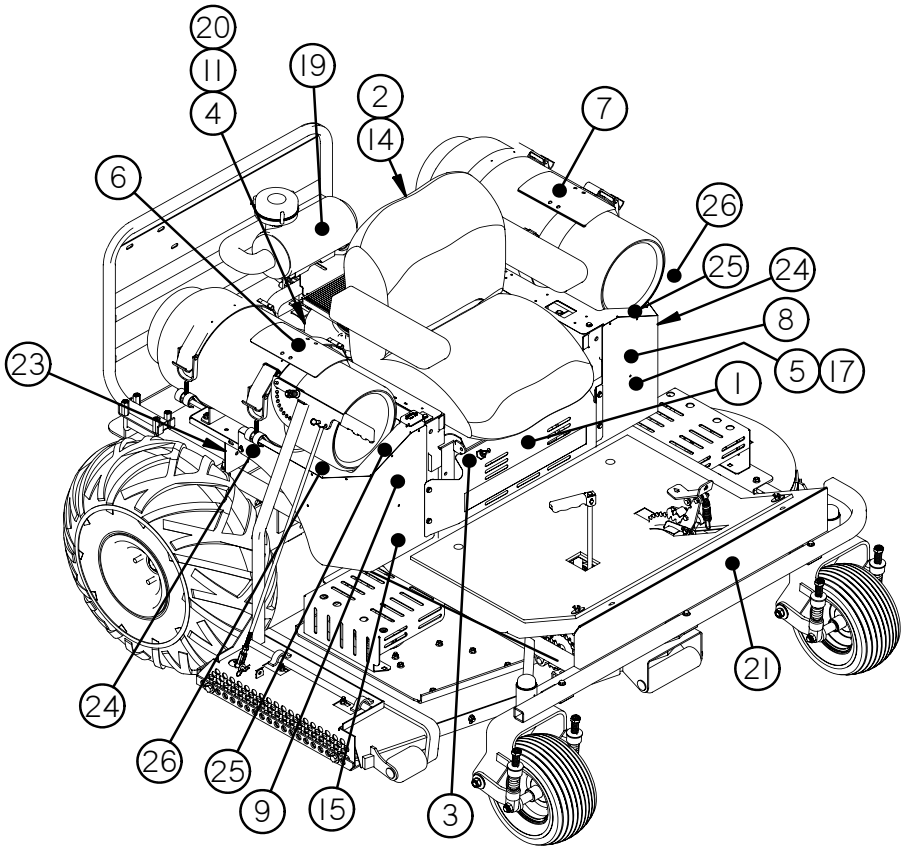

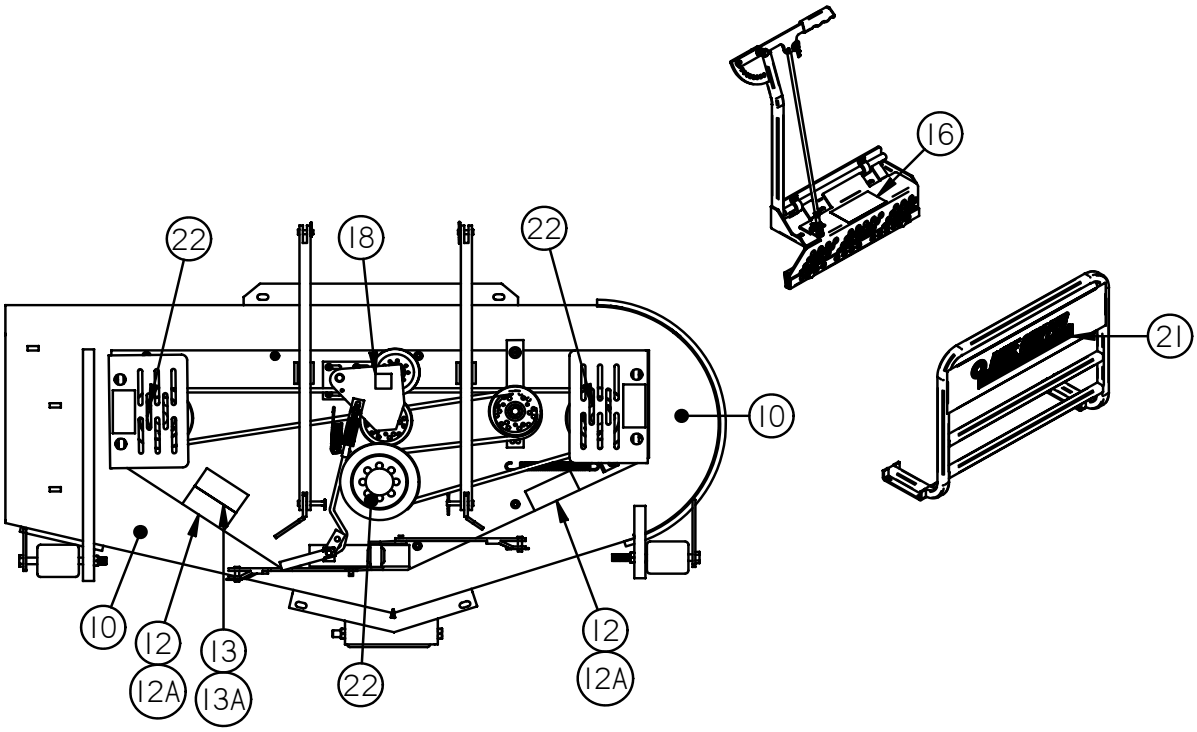

www.mymowerparts.com

For Dixie Chopper Discount Parts Call 606-678-9623 or 606-561-4983

DIXIE CHOPPER

LP3000-60” FRAME

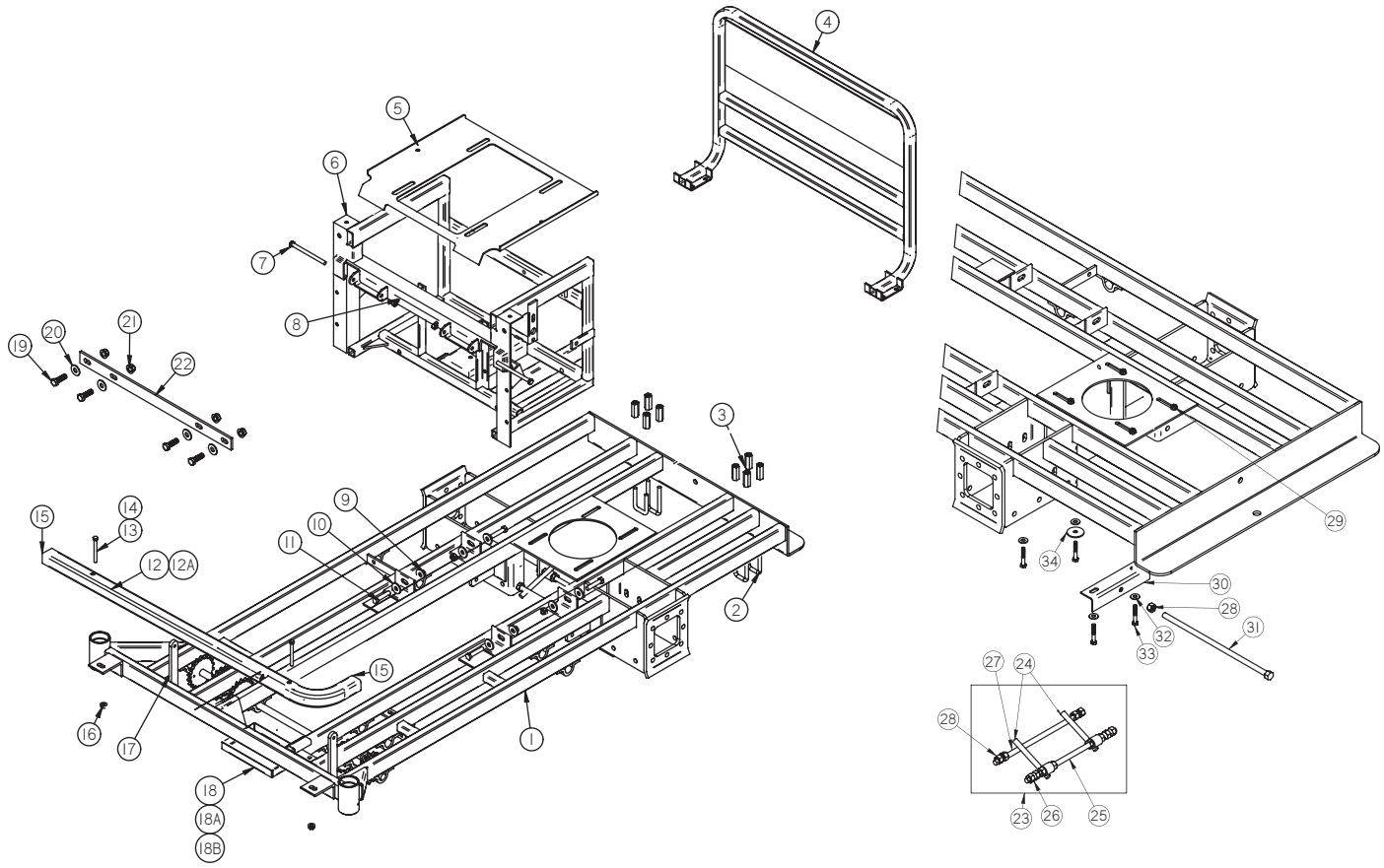

REF	PART#	DESCRIPTION	Qty
1	100069	Frame - LP 60”	1
2	B-204	3/8”-16 U-Bolts	4
3	N-160	3/8”-16 Coupling Nut	8
4	400111	Crash Guard	1
5	400171	Pan - Seat Standard Seat Suspension	1
6	100007	Weldment - Low Ride Transmission Frame	1
7	B-229	3/8”-16x5” Bolt	2
8	N-107	3/8”-16 Nyloc Nut	2
9	N-135	7/16”-20 Nyloc Nut	4
10	W-168	7/16” Standard Flat Washer Gr. 8	8
11	B-199	7/16”-20x2” Bolt	4
12 12A	10100-ST 67045-60S	Bumper Solid Bumper **(Optional)**	1
13	W-160	10mm Flat Washer	2
14	B-179	3/8”-16x2 1/2” Bolt	2
15	97169	Plastic Plug	2
16	N-108	3/8”-16 Whiz Flange Nut	2
17	400008	Mount - Floor Pan Hinge Frame	2

REF	PART#	DESCRIPTION	Qty
18 18A 18B	97145 B-190 N-108	Diesel Battery Box 3/8”-16x1 1/2” Carriage Bolt 3/8”-16 Whiz Flange Nut	1 2 2
19	B-123	1/2”-13x1 1/2” Bolt	4
20	W-109	1/2” Flat Washer	4
21	N-157	1/2”-13 Whiz Flange Nut	4
22	97124	60” Crossmember	1
23	72220	Belt Guide Assembly **(Include 24,25,26)**	1
24	72217	Belt Guide Weldment	2
25	72222	1/2”-13x12 1/2” All Thread	1
26	N-110	1/2”-13 Nut	6
27	72222	1/2”-13x12 1/2” All Thread	1
28	N-110	1/2”-13 Nut	7
29	N-103-W	5/16”-18 Whiz Flange Nut	4
30	72216	Pull Stop Weldment	1
31	B-280	1/2”-13x14” Engine Adjustment Bolt	1
32	W-113	5/16” Standard Flat Washer	4
33	B-156	5/16”-18x2” Bolt	4
34	W-107	Shark-Tooth Belleville Washer	1

www.mymowerparts.com

For Dixie Chopper Discount Parts Call 606-678-9623 or 606-561-4983

DIXIE CHOPPER

LP3000-72” FRAME

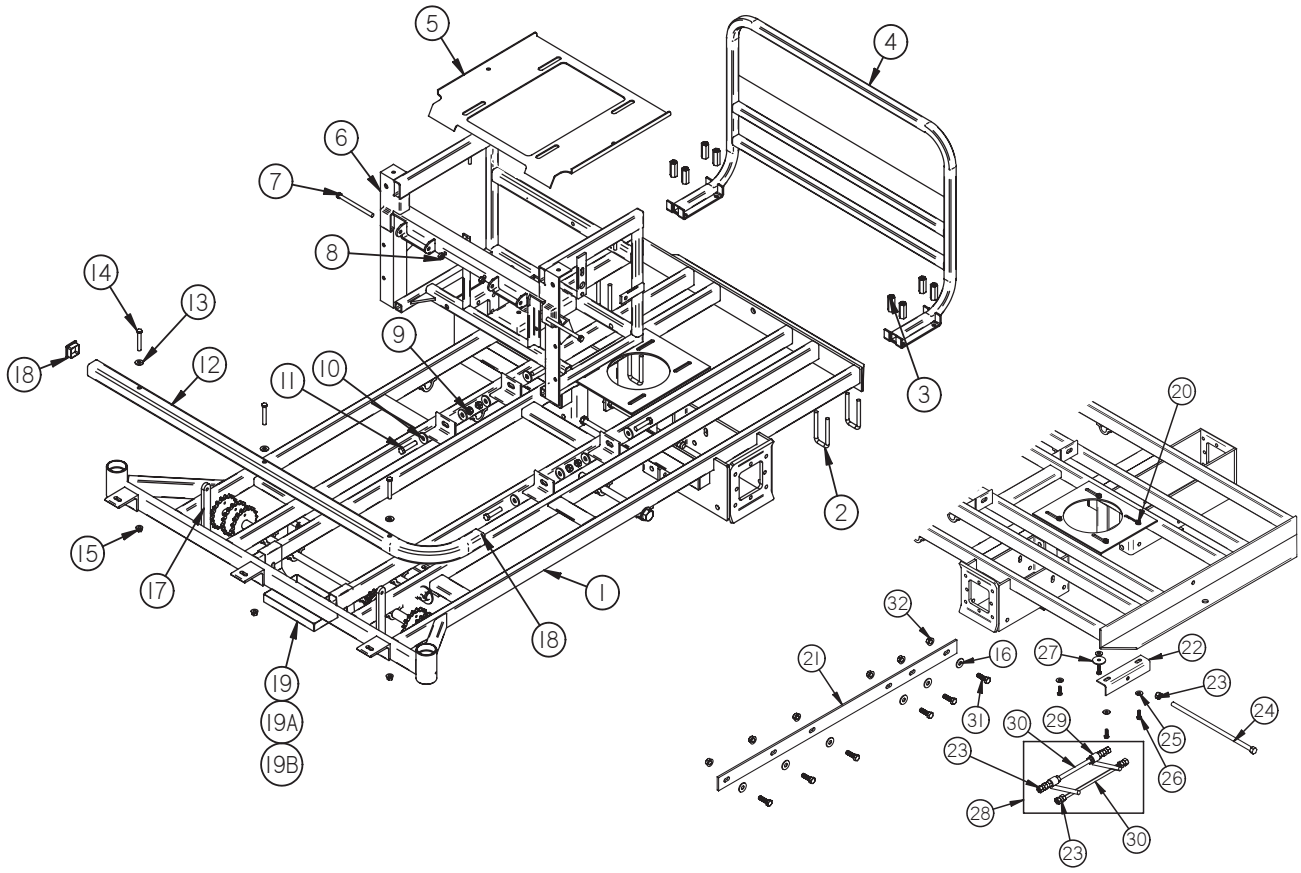

REF	PART#	DESCRIPTION	Qty
1	100067	Frame - LP 72”	1
2	B-204	3/8”-16x1 3/8”w x 3”L U-Bolt	4
3	N-160	3/8”-16 Coupling Nut	8
4	97096	Rear Guard	1
5	400171	Pan - Seat Standard Seat Suspension	1
6	100007	Weldment - Low RideTransmission Frame	1
7	B-229	3/8”-16 x 5” Bolt	2
8	N-107	3/8”-16 Nylon Locknut	2
9	N-135	7/16”-20 Nyloc Nut	4
10	W-168	7/16” Standard Flat Washer Gr. 8	8
11	B-199	7/16”-20 x 2” Grade 8 Bolt	4
12	67045-72	Bumper - XXW	1
13	W-160	10mm Flat Washer	3
14	B-179	3/8-16x2 1/2” Bolt	3
15	N-108	3/8”-16 Whiz Flange Nut	3
16	W-109	1/2” Flat Washer	6
17	400008	Mount - Floor Pan Hinge Frame	2

REF	PART#	DESCRIPTION	Qty
18	97169	Bumper Cap	2
19	97145	Diesel Battery Box	1
19A	B-190	3/8”-16x1 1/2” Carriage Bolt	2
19B	N-108	3/8”-16 Whiz Flange Nut	2
20	N-103-W	5/16”-18 Whiz Flange Nut	4
21	97024	Crossmember	1
22	72216	Pull Stop Weldment	1
23	N-110	1/2”-13 Nut	13
24	B-281	1/2”-13 X 15” Engine Adjustment Bolt	1
25	W-113	5/16” Standard Flat Washer	4
26	B-156	5/16”-18 X 2” Gr. 5 Bolt	4
27	W-107	3/8” X 1 5/8” Belleville Washer	1
28	72220	Belt Guide Assembly(Incl. Ref#’s 23,29,30)	1
29	72217	Belt Guide Weldment	2
30	72222	All Thread 1/2”-13 X 12 1/2”	1
31	B-123	1/2”-13 X 1 1/2” Bolt	6
32	N-157	1/2”-13 Whiz Flange Nut	6

www.mymowerparts.com

For Dixie Chopper Discount Parts Call 606-678-9623 or 606-561-4983

DIXIE CHOPPER

WHEELS & TIRES

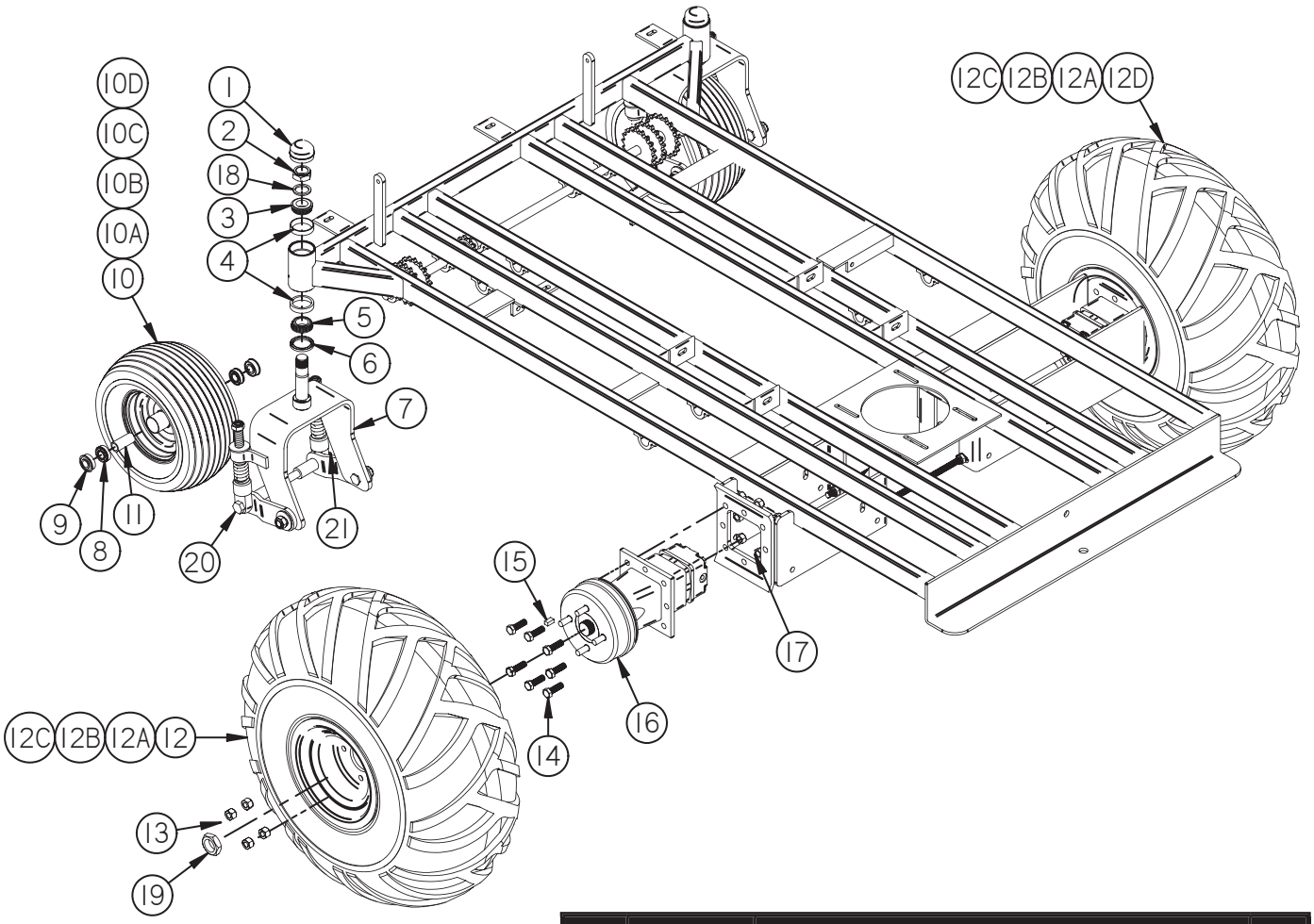

REF	PART#	DESCRIPTION	Qty
1	10220	Dust Cap	2
2	N-183	1”-14 Jam Nyloc	2
3	10207	Top Bearing	2
4	10206	Outer Bearing Race	4
5	97171	Bottom Bearing	2
6	10208	Seal	2
7	100121	Heavy Duty Springer Fork	2
8	67205	Inner Front Wheel Bearing	4
9	10205	Outer Front Wheel Bearing	4
10 10A 10B 10C 10D	400053 400070 400071 10127-S 400129	Assembly - Front Tire Front Tire - 15x600-6 Rim - 4.5”x6”x3.5” (Only) Valve Stem Assembly - Run Flat Tire & Rim 15x6.0x6 **(Optional)**	2
11	67204	Inner Front Wheel Spacer	2

REF	PART#	DESCRIPTION	Qty
12 12A 12B 12C	400019 97200 400014 10127-S	Left Tire Assembly Turf Boss III Tire Rim Valve Stem	1
12D 12A 12B 12C	400020 97200 400014 10127-S	Right Tire Assembly Turf Boss III Tire Rim Valve Stem	1
13	N-113	Lug Nut	8
14	B-123	Wheel Motor Bolt - 1/2”-13x1 1/2”	14
15	300339102	Key	2
16	200018	Wheel Motor 18Cu.In. w/Brake	2
17	N-146	Wheel Motor Nut - 1/2”-13 Lock Nut Stover	14
18	W-131	1” ID x 1 1/2” OD x 1/8” Thick Washer	2
19	PW72693	Axle Nut	2
20	B-295	5/8”-11 X 10 1/2” Bolt	2
21	N-156	5/8”-11 Nyloc Half Nut	2
	68211	Tire Sealant 1 Liter Bottle (Optional) Front Tire @ 1 Liter Rear Tire @ 2 Liter	

www.mymowerparts.com

For Dixie Chopper Discount Parts Call 606-678-9623 or 606-561-4983

DIXIE CHOPPER

2006 FOOT PEDAL ASSEMBLY

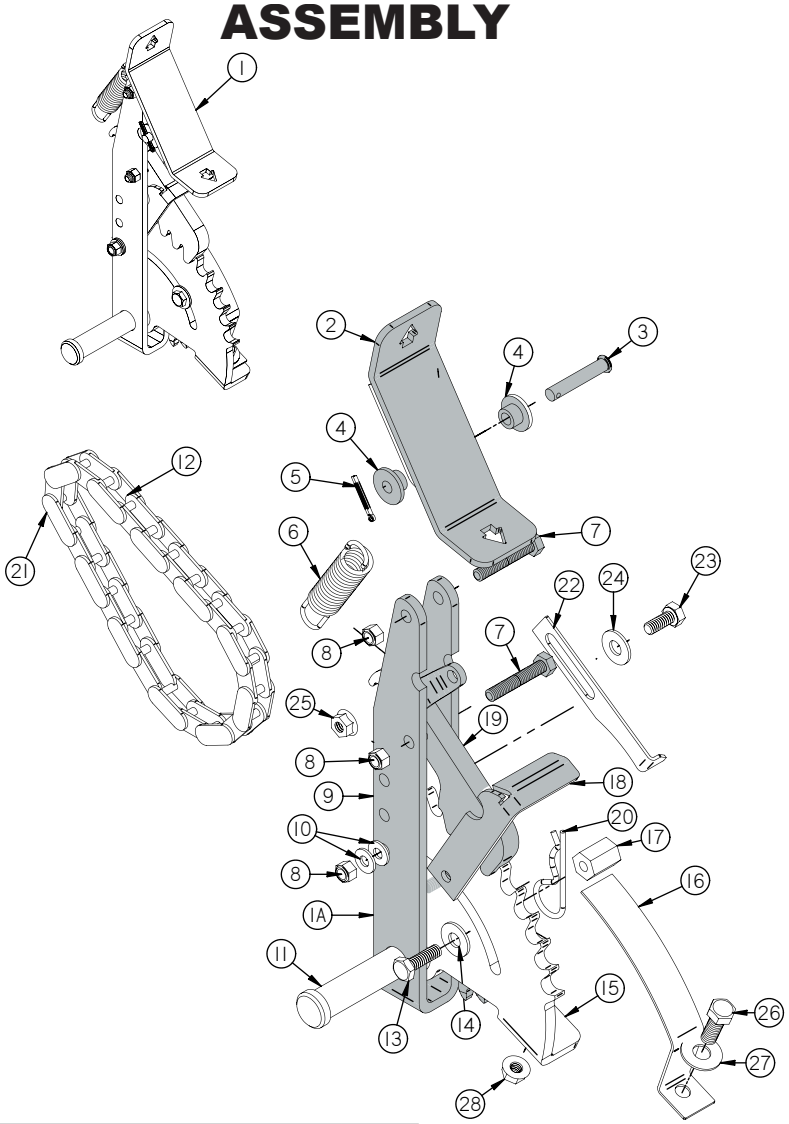

REF	PART#	DESCRIPTION	Qty
1	100136	Assembly - Foot Pedal (Inc. 1A,11,15,16,22)	1
1A	100136-DCM	Weldment - Foot Pedal	1
2	100143	Weldment - Pad Pedal Foot	1
3	P-121	Pin - 5/16” X 1-3/4” Clevis	1
4	20222	Bushing - Nylon	2
5	P-108	Pin - 3/32” X 1-1/2” Cotter	1
6	100151	Spring - Pedal Foot	1
7	B-105	Bolt - 5/16”-18 X 1-3/4” Full Thread	2
8	N-131	5/16”-18 Nyloc Nut	3
9	100137	Weldment - Arm Lift 2006	1
10	W-164	5/16” Spring Washer	2
11	100152	Pin - Pedal Foot	1
12	68217	#50 Chain (Incl Ref. #20)	1
13	B-131	5/16”-18 X 1” Bolt	1
14	W-113	5/16” Standard Flat Washer	1

REF	PART#	DESCRIPTION	Qty
15	100146	Weldment - Sprocket Quarter	1
16	100150	Indicator - Control Height	1
17	N-130	5/16”-18 X 3/4” Coupling Nut	1
18	100153	Lock - Pedal **(Incl. #8,10)**	1
19	100156	Pawl - Pedal Foot	1
20	30213	#27 Hair Clip Pin	1
21	10232	#50 Master Link	1
22	300008	Pointer - Height Deck	1
23	B-107	5/16”-18 X 3/4” HHCS Bolt	1
24	W-113	5/16” Flat Washer	1
25	N-103-W	5/16”-18 Whiz Flange Nut	1
26	B-108	3/8”-16 X 1” HHCS Bolt	1
27	W-104	3/8” Flat Washer	1
28	N-108	3/8”-16 Whiz Flange Nut	1

www.mymowerparts.com

For Dixie Chopper Discount Parts Call 606-678-9623 or 606-561-4983

DIXIE CHOPPER

60” DECK LIFT SYSTEM

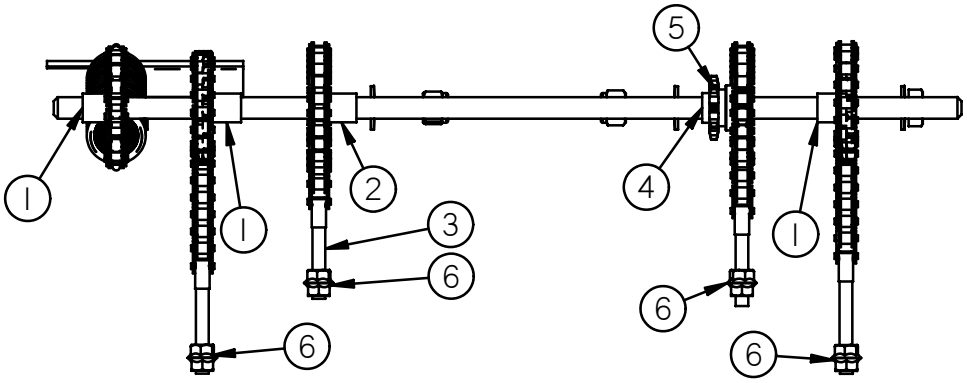

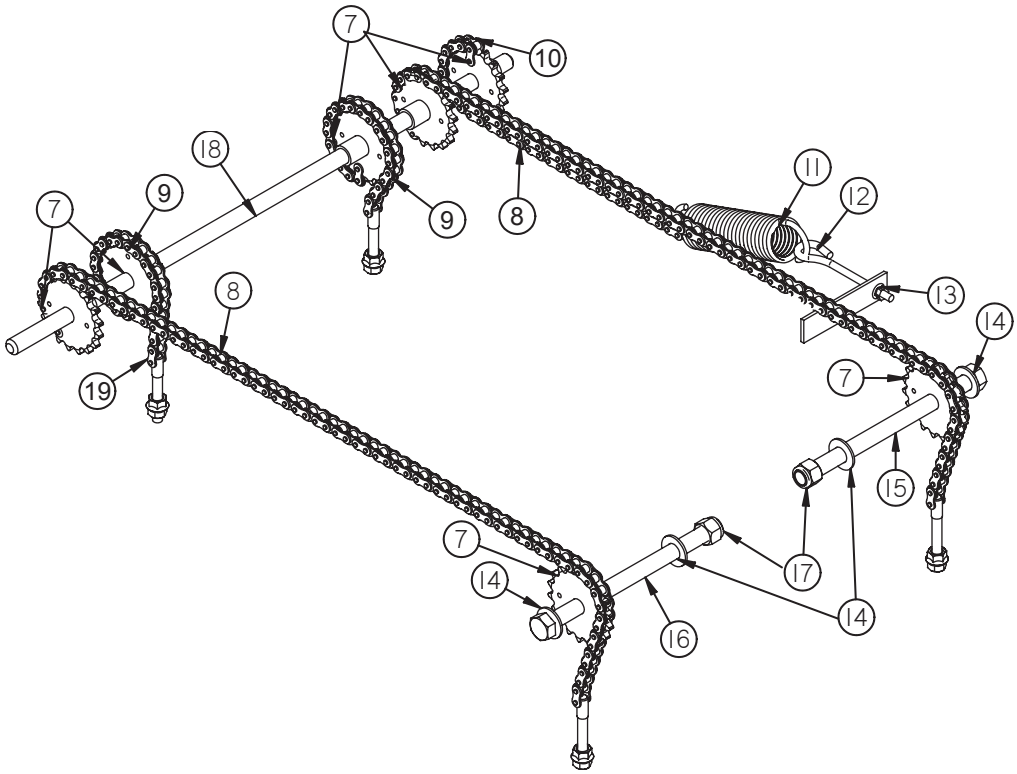

REF	PART#	DESCRIPTION	Qty
1	68112	1” Bushing	3
2	68106	1-3/16” Bushing	1
3	S-114	1/2”-13 Stud	4
4	68105	3/8” Bushing	1
5	68104	#50 Small Sprocket	1
6	N-157	1/2”-13 Whiz Flange Nut	8
7	68103	Deck Lift Sprocket #50	7
8	990710003	#50 Rear Deck Lift Chain	2
9	68217	#50 Front Deck Lift Chain	2
10	990710002	#50 Return Spring Chain	1

REF	PART#	DESCRIPTION	Qty
11	97455	200 lb. Return Spring	1
12	B-241	3/8”-16 Eye Bolt	1
13	N-108	3/8”-16 Whiz Flange Nut	1
14	W-154	3/4” Flat Washer	4
15	B-239	3/4”-9x10” Bolt	1
16	B-238	3/4”-9x8.5” Bolt	1
17	N-158	3/4”-9 Nyloc Nut	2
18	100064	Rod - 3/4”x30.5”	1
19	10232	#50 Master Link	10

www.mymowerparts.com

For Dixie Chopper Discount Parts Call 606-678-9623 or 606-561-4983

DIXIE CHOPPER

72” DECK LIFT SYSTEM

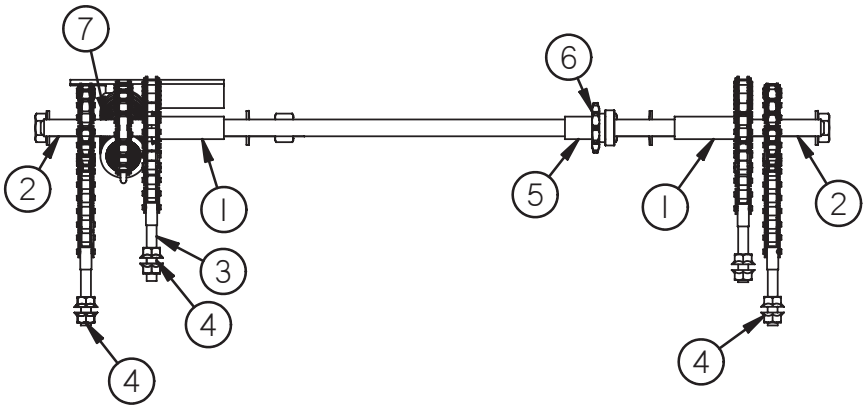

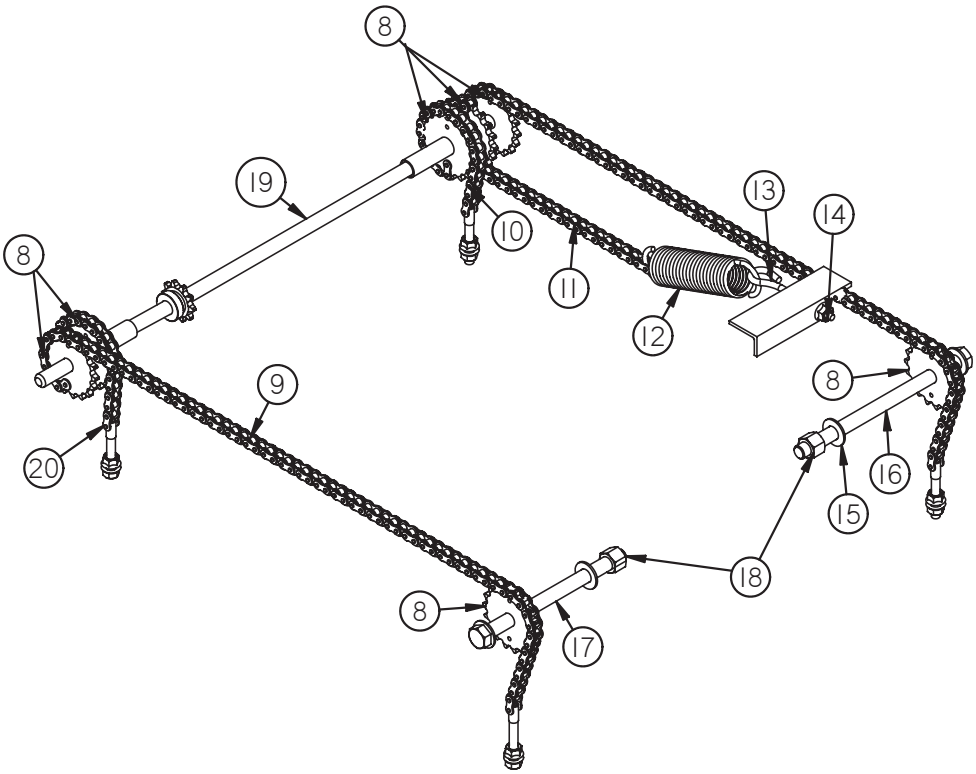

REF	PART#	DESCRIPTION	Qty
1	68108	2-7/8” Long Bushing	2
2	65047	3/4” Long Bushing	2
3	S-114	1/2”-13 Stud	4
4	N-157	1/2”-13 Whiz Flange Nut	8
5	68105	3/8” Long Bushing	1
6	68104	#50 Small Sprocket	1
7	68106	1-3/16” Bushing	1
8	68103	Deck Lift Sprocket #50	7
9	990710005	#50-67P Rear Deck Lift Chain	2
10	68217	#50 Front Deck Lift Chain	2
11	990710002	#50 Return Spring Chain	1

REF	PART#	DESCRIPTION	Qty
12	97456	225 lb. Return Spring	1
13	B-241	3/8”-16 Eye Bolt	1
14	N-108	3/8”-16 Whiz Flange Nut	1
15	W-154	3/4” Flat Washer	4
16	B-240	3/4”-9x11” Bolt	1
17	B-239	3/4”-9x10” Bolt	1
18	N-158	3/4”-9 Nyloc Nut	2
19	68110	3/4” x 34 3/4” Rod	1
20	10232	#50 Master Link	10

www.mymowerparts.com

For Dixie Chopper Discount Parts Call 606-678-9623 or 606-561-4983

DIXIE CHOPPER

60” DECK

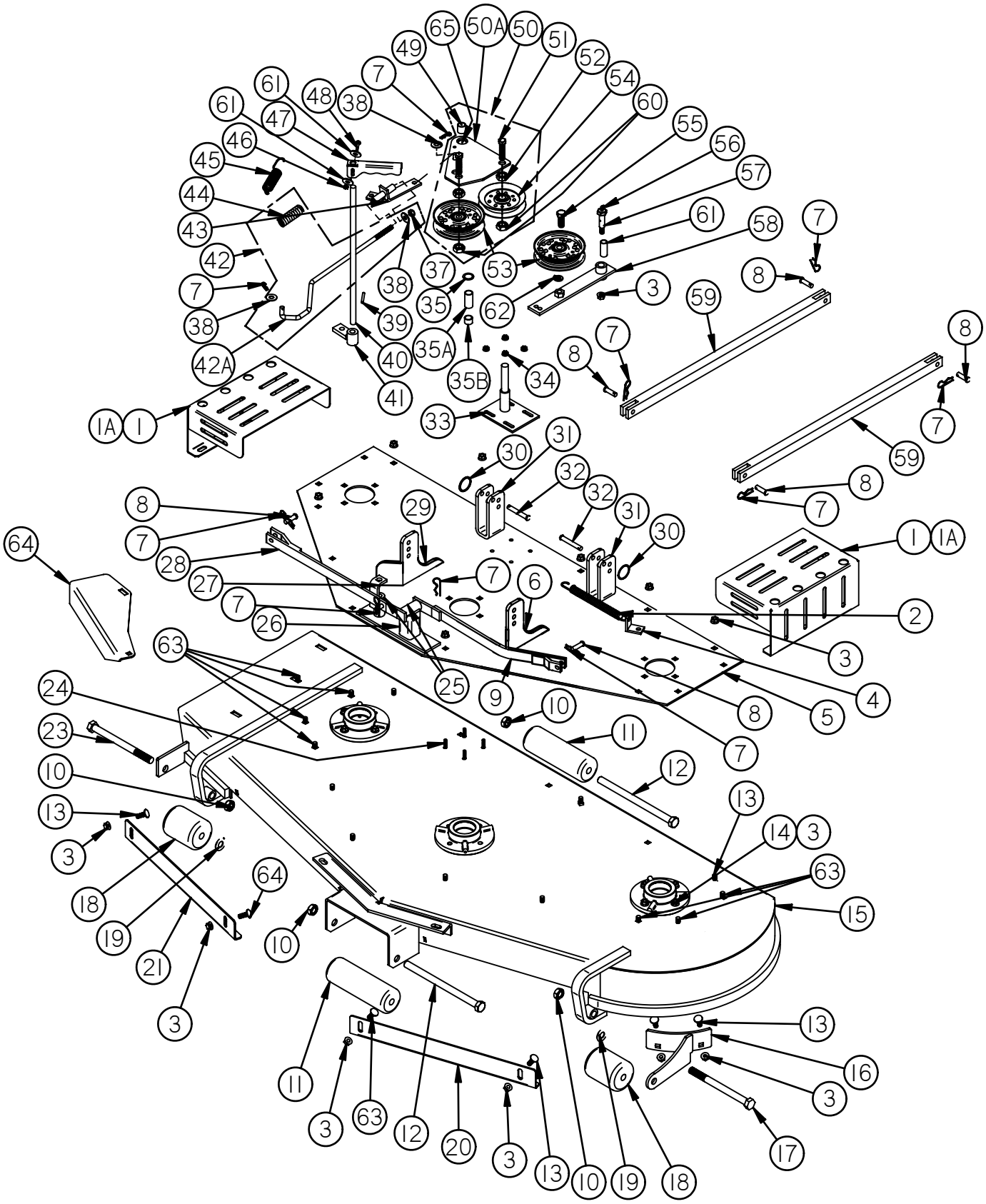

www.mymowerparts.com

For Dixie Chopper Discount Parts Call 606-678-9623 or 606-561-4983

DIXIE CHOPPER

60” DECK

REF	PART#	DESCRIPTION	Qty
	300195	**2006 60” Deck Assembly**	
1 1A	300056 300048	Pulley Guard Deck Pulley Guard Kit F/Fan Set-Up **(Optional)**	2
2	300324	Spring	1
3	N-108	3/8” Whiz Flange Nut	37
4	65308-L	Idler Spring Tab	1
5	300226	2006 60” Top Plate Weldment	1
6	300229	Left 3-Hole Tab	1
7	20224	Hairpin Clip	10
8	P-102	3/8”x1.25” Clevis Pin	6
9	30232	Left Scissor Arm	1
10	N-156	5/8”-11 Nyloc Jam Nut	4
11	30240-O	Long Roller (7.5” Long)	2
12	B-255	5/8”-11x9” Carriage Bolt	2
13	B-110	3/8”-16x3/4” Carriage Bolt	17
14	B-136	3/8”-16x1.25” Carriage Bolt	12
15	300343	2006 60” Deck Weldment **(Include #16,20,21,63,65)**	1
16	300333	2006 Weldment - Roller Bracket	1
17	B-253	5/8”-11x6” Carriage Bolt	1
18	67240	Short Roller (3.75” Long)	2
19	W-135	5/8” Flat Washer	2
20	300345	2006 Left 60” Bolt-On Blow Out Baffle	1
21	300344	2006 Right 60” Bolt-On Blow Out Baffle	1
23	B-254	5/8”-11x7” Carriage Bolt	1
24	B-172	1/4”-20x1” Bolt	4
25	F-100	3/16” Drive in Grease Fitting	2
26 27	67131	Scissor Link Tower Weldment Engaging Tower Weldment	1 1
28	30231	Right Scissor Arm	1
29	300228	Right 3-Hole Tab	1
30	C-104	Ring Clip	2
31	334000130109	3-Hole Tab (Rear)	2
32	P-103	3/8” x 2” Clevis Pin	2
33	300349	Pivot Stand	1
34	N-102	1/4”-20 Whiz Flange Nut	4

REF	PART#	DESCRIPTION	Qty
35 35A 35B	30112 10203 65278	1/8” Shim (if needed) 1” Shim (if needed) 1/2” Shim (if needed)	* * *
37	N-107	3/8 -16 Nylon Lock Nut	1
38	W-104	3/8” Flat Washer	7
39	P-113	Roll Pin	1
40	30211	Engaging Shaft	1
41	30210	Cam Weldment	1
42	30209-1	Engaging Rod Assembly (Inc. #37,38,42A,43,44)	
42A	97343	Engaging Rod	1
43	30209-B	Connecting Arm Bracket	1
44	30207-S	Engaging Spring	1
45	20217-25	Return Spring	1
46	N-173	#10-24 Nyloc Nut	1
47	30212	Engaging Handle (Coated)	1
48	B-245	#10-24 Carriage Bolt	1
49	30206	5/8”x3/4”x1 1/2”Bushing	1
50	300012	Triangle Plate Assembly (Inc.#49,50A,51,52,60,66)	
50A	300011	Weldment - Triangle Plate	1
51	B-185	5/8”-11 x 2” Bolt	2
52	N-180	5/8”-11 Jam Lock Nut	2
53	30224	Flat Idler Pulley	2
54	30234	V Pulley	1
55	B-117	1/2”-13x1.25” Bolt	1
56	F-101	1/4”-28 90 Grease Fitting	1
57	B-118-G	1/2 x 1 1/2 Shoulder Bolt **(Incl.- Ref. #56)**	1
58	30223	Idler Arm	1
59	30214-86	Stabilizer Bar	2
60	N-181	5/8 - 11 Center Lock nut	2
61	65276	Bronze Bushing	1
62	W-112	1/2” Lock Washer	1
63	B-135	3/8”-16x1” Carriage Bolt	7
64	300220	Baffle - Wiper Deck	1
65	F-102	Fitting - Grease 1/4”-28	1
66	W-186	#10 Flat washer	2

www.mymowerparts.com

For Dixie Chopper Discount Parts Call 606-678-9623 or 606-561-4983

DIXIE CHOPPER

72" DECK

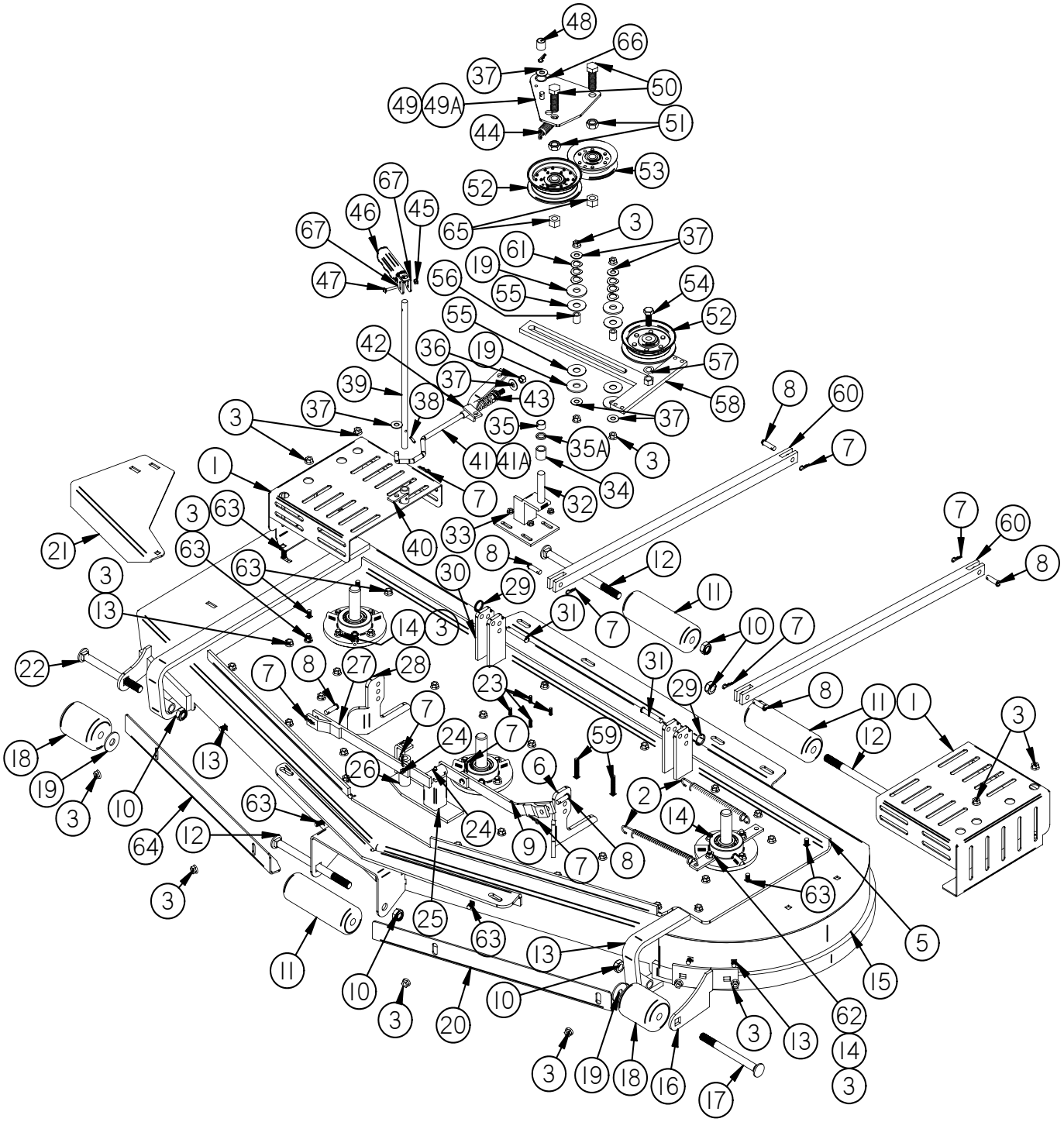

www.mymowerparts.com

For Dixie Chopper Discount Parts Call 606-678-9623 or 606-561-4983

DIXIE CHOPPER

72” DECK

REF	PART#	DESCRIPTION	Qty
	300360	Guardian 72” Complete Deck	
1 1A	300057 300049	Pulley Guard Deck Pulley Guard Kit F/Fan Set-up **(Optional)(Not Shown)**	2
2	300324	Spring	2
3	N-108	3/8” Whiz Flange Nut	52
4	65308	Idler Spring Tab	2
5	300253	72” Top Plate Weldment	1
6	300229	Left 3-Hole Tab	1
7	20224	Hairpin Clip	10
8	P-102	3/8”x1.25” Clevis Pin	6
9	30232	Left Scissor Arm	1
10	N-156	5/8”-11 Nyloc Jam Nut	5
11	30240-O	Long Roller	3
12	B-255	5/8”-11x9” Carriage Bolt	3
13	B-110	3/8”-16x3/4” Carriage Bolt	28
14	B-136	3/8”-16x1.25” Carriage Bolt	10
15	300355	72” Deck Weldment **(Includes 16,20,63,65,21)**	1
16	300359	Weldment - Roller Bracket 72”	1
17	B-253	5/8”-11x6” Carriage Bolt	1
18	67240	Short Roller	2
19	W-135	5/8” Flat Washer	6
20	300357	2006 72” Left Bolt-On Blowout Baffle	1
21	300356	2006 72” Baffle - Wiper Blade	1
22	B-254	5/8”-11x7” Carriage Bolt	1
23	B-172	1/4”-20x1” Bolt	4
24	F-100	3/16” Drive in Grease Fitting	2
25 26	67131	Scissor Link Tower Weldment Engaging Tower Weldment	1 1
27	30231	Right Scissor Arm	1
28	300228	Right 3-Hole Tab	1
29	C-104	Ring Clip	2
30	300086	3 Hole Tab	4
31	P-103	3/8” x 2 1/4” Clevis Pin	2
32	300349	Pivot Stand F/ Generac 72”	1
33	N-102	1/4” - 20 Whiz Flange Nut	4
34	10203	1” Shim (if needed)	

REF	PART#	DESCRIPTION	Qty
35	65278	1/2” Shim (if needed)	
35A	30112	1/8” Shim (if needed)	
36	N-107	3/8 -16 Nylon Lock Nut	1
37	W-104	3/8” Flat Washer	7
38	P-113	3/16”x1” Roll Pin	1
39	30211	Engaging Shaft	1
40	30210	Cam Weldment	1
41	30209-1	Engaging Rod Assembly (Inc. #36,37,41A,42,43)	
41A	97343	Engaging Rod	1
42	30209-B	Connecting Arm Bracket	1
43	30207-S	Engaging Spring	1
44	20217-25	Return Spring	1
45	N-173	#10-24 Nyloc Nut	1
46	30212	Engaging Handle	1
47	B-245	#10-24x1 1/4” Carriage Bolt	1
48	30206	3/4”x1 1/2” Bushing (Brass)	1
49	300012	Triangle Plate Assembly Inc. #48,49A,50,51,66,67	
49A	300011	Weldment- Triangle Plate	1
50	B-185	5/8”-11 x 2” Bolt	2
51	N-180	5/8”-11 Jam Lock Nut	2
52	30224	Flat Idler Pulley	2
53	30234	V Idler Pulley	1
54	B-117	1/2”-13x1.25” Bolt	1
55	W-140	5/8” ID. x 1 5/8” OD. Nylon Washer	4
56	61250	T-Idler Slide Bushing	2
57	W-112	1/2” Lock Washer	1
58	68225	T-Idler Slide	1
59	B-223	3/8”-16x2 1/4” Carriage Bolt	2
60	30214-72	Stabilizer Bar	2
61	W-149	5/8” Wafer Spring Washer (Use 10 If Needed)	6
62	B-190	3/8”-16x1 1/2” Carriage Bolt	2
63	B-135	3/8”-16x1” Carriage Bolt	8
64	300358	2006 72” Right Bolt-On Blowout Baffle	1
65	N-181	5/8”-11 Center Lock Nut	2
66	F-102	Fitting - Grease 1/4”-28	1
67	W-186	#10 Flat Washer	2

www.mymowerparts.com

For Dixie Chopper Discount Parts Call 606-678-9623 or 606-561-4983

DIXIE CHOPPER

60” OCDC

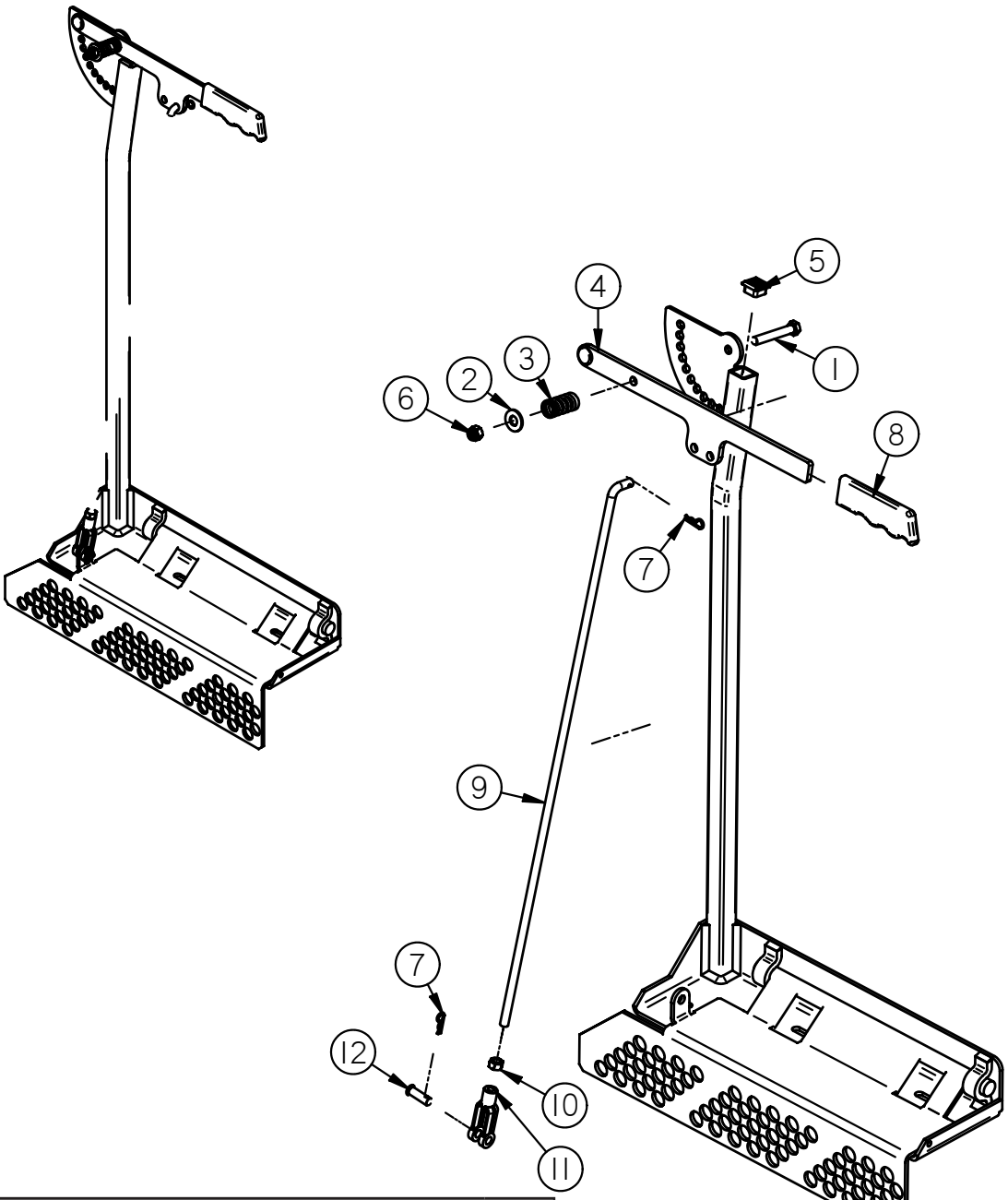

REF	PART#	DESCRIPTION	Qty
	300350	Assembly - OCDC LP 60”	
	B-135 N-108	3/8”-16x1” **(Carriage Bolt Hardware to Bolt to Deck)** 3/8”-16 Whiz Flange Nut **(Deck 3 Each)**	
1	B-179	3/8”-16 x2.5” Bolt	1
2	W-104	3/8” Standard Flat Washer	1
3	20252	Spring	1
4	900014	Handle	1
5	68142	1”x1” Plastic Plug	1
6	N-107	3/8”-16 Nyloc Nut	1
7	20224	Clip	2
8	67258	Handle Grip	1

REF	PART#	DESCRIPTION	Qty
9	68130	Control Rod (Inc. #9,10,11)	1
10	N-150	3/8”-24 Nut	1
11	N-155	3/8”-24 Yoke	1
12	P-102	3/8”x1.25” Clevis Pin	1
	68136	Lower Screen **(Optional Part Not Shown)**	1
	W-109	1/2” Standard Flat Washer	2
	B-138	1/2”-13x1” Bolt	2
	N-157	1/2”-13 Whiz Flange Nut	2

www.mymowerparts.com

For Dixie Chopper Discount Parts Call 606-678-9623 or 606-561-4983

DIXIE CHOPPER

72” OCDC

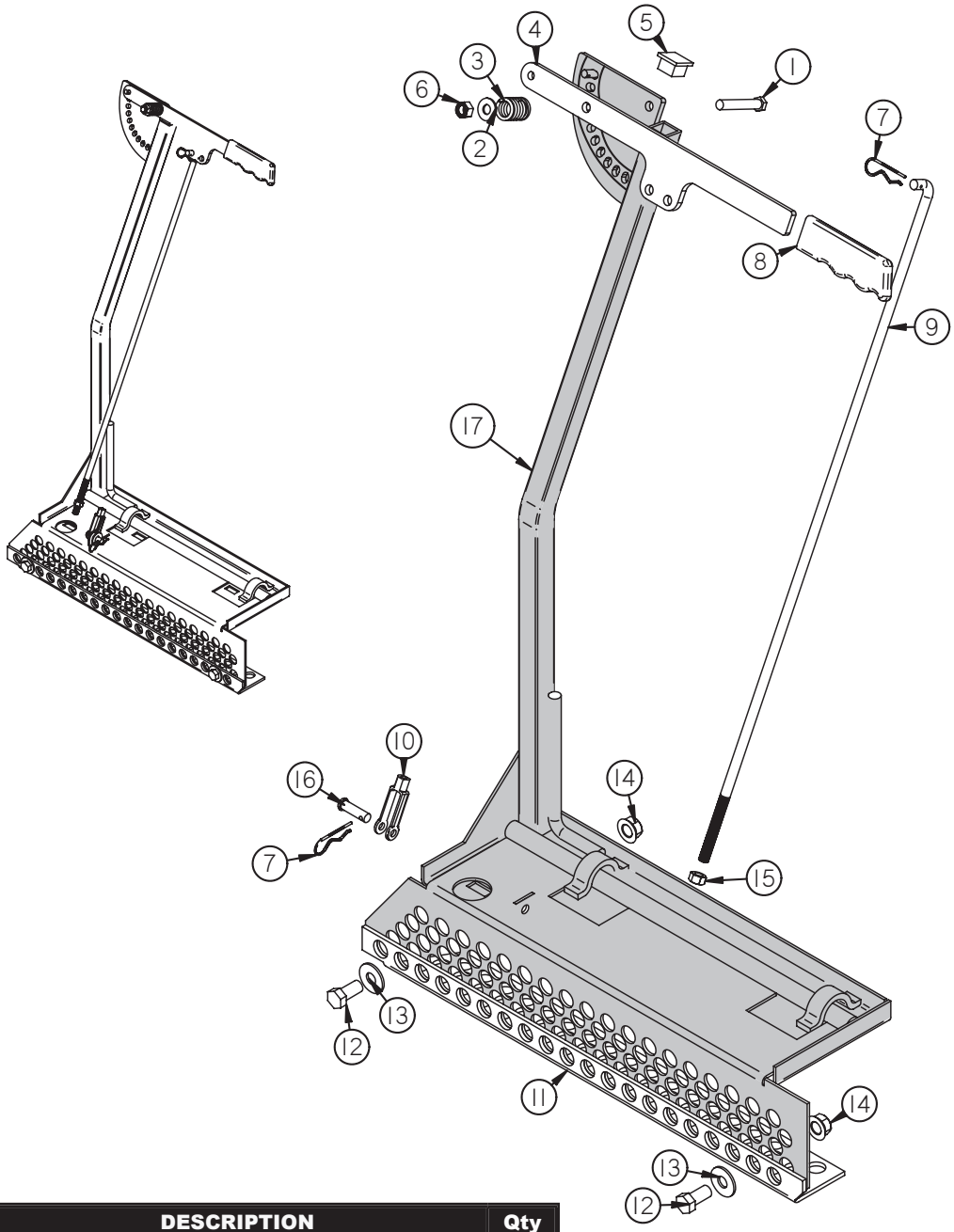

REF	PART#	DESCRIPTION	Qty
	72122	Assembly - 72” OCDC	
	B-135 N-108	3/8”-16x1” **(Carriage Bolt Hardware to Bolt to Deck)** 3/8”-16 Whiz Flange Nut **(Deck 3 Each)**	
1	B-179	3/8”-16 x2.5” Bolt	1
2	W-104	3/8” Standard Flat Washer	1
3	20252	Spring	1
4	900014	Handle	1
5	68142	1”x1” Plastic Plug	1
6	N-107	3/8”-16 Nyloc Nut	1
7	20224	Clip	2
8	67258	Handle Grip	1

REF	PART#	DESCRIPTION	Qty
9	68130	Control Rod (Inc. #9,10,15)	1
10	N-155	3/8”-24 Yoke	1
11	72123	Lower Screen **(Optional)**	1
12	B-138	1/2”-13x1” Bolt	2
13	W-109	1/2” Standard Flat Washer	2
14	N-157	1/2”-13 Whiz Flange Nut	2
15	N-150	3/8”-24 Nut	1
16	P-102	3/8”x1.25” Clevis Pin	1
17	68122-72W	Weldment - 72” OCDC	1

www.mymowerparts.com

For Dixie Chopper Discount Parts Call 606-678-9623 or 606-561-4983

DIXIE CHOPPER

HUBS AND BELTS

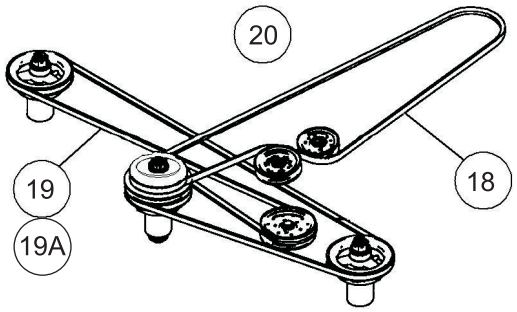

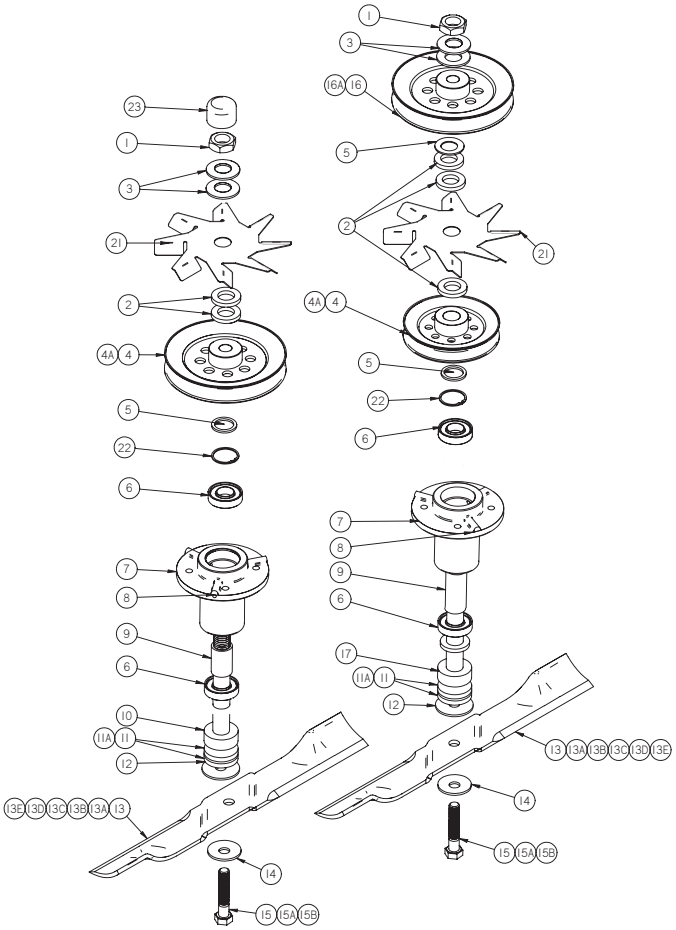

REF	PART#	DESCRIPTION	Qty
	10161 10161-L	Outside Complete Spindle Asm. Center Complete Spindle Asm.	
	10161-HD (Opt.) 10161-LHD (Opt.)	Heavy Duty Outside Complete Only Heavy Duty Center Complete Only	
1	N-167	1” Nut	3
2	W-146	1/4” Washer	7
3	W-137	1” Belleville Washer	6
4 4A	9907525X100S 9907675X100S	5.25” Pulley **(LP-60)** 6.75” Split Pulley **(LP-72)**	3
5	W-131	1/8” Washer	4
6	30218	Sealed Bearing	
7	30241	Deck Hub **(2 - #22, 2 - #6 & 1 - #9)**	3
8	F-102	Grease Fitting	3
9	30219	Inner Deck Hub Spacer	
10	30217	Short Blade Shaft	2
11 11A	W-182 30242	1/2” OD. x .656 ID. X 1/4” Thick Washer 1/2” Blade Spacer (Use when H & N blade are used)	6
12	W-101	Fiber Washer	3
13 13A 13B	30227-60X 30227-60H 30227-60N	60” X Style Blade **(LP-60)** 60” Standard High Lift Blade **(Optional)** 60” Heavy Duty High Lift Blade **(Optional)**	3
13C 13D 13E	30227-72X 30227-72H 30227-72N	72” X Style Blade **(LP-72)** 72” Standard High Lift Blade **(Optional)** 72” Heavy Duty High Lift Blade **(Optional)**	3

REF	PART#	DESCRIPTION	Qty
14	W-100	5/8” Belleville Washer	3
15 15A 15B	B-121 B-121-L B-121-LL	2.5” Blade Bolt (use w/o blade spacer) 3” Blade Bolt (use with blade spacer) 3.25” Blade Bolt (use with Whiz-Mow)	3
16 16A	9907675X100S 9907750X100S	6.75” Pulley **(LP-60)** 7.50” Pulley **(LP-72)**	1
17	30217-L	Long Blade Shaft	1
18	2006B88W	Engine - Deck Belt B-88	1
19 19A	2006B130R 2006B160R	Deck Belt (B-130) **(LP-60)** Deck Belt (B-160) **(LP-72)**	1
20	2006B42R	Engine-Trans. Belt B-42(not shown)	1
21	300058	Fan - 1” x 8 1/4” Steel Gray & Decal	3
22	788080	Retainer Ring	
23	67255	Spindle Hub Caps	2

www.mymowerparts.com

For Dixie Chopper Discount Parts Call 606-678-9623 or 606-561-4983

DIXIE CHOPPER

TRANSMISSION FRAME ASSEMBLY

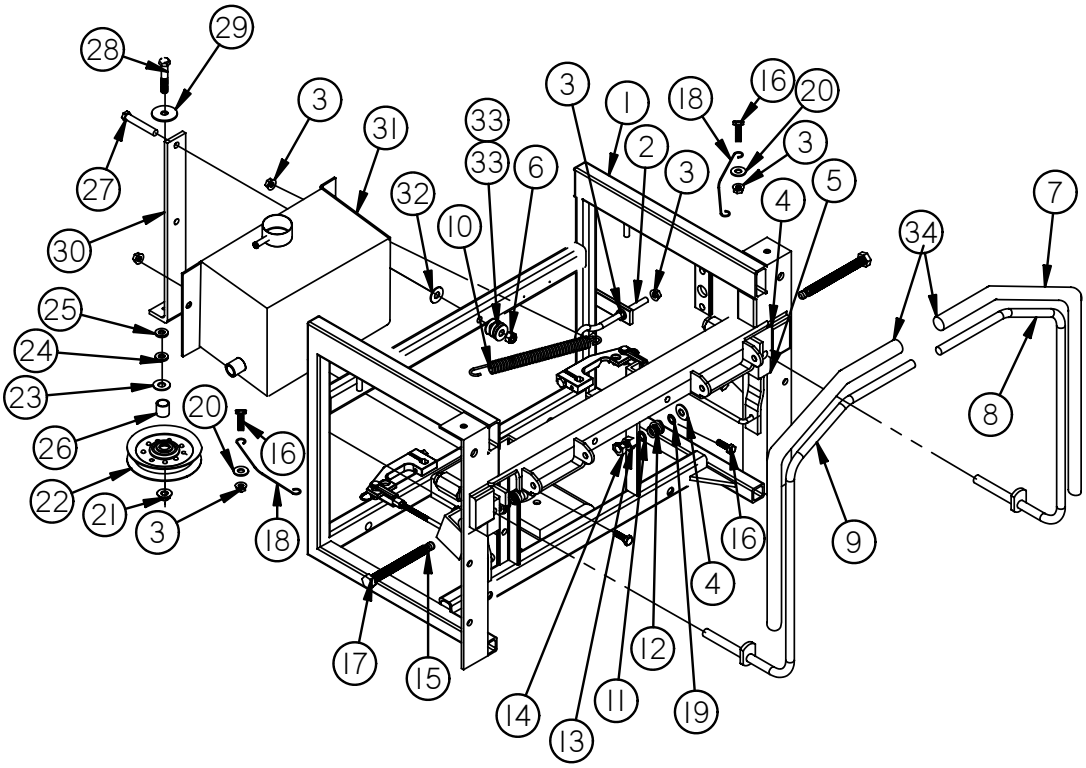

REF	PART#	DESCRIPTION	Qty
1	100007	Low Ride Transmission Frame	1
2	B-150	5/16” x 2 1/2” Eye Bolt	1
3	N-103-W	5/16”-18 Whiz Flange Nut	8
4	W-171	1/2”ID.x1 1/4”OD. Teflon Washer	4
5	65205	Steering Block Weldment	2
6	300324	Spring	1
7	400201	Foam Lever Sleeve	2
8	400069	Left Steering Lever	1
9	400068	Right Steering Lever	1
10	N-107	3/8”-16 Nylon Lock Nut	1
11	W-110	1/2” Machine Washer	2
12	20252	Spring	2
13	N-110	1/2”-13 Hex Nut	2
14	N-111	1/2”-13 Hex Jam Nut	2
15	F-101	1/2”-28 Grease Fitting 90 degree	2
16	B-131	5/16”-18x1” Gr. 5 Bolt	4
17	B-143-G	1/2”-13x4 1/2” Bolt w/Grease Fitting	2
18	40218	Seat Strap	2
19	W-156	9/16” Standard Flat Washer	2
20	W-113	5/16” Standard Flat Washer	4

REF	PART#	DESCRIPTION	Qty
21	N-117	3/8”-16 Large Flange Lock Nut	1
22	30234	4-1/4” V-Idler Pulley	1
23	W-124	3/8” Machine Washer .120” (As Needed)	
24	W-123	3/8” Machine Washer .060” (As Needed)	
25	W-176	3/8” Machine Washer .031” (As Needed)	
26	97415	Spacer	1
27	B-165	3/8”-16x2” Bolt	1
28	B-124	3/8”-16x1 3/4” Gr. 5 Bolt	1
29	W-104	3/8 Standard Flat Washer	1
30	100011	Idler Arm	1
31	200008	Hydraulic Tank	1
32	W-125	3/8”x7/8” Plastic Washer	1
33	W-126	3/8” Dish Spring Washer	3
34	400228	Cap - End Plastic Black Lever Steering	2

www.mymowerparts.com

For Dixie Chopper Discount Parts Call 606-678-9623 or 606-561-4983

DIXIE CHOPPER

TRANSMISSION FRAME ASSEMBLY (CONT'D)

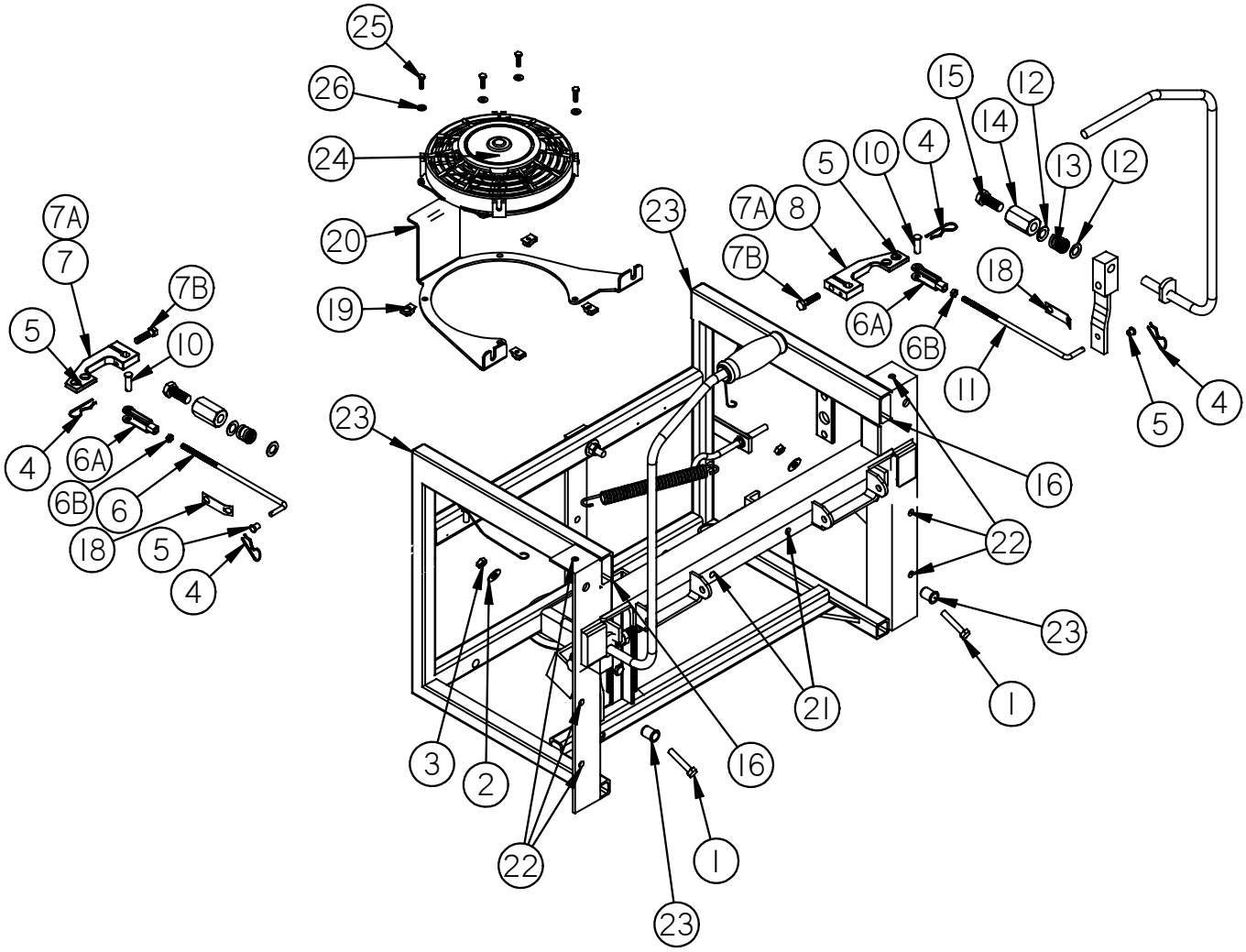

REF	PART#	DESCRIPTION	Qty
1	B-129	5/16"-18x2 1/4" Full Thread Bolt	2
2	W-113	5/16" Standard Flat Washer	2
3	N-103	5/16"-18 Standard Hex Nut	2
4	20224	Hairpin Clip	4
5	20222	Plastic Bushing	4
6 6A 6B	200020 20214 N-105	Right Pump Control Rod (Incl. #6,6A, 6B) Yoke - 5/16"-24 Nut - 5/16"-24	1 1 1
7 7A 7B	200004 P-118 B-131	Right Pump Control Arm (Incl. #7A, 7B) Roll Pin - 3/16"x1 1/2" Bolt - 5/16"-18	1 1 1
8	200005	Left Pump Control Arm (Incl. #7A, 7B)	1
10	P-101	Pin - 5/16"x1" Clevis	2
11	200019	Left Pump Control Rod (Incl. #11,6A, 6B)	1
12	W-110	Washer - 1/2" Machine	4

REF	PART#	DESCRIPTION	Qty
13	20252	Spring	2
14	N-175	Coupling Nut - 1/2"-13x1.850 Long	2
15	B-138	Bolt - 1/2"-13x1"	2
16	67256	Plastic Plug 1"x2"	2
18	20223	Backing Clip	2
19	C-105	10-24 U-Clips	4
20	200042	Electric Fan Mount	1
21	N-188	1/4"-20 AR Series Threaded Insert	2
22	N-152	1/4"-20 Nut Insert	6
23	N-153	5/16"-18 Insert Nut	4
24	200043	Electric Fan	1
25	B-203	10-24x3/4" S.S. Bolt	4
26	W-152	#10 S.S. Washer	4

www.mymowerparts.com

For Dixie Chopper Discount Parts Call 606-678-9623 or 606-561-4983

DIXIE CHOPPER

TRANSMISSION & DRIVE
18 Series Pumps

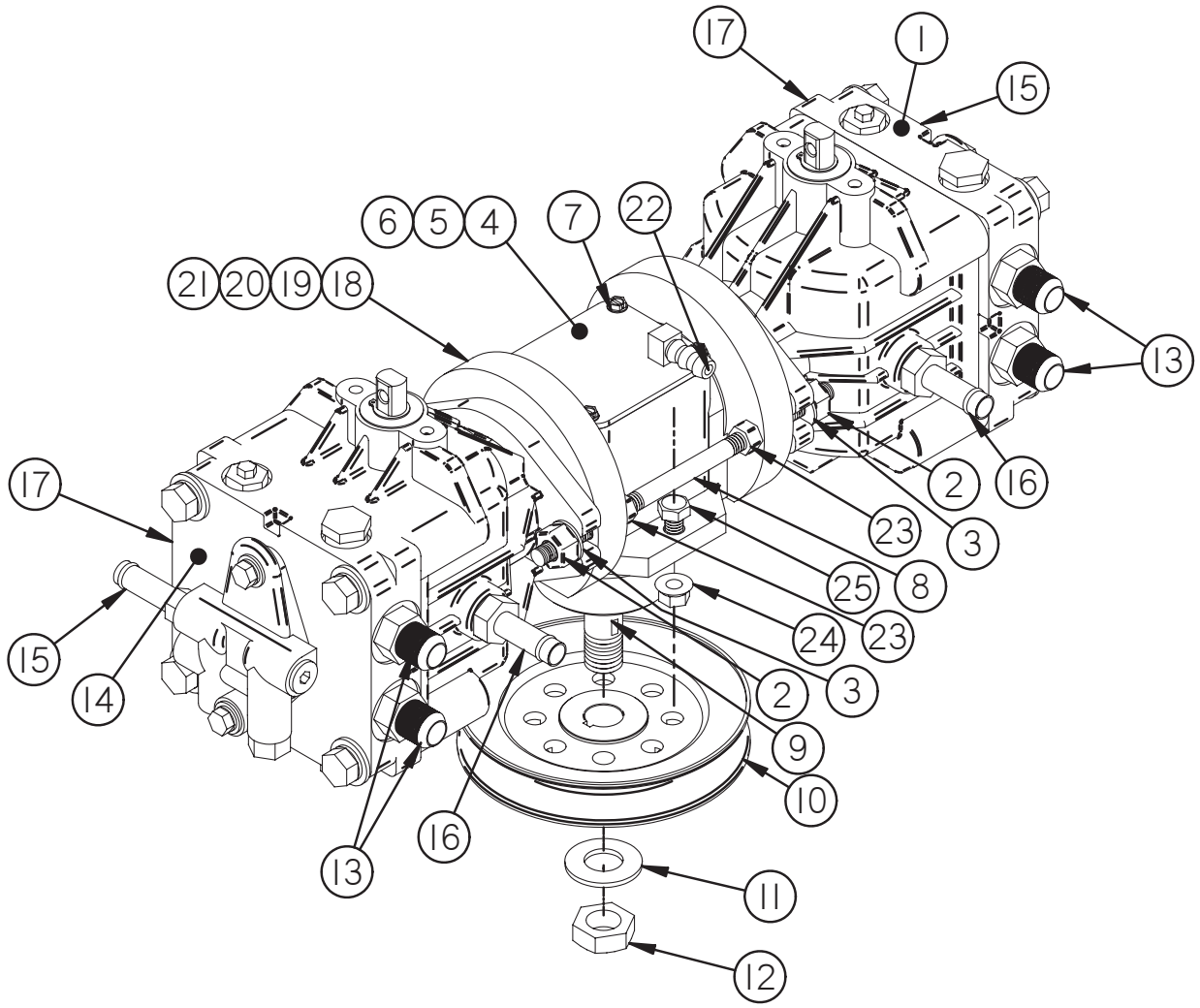

REF	PART#	DESCRIPTION	Qty
1	200086	Pump -18 Ser. Right	1
2	N-168	3/8”-24 Whiz Flange Nut	4
3	W-169	5/16” Grade 8 Flat Washer	4
4	000365201-L	T-Gear Box **(Complete Gear Box Only)**	1
5	788101	T-Box Gasket	1
6	772150	T-Box Cover Plate	1
7	792025	T-Box Cover Plate Bolt	4
8	65206	3/8” Threaded Rod	2
9	K-102	Woodruff Key 3/16”x3/4”	1
10	200083	5.75” Deep Groove Transmission Pulley	1
11	W-132	3/4” Belleville Washer	1
12	N-114	3/4”-16 Jam Nut	1
13	65004	High Pressure Port Fitting	4

REF	PART#	DESCRIPTION	Qty
14	200085	Pump -18 Ser. Left	1
15	200088	3/8” ORB - 1/2” Bead	2
16	200089	Straight 1/2” ORB - 1/2” Bead Fitting	2
17		Dump Valve	
18	200003	Bell Housing - 16 Ser. Pump	2
19	788030B	Bearing Plate Gasket	2
20	792026	Bell Housing Bolt	8
21	65024	Pump O Ring	2
22	68031	T-Box Fitting (Brass)	1
23	N-184	3/8”-24 Gr. 8 Standard Hex Nut	4
24	N-108	3/8”-16 Whiz Nut	2
25	B-108	3/8”-16 X 1” HHCS Bolt	2

www.mymowerparts.com

For Dixie Chopper Discount Parts Call 606-678-9623 or 606-561-4983

DIXIE CHOPPER

18 Cu. In WHEEL MOTOR

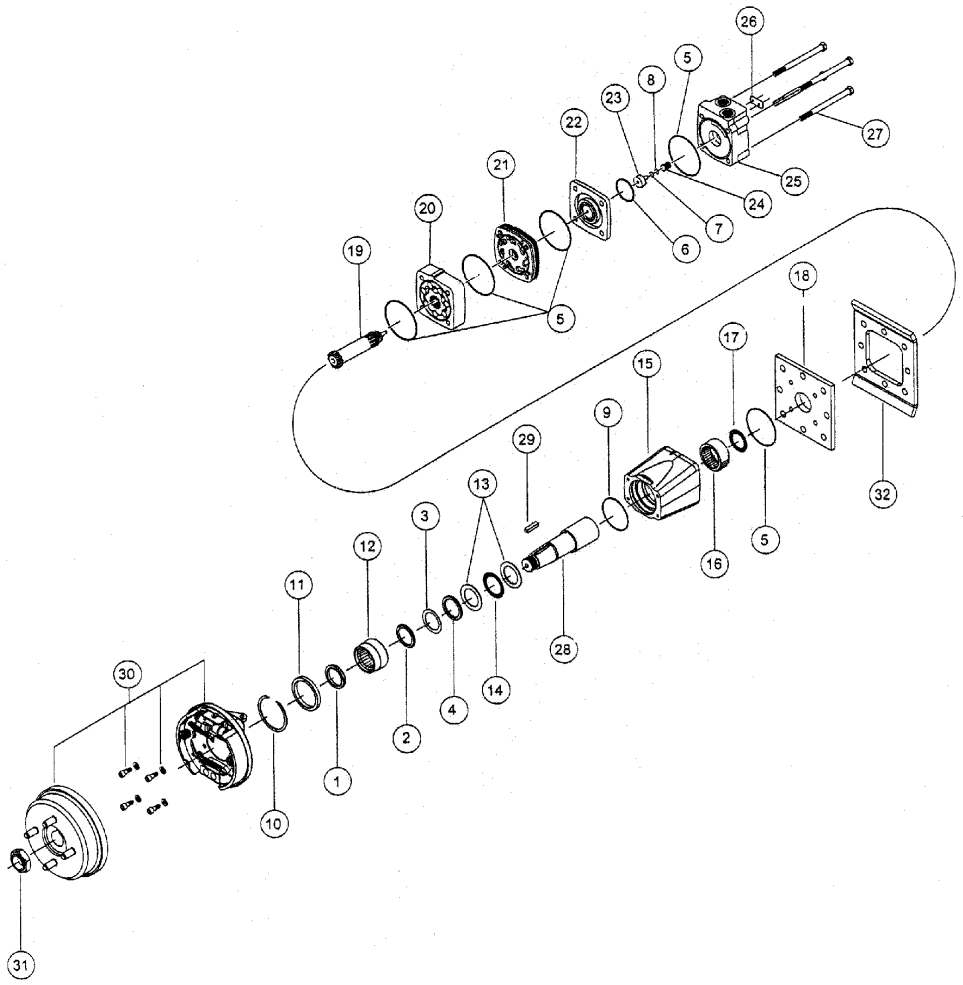

REF	PART#	DESCRIPTION	Qty
	200018	18 Cu. In. Wheel Motor w/Brake System	2
	300333850	Seal Kit - Contains Items 1-9	
1	In-Kit	Dust Seal	1
2	In-Kit	Metal Back Up Ring	1
3	In-Kit	Back Up Seal	1
4	In-Kit	Shaft Seal	1
5	In-Kit	Body Seal	5
6	In-kit	Commutator Seal	1
7	In-Kit	O-Ring Seal	1
8	In-Kit	Back Up Seal	1
9	In-Kit	Housing Seal	1
10	700018013	Retaining Spacer	1
11	700018085	Bearing Spacer	1
12	300018021	Front Thrust Bearing	1
13	300018002	Thrust Bearing	2
14	300018003	Front Thrust Bearing	1
15	300130035	“35” Housing Kit **(Incl. Ref. #16)**	1

REF	PART#	DESCRIPTION	Qty
16	500018003	Rear Housing Bearing	1
17	300018107	Rear Thrust Bearing	1
18	300012016	Mid Mount Plate	1
19	300014027	18 Drive Link	1
20	300332018	18 Rotor Set	1
21	300015008	Manifold	1
22	300012013	Commutator Assembly	1
23	300018056	Piston	1
24	300018059	Piston Spring	1
25	300160007G	Endcover	1
26	N/A	Cannot Order	1
27	300335018	18 Rotor Bolts	4
28	300110051	Shaft	1
29	300339102	Shaft Key	1
30	300018105WHAZ	Brake Kit	1
31	PW72693	Lock Nut	1
32	200016	Wheel Motor Bracket Face Plate **(Face Plate Comes With Frame)**	1

www.mymowerparts.com

For Dixie Chopper Discount Parts Call 606-678-9623 or 606-561-4983

DIXIE CHOPPER

LP-60
HYDRAULIC HOSE DIAGRAM

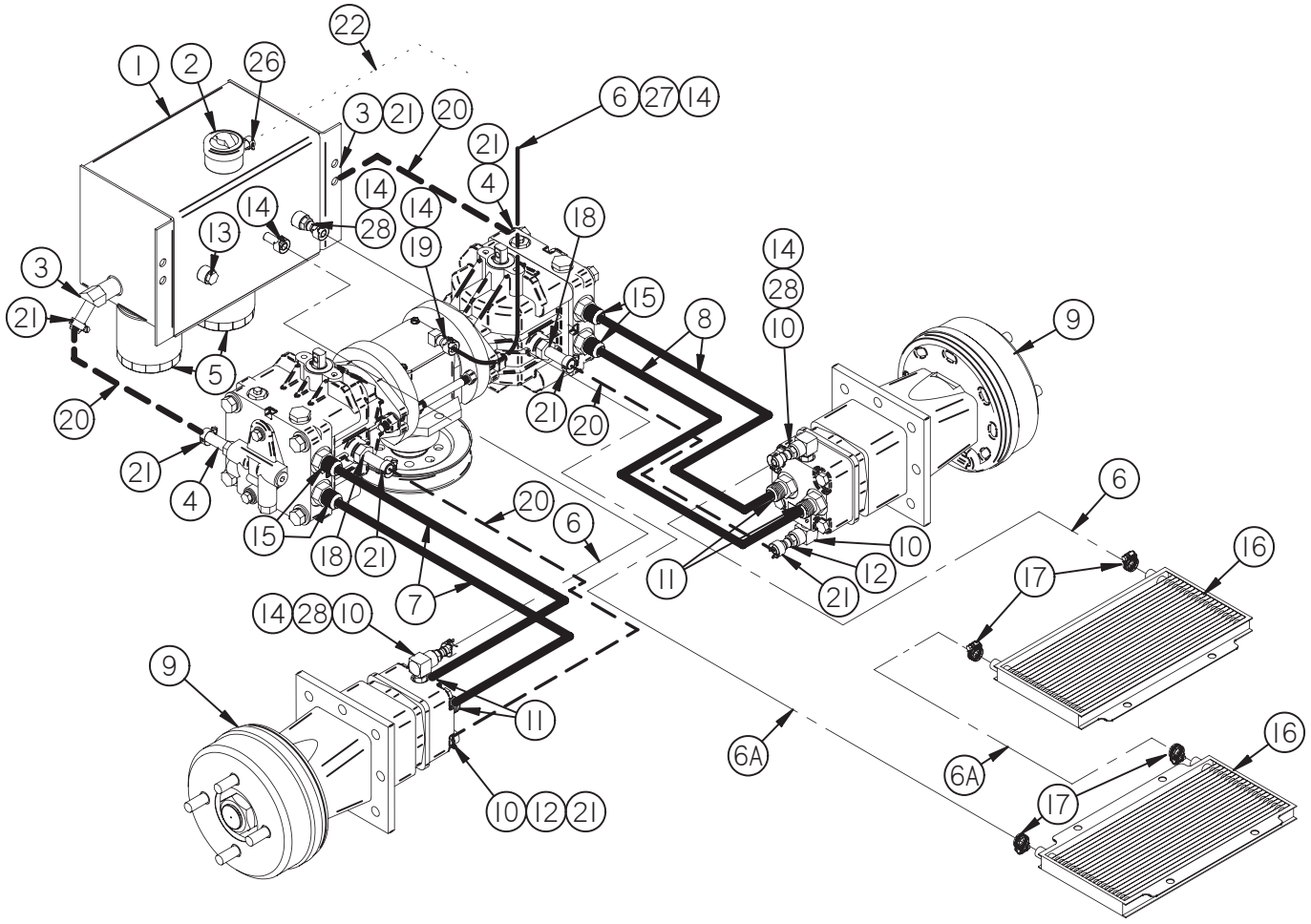

REF	PART#	DESCRIPTION	Qty
1	200008	Hydraulic Tank and Cap	1
2	40117-C	Oil Cap	
3	200048	45° 3/8” MPT - 1/2” Bead Fitting	2
4	200088	3/8” ORB - 1/2” Bead Fitting	2
5	68140	Filter - Hydro Zinga 40 Micron	2
6 6A	65108 60109	3/8” Clear Hose 3/8” Black Hose	/ft. /ft.
7	65073	High Pressure Black Hydro Hose Left	2
8	65074	High Pressure Black Hydro Hose Right	2
9	200018	Wheel Motor - 18 Cubic In. w/brake	2
10	67017	90 - Degree Fitting	4
11	87104	Steel Fitting	4
12	67024	1/4” MPT - 1/2” Barb Fitting	2

REF	PART#	DESCRIPTION	Qty
13	65009	3/8” Pipe Plug	1
14	67013	3/8” Clamps	6
15	65004	High Pressure Port Fitting	4
16	60103-L	Oil Cooler	2
17	68231	#4 Micro Hose Clamp	4
18	200089	1/2” ORB - 1/2” Bead Fitting	2
19	68031	T-Box Fitting (Brass)	1
20	200025	1/2” Black Ribbed Hose (Exterior Braided)	/ft.
21	97098	1/2” Clamp	8
22	97374	5/16” Black Hose	/ft.
25	900018	Optional - Drain Pan for Hydro Filter	
26	72012	5/16” Clamp	1
27	28534	T-Box Plug	1
28	67014	Brass Fitting	3

www.mymowerparts.com

For Dixie Chopper Discount Parts Call 606-678-9623 or 606-561-4983

DIXIE CHOPPER

LP-72
HYDRAULIC HOSE DIAGRAM

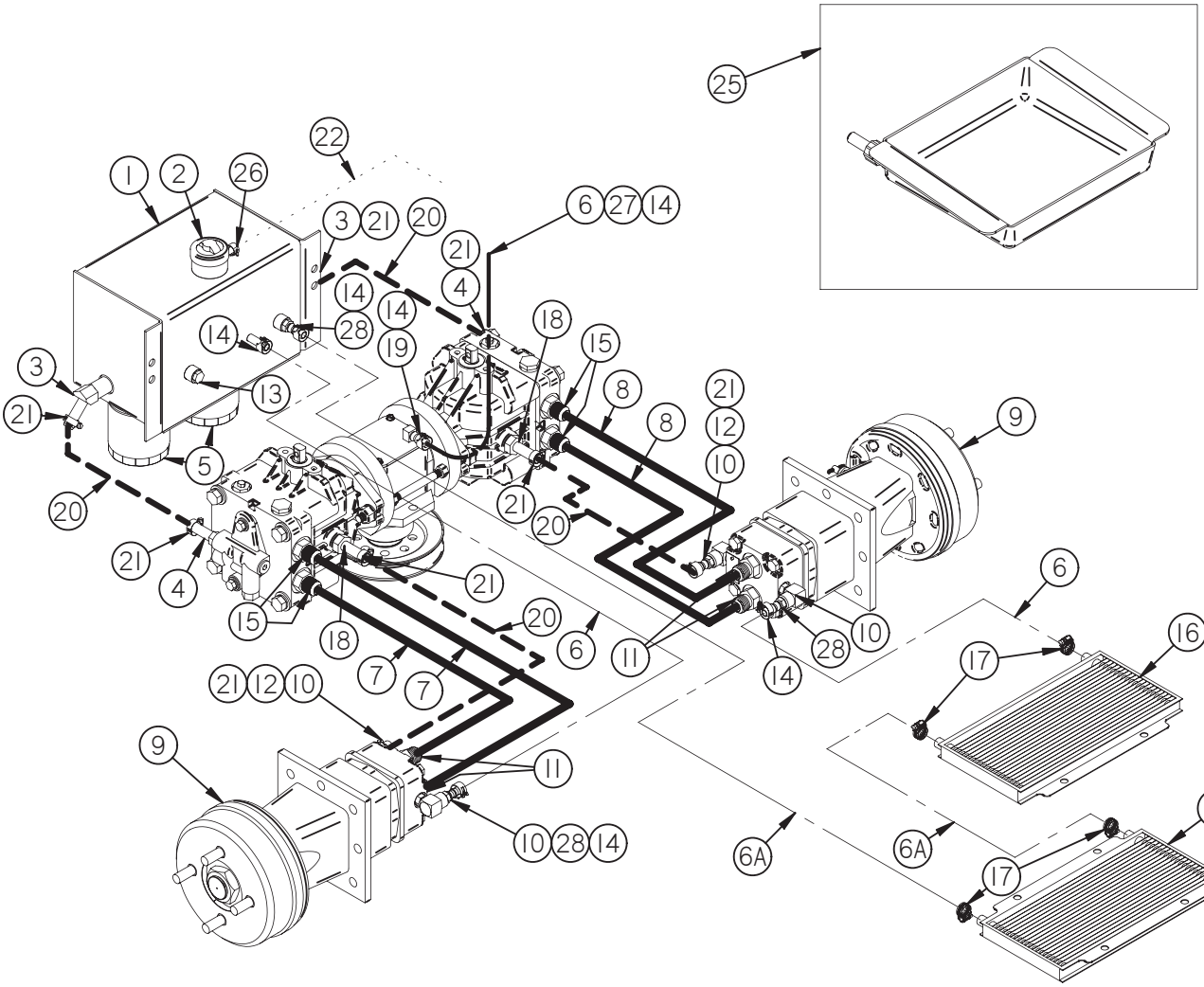

REF	PART#	DESCRIPTION	Qty
1	200008	Hydraulic Tank and Cap	1
2	40117-C	Oil Cap	
3	200048	45° 3/8” MPT - 1/2” Bead Fitting	2
4	200088	3/8” ORB - 1/2” Bead Fitting	2
5	68140	Filter - Hydro Zinga 40 Micron	2
6 6A	65108 60109	3/8” Clear Hose 3/8” Black Hose	/ft. /ft.
7	65073	High Pressure Black Hydro Hose Left	2
8	65074	High Pressure Black Hydro Hose Right	2
9	200018	Wheel Motor - 18 Cubic In. w/brake	2
10	67017	90 - Degree Fitting	4
11	87104	Steel Fitting	4
12	67024	1/4” MPT - 1/2” Barb Fitting	2

REF	PART#	DESCRIPTION	Qty
13	65009	3/8” Pipe Plug	1
14	67013	3/8” Clamps	6
15	65004	High Pressure Port Fitting	4
16	60103-L	Oil Cooler	2
17	68231	#4 Micro Hose Clamp	4
18	200089	1/2” ORB - 1/2” Bead Fitting	2
19	68031	T-Box Fitting (Brass)	1
20	200025	1/2” Black Ribbed Hose (Exterior Braided)	/ft.
21	97098	1/2” Clamp	8
22	97374	5/16” Black Hose	/ft.
25	900018	Optional - Drain Pan for Hydro Filter	
26	72012	5/16” Clamp	1
27	28534	T-Box Plug	1
28	67014	Brass Fitting	3

www.mymowerparts.com

For Dixie Chopper Discount Parts Call 606-678-9623 or 606-561-4983

DIXIE CHOPPER

LP-60/72
FUEL LINE ROUTING DIAGRAM

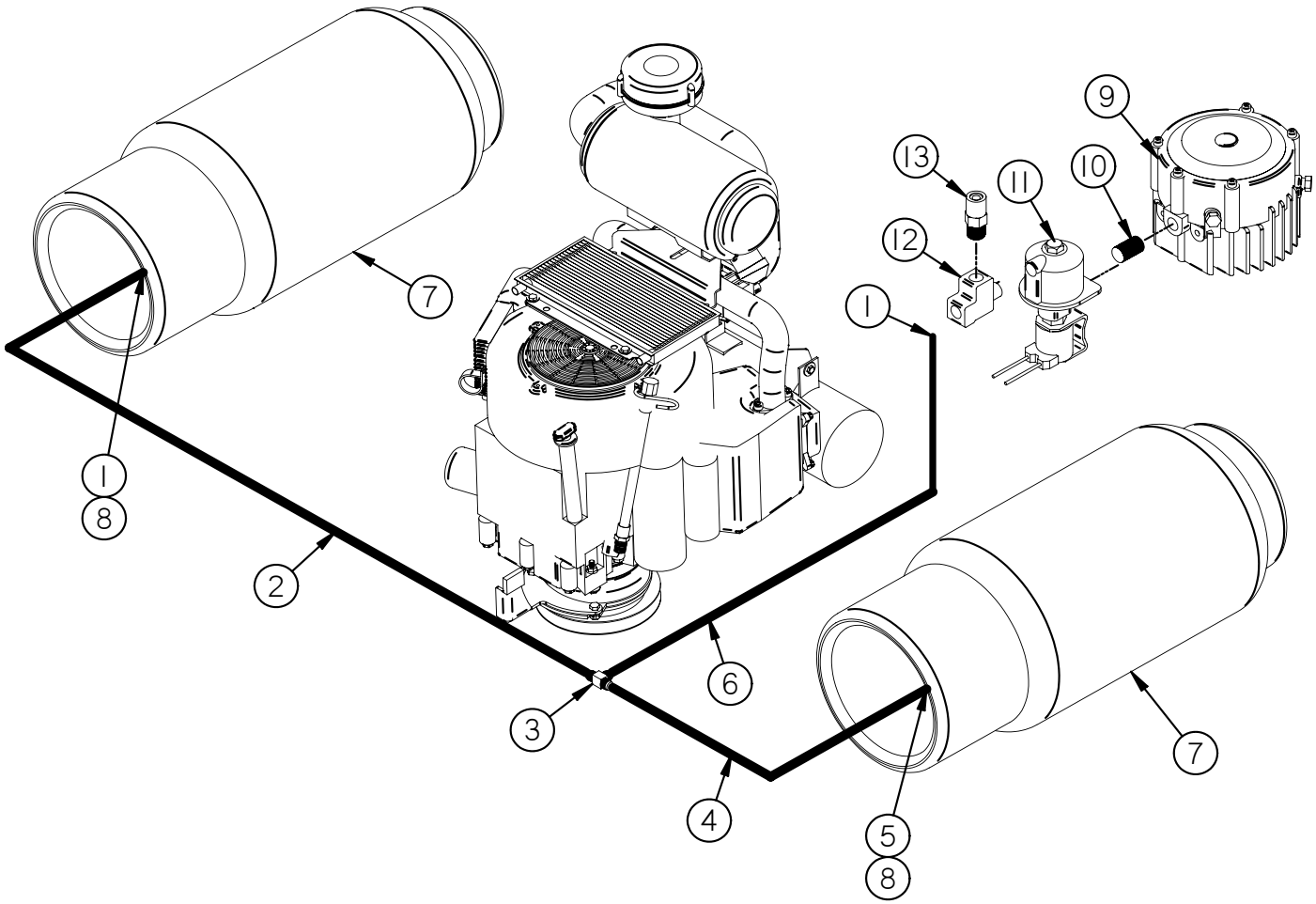

REF	PART#	DESCRIPTION	Qty
	600096	Assembly - Hose Propane	
1	600108	Fitting - Straight	2
2	600116	Assembly - Hose (34-3/4” Long)	1
3	600110	Tee - 5/8”-18 Thread	1
4	600115	Assembly - Hose (29” Long)	1
5	600107	Fitting - Female 90˚	1
6	600114	Assembly - Hose (16-1/2” Long)	1
7	400190	Tank - Propane Aluminum 33#	2
8	600117	Coupler - Straight Fitting	2
9	0F5911	Regulator	1
10	026842	Nipple close 1/4” NPT x .875	1
11	0F5913	Filter/Solenoid	1
12	67022	Fitting - 1/4” Street Tee	1
13	0F5912	Valve - High Pressure Relief	1

www.mymowerparts.com

For Dixie Chopper Discount Parts Call 606-678-9623 or 606-561-4983

DIXIE CHOPPER

LP3000
BODY

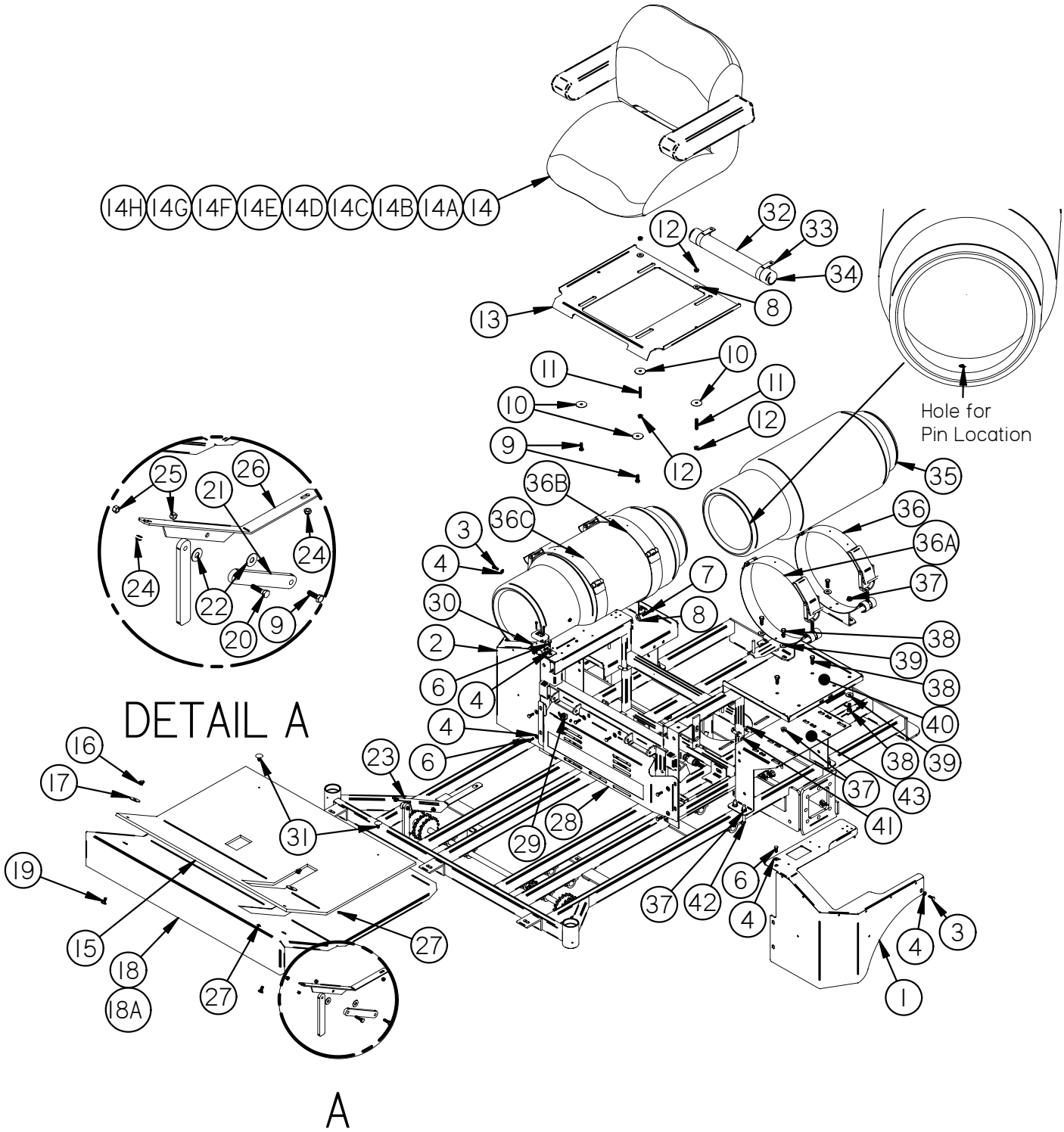

www.mymowerparts.com

For Dixie Chopper Discount Parts Call 606-678-9623 or 606-561-4983

DIXIE CHOPPER

LP3000
BODY

REF	PART#	DESCRIPTION	Qty
1	400193	LH Fender Assembly	1
2	400192	RH Fender Assembly	1
3	B-103	1/4”-20x1/2” Stainless Bolt	2
4	W-153	1/4” Stainless Flat Washer	10
5	N-101	1/4”-20 Stainless Whiz Flange Nut	2
6	B-209	1/4”-20X3/4” Stainless Bolt	8
7	B-105	5/16”-18x1.75” Bolt	2
8	W-113	5/16” Flat Washer	6
9	B-131	5/16”-18x1 Bolt	4
10	W-118	5/16”x1.5” Fender Washer	4
11	S-115	5/16”-18x1.75” Stud	2
12	N-103-W	5/16”-18 Whiz Flange Nut	4
13	400171	Pan - Seat Standard Seat Suspension	1
14	40100-W	Seat (Complete)	1
14A	176801	Armrest Kit (L &R)	
14B	176803	Left Arm	
14C	176802	Right Arm	
14D	176201	Arm Pad (L or R)	
14E	306025	Back Cover	
14F	305839	Cushion Cover	
14G	177827PS	Springs Kit	
14H	400078	Gee- Ride - Seat Cover Back	

REF	PART#	DESCRIPTION	Qty
15	20275	Grey Carpet	1
16	N-106	5/16”-18 Wing Nut	2
17	W-106	3/8” Fender Washer	2
18	68272	Floor Pan **(72”)**	1
18A	67268	Floor Pan **(60”)**	1
19	B-104	5/16”-18x3/4” Carriage Bolt	2
20	B-174	5/16”-18x1 1/4” Bolt	2
21	400007	Connecting Arm	2
22	W-125	3/8” x 7/8” Plastic Washer	4
23	400006	Floor Pan Mounting Bracket (Right)	1
24	N-176	1/4”-20 Nylon Lock Nut	4
25	N-131	5/16”-18 Nylon Lock Nut	4
26	400005	Floor Pan Mounting Bracket (Left)	1
27	B-157	1/4”-20x1/2” Carriage Bolt	4
28	400077	Stainless Steel Front Panel	1
29	20245	Ignition Switch	1
30	400167	Tachometer/Hourmeter Bracket	1
31	C-111	Plastic Cap For Floor Pan	2
32	900016	Docu-Tube (Clear Tube)	1
33	C-109	Tie Strap & Clip	2
34	900017	Cap - Soft Vinyl (Red)	2
35	400190	Aluminum Propane Tank	
36	400198	Propane Cylinder Bracket LR	1
36A	400197	Propane Cylinder Bracket LF	1
36B	400199	Propane Cylinder Bracket RR	1
36C	400196	Propane Cylinder Bracket RF	1
37	N-108	3/8”-16 Whiz Nut	24
38	B-137	3/8”-16 X 3/4” Bolt	12
39	W-104	3/8” Flat Washer	8
40	400194	Tank Bracket Mounting Bracket	2
41	B-206	3/8”-16 Square U-Bolt 1 3/8”W X 2”L	2
42	B-204	3/8”-16 Square U-Bolt 1 3/8”W X 3”L	4
43	400195	Tank Bracket Riser	2

www.mymowerparts.com

For Dixie Chopper Discount Parts Call 606-678-9623 or 606-561-4983

DIXIE CHOPPER

THROTTLE ASSEMBLY

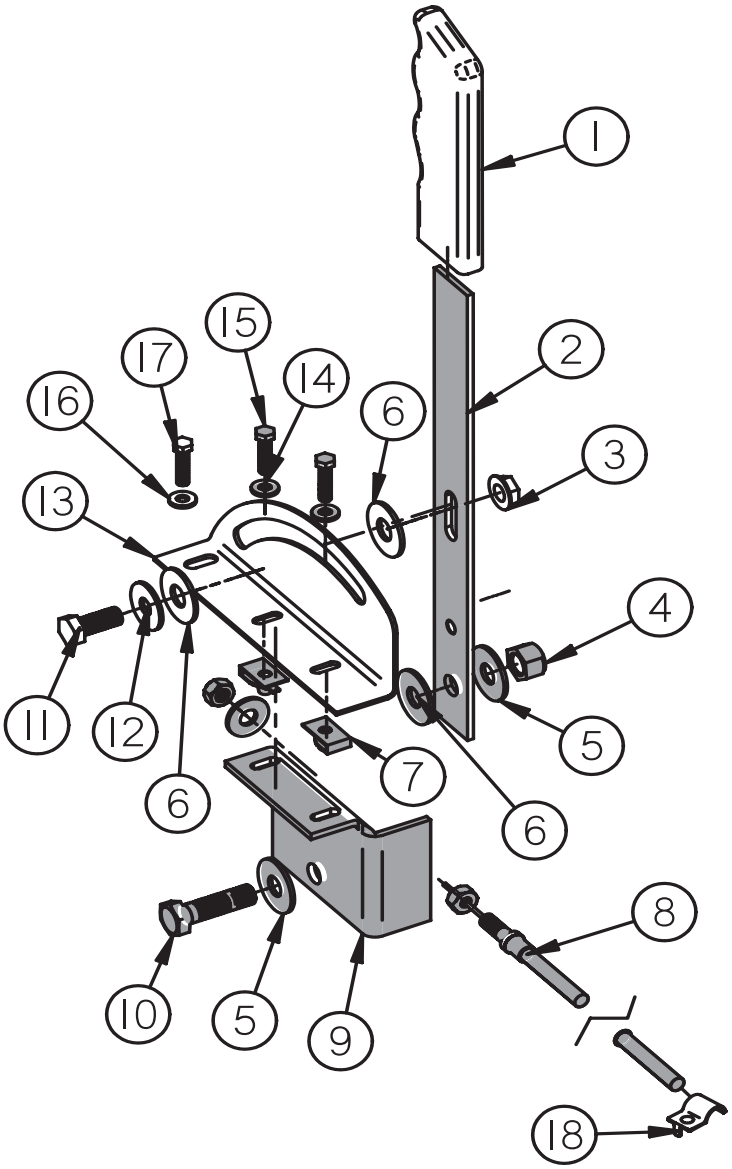

REF	PART#	DESCRIPTION	Qty
	68250	Complete Throttle Assembly F/ Kohler, Guardian 2,5 - 11,15,16	
1	67258	Handle Grip (Black)	1
2	600062	Handle - Throttle f/all Models	1
3	N-134	5/16” Flange Lock Nut	1
4	N-107	3/8” -16 Nyloc Nut	1
5	W-104	3/8” Standard Flat Washer	2
6	W-125	3/8” Nylon Washer	3
7	C-105	Clip Nut	2
8	68249	Throttle Cable Washer Hex Nut	1 2 2

REF	PART#	DESCRIPTION	Qty
9	97011	Lower Throttle Mounting Bracket	1
10	B-108	3/8”-16 x1” Bolt	1
11	B-107	5/16”-18 x 3/4” Bolt	1
12	W-113	5/16” Flat Washer	1
13	65270	Upper Stainless Throttle Bracket	1
14	W-152	#10 Stainless Washer	2
15	B-203	10-24x3/4” Stainless Bolt	2
16	W-153	1/4” Stainless Flat Washer	1
17	B-209	1/4”-20x3/4” Bolt	1
18	C-107	Cable Clamp	2

www.mymowerparts.com

For Dixie Chopper Discount Parts Call 606-678-9623 or 606-561-4983

DIXIE CHOPPER

BRAKE ASSEMBLY

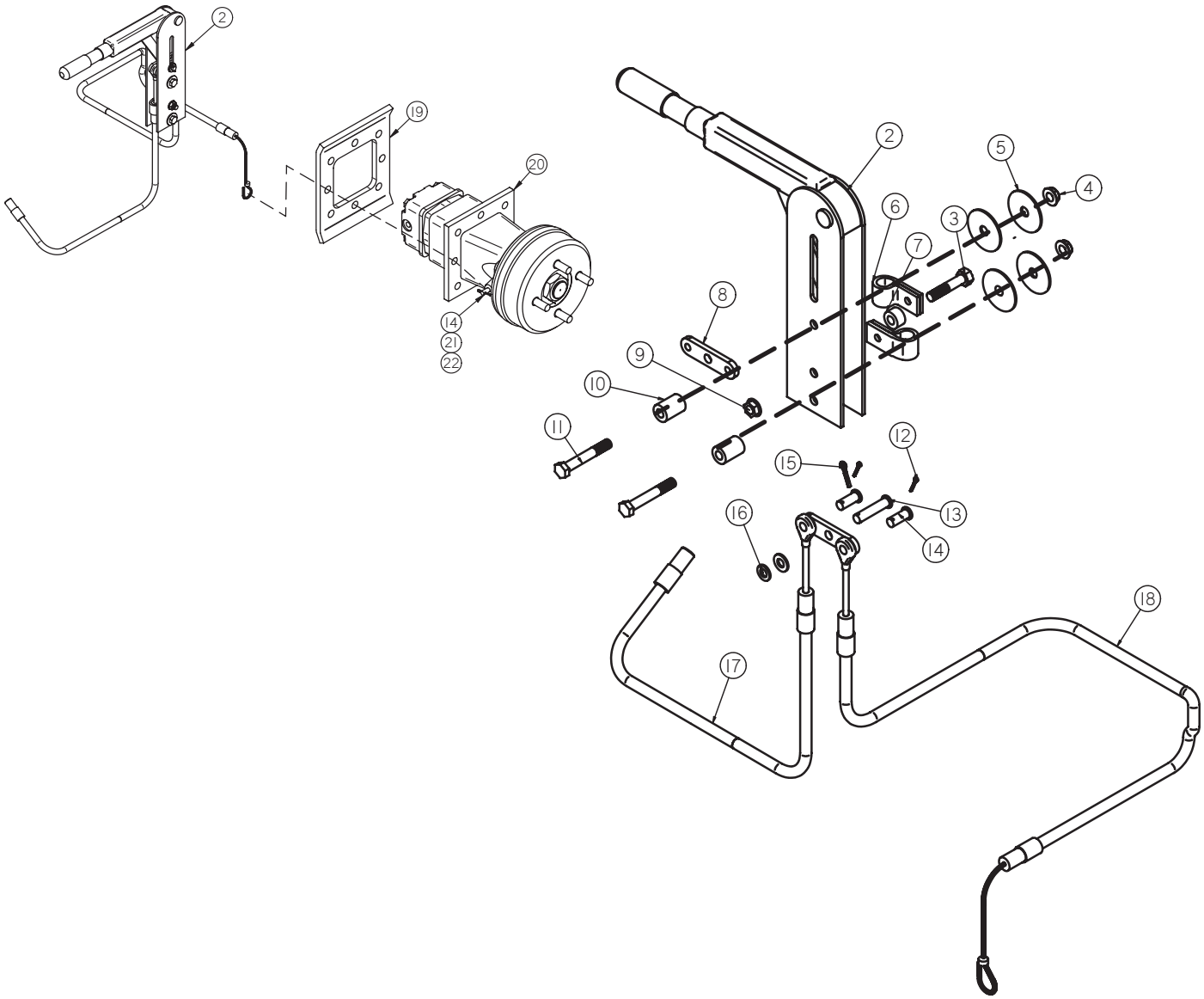

REF	PART#	DESCRIPTION	Qty
1		Complete Brake	
2	400229	Brake Handle Assembly (Inc. #2-#18)	1
3		Bolt	1
4	N-134	5/16”-18 Large Flange Nut	2
5	W-106	3/8” Fender Washer	4
6	65061	R Clamp	2
7	65063	Spacer	1
8	65060	Pivot Plate	2
9		Nut	1
10	65062	Spacer	2
11	B-156	5/16”-18 X 2” Cr. 5 Bolt	2
12		Hairpin Cotter	2

REF	PART#	DESCRIPTION	Qty
13	P-129	5/16” X 1 1/2” Clevis Pin	1
14	P-112	5/16” X 3/4” Clevis Pin	2
15		Hairpin Cotter	1
16	W-102	1/4” Flat Washer	2
17	400231	Right Brake Cable (Long)	1
18	400230	Left Brake Cable (Short)	1
19	200016	Wheel Motor Face Plate	
20	200018	18 Cu. In. Wheel Motor w/Brake	
21	W-102	1/4” Flat Washer	
22	P-117	1/8” X 2” Cotter Pin	

www.mymowerparts.com

For Dixie Chopper Discount Parts Call 606-678-9623 or 606-561-4983

DIXIE CHOPPER

LP3000
ENGINE - 30Hp GENERAC

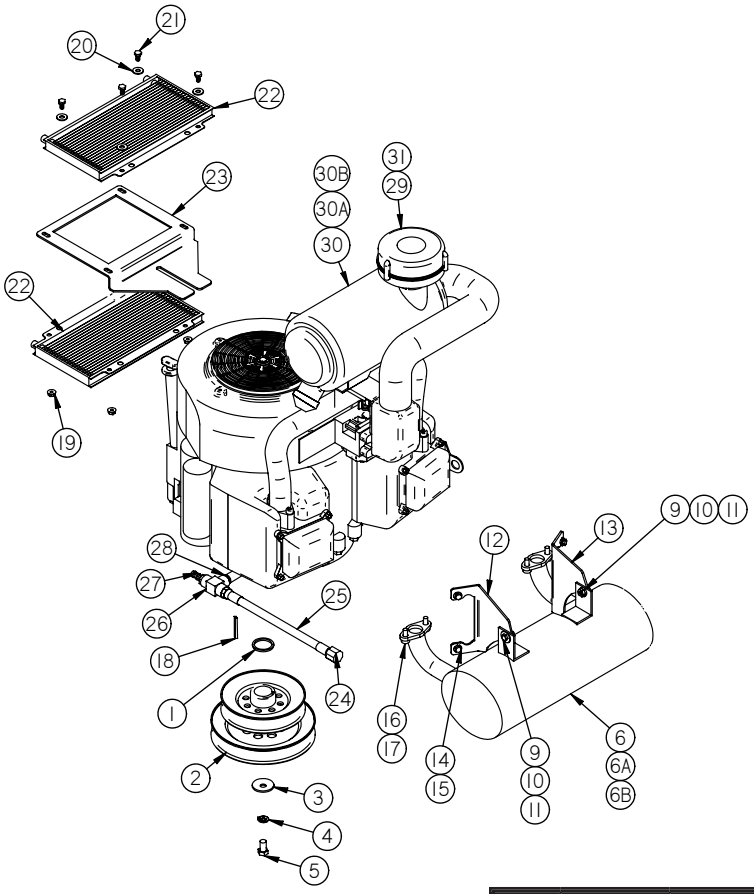

REF	PART#	DESCRIPTION	Qty
	600093	30Hp LP Generac Engine Spec.#05179-0	
1	W-178	1-1/4" ID. X 1 7/8" OD. X 1/8" Thick Washer	1
2	600033	Pulley - 5x6x1 1/4" Engine	1
3	W-144	7/16" Stainless Belleville Washer	1
4	W-108	7/16" Lock Washer	1
5	B-114	7/16"-20x3/4" Bolt	1
6 6A	600061 600032	Kit - Generac Muffler **(Incl. Ref. # 7-8)** Muffler - Generac **(Only)**	1
6B	OC4138	Gasket - Generac Muffler	2
7	600059	Tailpipe - Generac Muffler **(Optional)**	
8	600060	Clamp - Generac Muffler Tailpipe **(Optional)**	
9	B-107	5/16"-18x3/4" Bolt	2
10	W-113	5/16" Flat Washer	2
11	N-103-W	5/16"-18 Whiz Flange Nut	2
12	600057	Bracket - LH Muffler	1
13	600058	Bracket - RH Muffler	1
14	W-179	M6 Lock Washer	4

REF	PART#	DESCRIPTION	Qty
15	B-269	M6-16x1.00 Bolt	4
16	045761A	Stud - M8 - 1.25 x 10MM	4
17	052858	Nut - Lock Flange M8 - 1.25	4
18	K-100	1/4" Key	1
19	N-102	1/4"-20 Whiz Flange Nut	4
20	W-102	1/4" Washer	4
21	B-101	1/4"-20x1/2" Bolt	4
22	60103-L	Oil Cooler	2
23	400105	Bracket - Oil Cooler Generac	1
24	600103	3/8" Steel Pipe Cap	1
25	600102	Oil Drain Hose Assembly	1
26	60102	3/8" Black Pipe Tee	1
27	87113	3/8" Male Pipe 3/8" Barb - Straight	1
28	72230	3/8" Black Pipe Nipple 3" Long	1
29	90115	Turbo Precleaner	1
30 30A 30B	0E3655 0E3557 0E3656	Canister - Donaldson Air Cleaner Primary Element Donaldson Air Cleaner Secondary Element Donaldson Air Cleaner	
31	90125	Clamp	1

www.mymowerparts.com

For Dixie Chopper Discount Parts Call 606-678-9623 or 606-561-4983

DIXIE CHOPPER

LP3000
GENERAC ENGINE OIL ROUTING

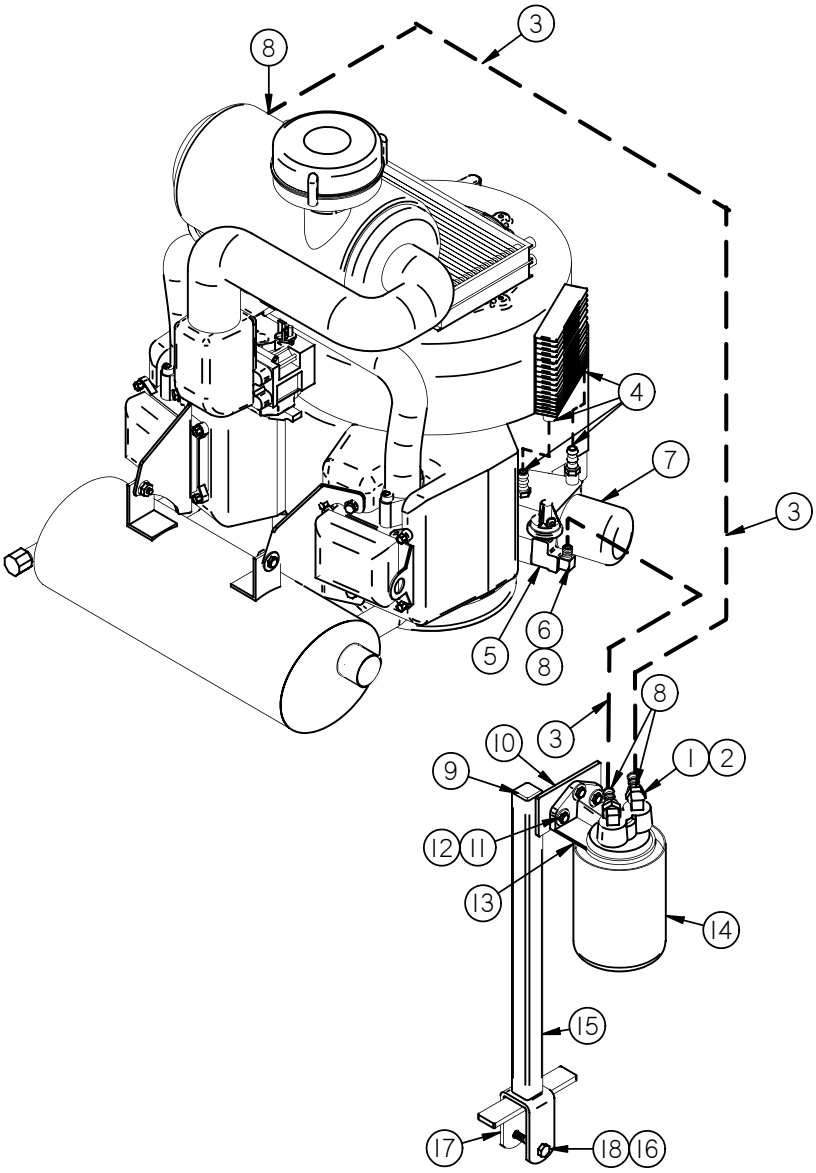

REF	PART#	DESCRIPTION	Qty
1	60113	1/8” x 3/8” 90Deg. Fitting	2
2	60116	3/8” Swivel to 3/8” Barb	2
3	60109	3/8” Line	/ft.
4	68231	#4 Worm Clamps	4
5	67022	1/4” Street Tee	1
6	67019	Hose Barb Brass	1
7	070185B	Oil Filter	
8	67013	Green Clamps	4
9	68142	Plastic Plug 1x1	1
10	N-102	1/4”-20 Whiz Flange Nut	3
11	B-172	1/4”-20x1” Bolt	3

REF	PART#	DESCRIPTION	Qty
12	W-102	1/4” Flat Washer	3
13	60122	Amsoil Filter Head	1
14	60119	Amsoil Filter	1
15	100173	Amsoil Filter Mount	1
16	B-165	3/8”-16x2” Bolt	1
17	N-107	3/8”-16 Nyloc Nut	1
18	W-104	3/8” Standard Flat Washer	1

www.mymowerparts.com

For Dixie Chopper Discount Parts Call 606-678-9623 or 606-561-4983

DIXIE CHOPPER

30Hp
GENERAC ELECTRICAL DIAGRAM

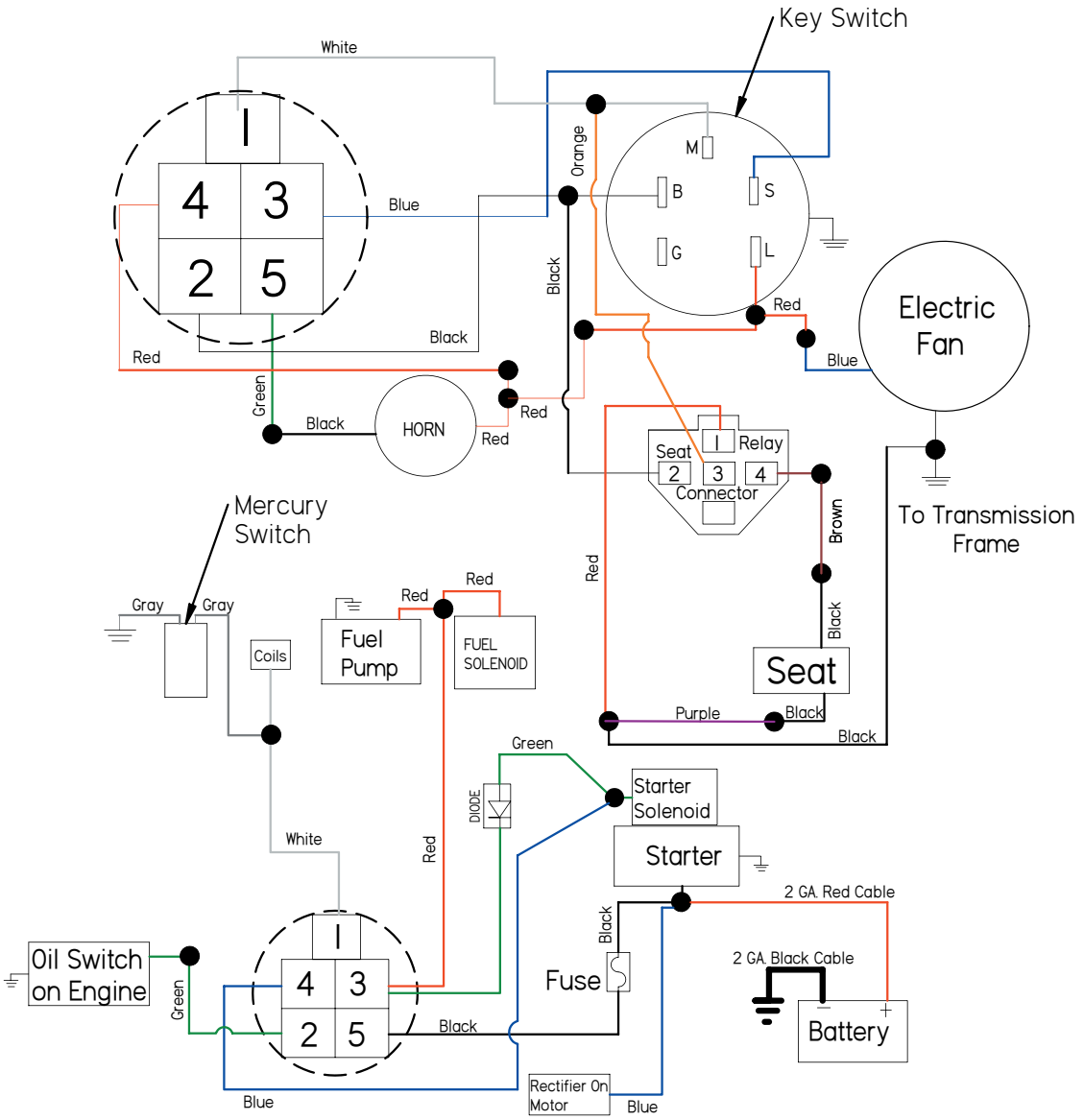

PART#	DESCRIPTION	Qty
500004	Generac Wiring Harness	1
20245	Ignition Switch	1
500037	Hour Meter/Tach	1
400167	Tach Bracket	1
N/A	Battery	1
97145	Battery Tray	1
20228	Battery Strap	1
97323	Battery 2Ga. Cable Positive 80”	1
97322	Battery Cable Ground 12”	1

PART#	DESCRIPTION	Qty
97327	Battery Boot	1
40229	Mercury Switch	1
C-112	Clamp for Mercury Switch	1
65510	Seat Relay	1
65509	Fuse	
20254	Fuse Holder	
60117 C-113	Low Oil Horn Horn Clamp	1 1
200043	Electrical Fan	1
900073	Spiral Loom	/ft.

www.mymowerparts.com

For Dixie Chopper Discount Parts Call 606-678-9623 or 606-561-4983

DIXIE CHOPPER®

LP300060 / LP300072 GENERAL SAFETY

[IN REFERENCE TO: OPERATIONAL MANUAL #700092,AUGUST 2006]

HANDLE LP WITH CARE— A SAFE BUT HIGHLY FLAMMABLE FUEL.

--ALWAYS CLOSE VALVES ON CYLINDERS WHEN NOT IN USE.

--USE ONLY D.O.T. APPROVED 35 LB. CYLINDERS THAT MEET ASME & ITA STANDARDS.

--USE ONLY LP FUEL.

--NEVER REMOVE AN LP CYLINDER WHILE MOWER IS RUNNING.

--NEVER FILL AN LP CYLINDER WHILE: SMOKING, NEAR AN OPEN FLAME, WITHIN 25 FEET OF AN ELECTRICAL TOOL, OR WITHIN 15 FEET OF A RUNNING INTERNAL COMBUSTION ENGINE.

--FILL CYLINDERS ONLY IN A WELL VENTILLATED AREA.

--NEVER INTENTIONALLY OVERFILL AN LP CYLINDER. [VIOLATION OF STATE AND FEDERAL LAW]

--INSPECT LP CYLINDER VISUALLY WHEN FILLING: MEETS CODE, RELIEFE VALVE IS CLEAN AND FREE FROM OBSTRUCTIONS AND CAP IS IN PLACE. THERE IS AN ABSCENCE OF: DENTS, GOUGES, CORROSION, BULGING/PROTRUSIONS, OR PITTING OF THE CYLINDER SURFACE, AND THAT THERE IS NO DAMAGE TO THE CYLINDERS FOOT [BASE] ALL OF WHICH WILL DEMINISH THE SAFETY OF THE CYLINDER.

--INSPECT AND GET D.O.T. CERTIFICATION OF THE CYLINDER EVERY 12 YEARS AFTER THE MANUFACTURED DATE ON THE CYLINDER PER CODE #49 OF THE FEDERAL REGULATIONS #173.34.

--DISCARD ANY LP CYLINDER IF: ALL OR PART OF THE ORIGINAL INFORMATION STAMPED ON THE CYLINDER ARE NOT LEGIBLE.

11/29/05

www.mymowerparts.com

For Dixie Chopper Discount Parts Call 606-678-9623 or 606-561-4983

DIXIE CHOPPER

The World's Fastest Lawn Mower

6302 E. County Road 100 North
Coatesville, IN. 46121
Phone 1-765-CHOPPER
www.dixiechopper.com

Dixie Chopper, Magic Circle, and the Magic Circle Atom Logo are all trademarks of Magic Circle Corporation and may not be reproduced without permission.

Printed In USA
Specifications and instructions subject to change without notice.
Print Date 10/06

www.mymowerparts.com