For Dixie Chopper Discount Parts Call 606-678-9623 or 606-561-4983

DIXIE CHOPPER

The World's Fastest Lawn Mower

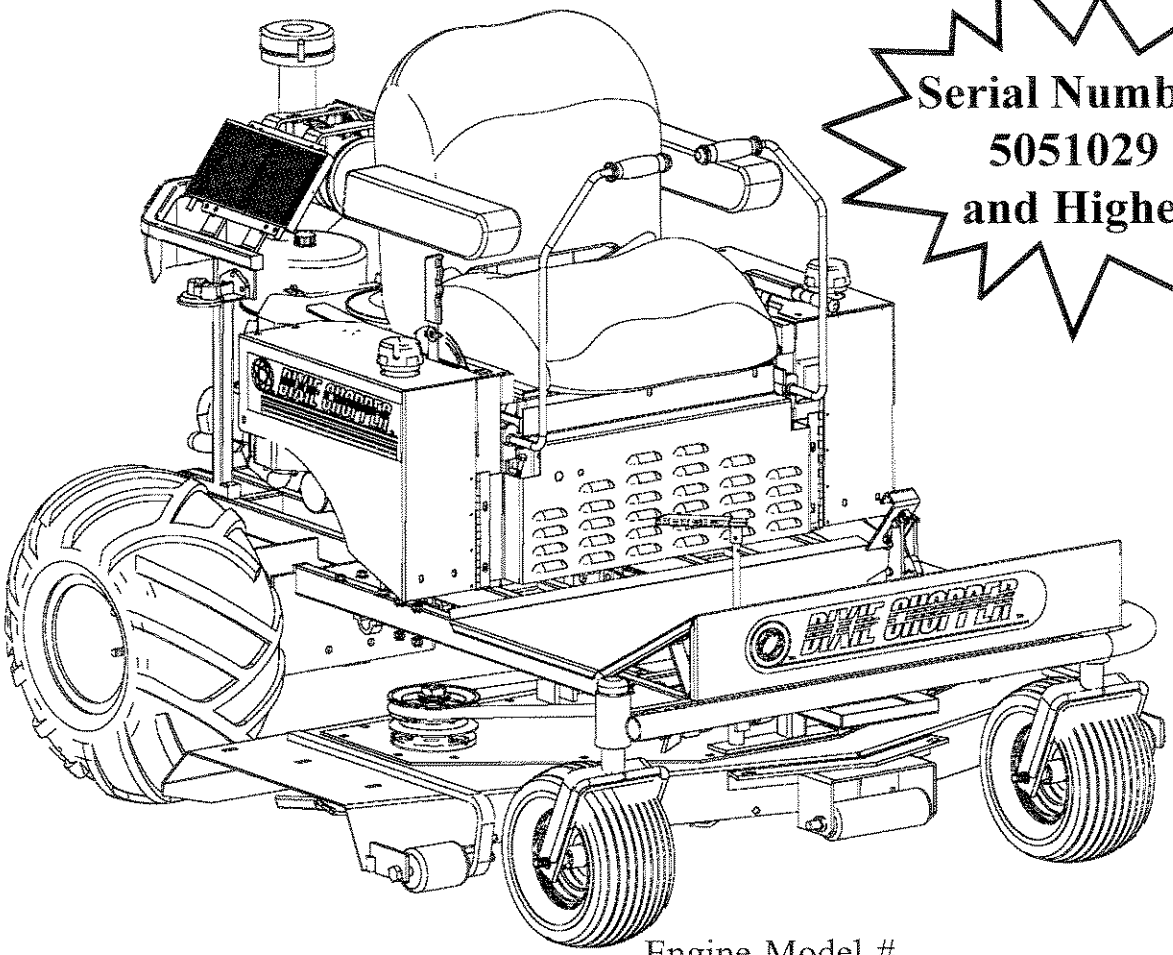

Model # _____ Engine Model # _____

Serial # _____ Engine Serial # _____

Date Purchased _____ Engine Spec. # _____

2005 X,XW,SP,XT-60 PARTS MANUAL
REV. 2

700035-2 January, 2005

www.mymowerparts.com

For Dixie Chopper Discount Parts Call 606-678-9623 or 606-561-4983

DIXIE CHOPPER

Congratulations on your purchase of a **DIXIE CHOPPER** lawn mower. We believe you have exercised excellent judgement, and are most appreciative of your patronage.

Your DIXIE CHOPPER Dealer is your *#1 SOURCE* for DIXIE CHOPPER parts and service !

Please call or visit your nearest authorized Dixie Chopper Dealer for additional service information.

AUTHORIZED DEALER

Let us know how you are getting along with your new CHOPPER!

www.dixiechopper.com

Dixie Chopper reserves the right to make changes or add improvements to its products at any time without incurring any obligation to make such changes to products previously manufactured. Neither Dixie Chopper, nor its dealers, accept responsiblility for variations which may be evident in the actual specifications of its products and the statements and descriptions contained in this publication.

www.mymowerparts.com

For Dixie Chopper Discount Parts Call 606-678-9623 or 606-561-4983

DIXIE CHOPPER

CONTENTS

Quick Reference Parts	1
Decals	3
Decal Placement	6
Frame	7
Wheels & Tires	10
Foot Pedal	11
Deck Lift System	12
Deck	13
OCDC	15
Hubs & Belts	16
Transmission Frame	17
Transmission & Drive	20
Wheel Motor	22
Hydraulic Hose Diagram	24
Body	27
Throttle	31
Fuel System	32
Brake Assembly	34
Engine - Kohler 25Hp	35
Engine - Kohler 27Hp & 28Hp	36
Kohler 27Hp & 28Hp Engine Oil Routing	37
Engine - 27Hp & 32Hp Guardian	38
Guardian 32Hp Engine Oil Routing	39
Electrical Diagram - Kohler	40
Electrical Diagram - Kohler EFI	41
Electrical Diagram - Generac	42
Notes	43

www.mymowerparts.com

For Dixie Chopper Discount Parts Call 606-678-9623 or 606-561-4983

DIXIE CHOPPER

X,XG MODEL
QUICK REFERENCE PARTS

MODEL	X2503	XG2703
Engine	Kohler 25Hp	Guardian 27 Hp
Deck	60"	60"
Left Rear Tire/Rim Assembly Boss IV	400155	400155
Right Rear Tire/Rim Assembly Boss IV	400154	40154
Rear Tires	400153	400153
Rear Rims	400118	400118
Front Tire & Rim (Run Flat)	400130	400130

Belts		
Engine-Transmission	9907B41	9907B41
Engine-Deck	9907B85	9907B85
Deck	9907B130	9907B130

Filters		
Fuel Filter	97392	0F0106
Kohler Air Filter		
Kohler Foam Filter		
Nelson Air Filter Primary	25-083-01	
Nelson Air Filter Secondary	25-083-04	
Donaldson Air Filter (Primary)		0E3557
Donaldson Air Filter (Secondary)		0E3656
Amsoil Oil Filter		
Zinga-Hydro Filter (2)	68140	68140

Blades		
X Style (Standard)	30227-60X	30227-60X
Narrow High Lift Blade	30227-60H	30227-60H
Heavy-Duty	30227-60N	30227-60N

www.mymowerparts.com

For Dixie Chopper Discount Parts Call 606-678-9623 or 606-561-4983

DIXIE CHOPPER
XWF, XT, SP
QUICK REFERENCE PARTS

MODEL	XWF2700	SP2800EFI	XT3200
Engine	Kohler 27Hp	Kohler 28Hp	Guardian 32Hp
Deck	60"	60"	60"
Rear Tires	97200	97200	97200
Rear Rims	400014	400014	400014
Front Tire & Rim (Run Flat)	400130	400129	400129

Belts			
Engine-Transmission	9907B41	9907B41	9907B41
Engine-Deck	9907B85	9907B85	9907B85
Deck	9907B130	9907B130	9907B130

Filters			
Fuel Filter	97392	97392	0F0106
Nelson Air Filter Primary	25-083-01	25-083-01	
Nelson Air Filter Secondary	25-083-04	25-083-04	
Donaldson Air Filter (Primary)			0E3557
Donaldson Air Filter (Secondary)			0E3656
Amsoil Oil Filter	60119	60119	60119
Zinga-Hydro Filter (2)	68140	68140	68140

Blades			
X Style (Standard)	30227-60X	30227-60X	30227-60X
Standard	30227-60H	30227-60H	30227-60H
Heavy-Duty	30227-60N	30227-60N	30227-60N

Various Parts SOME MODELS		
Fiber Washer	W-101	
Spindle Bearing	30218	
Deck Roller (Ctr)	30240-O	
Choke Control	20248	
Throttle Cable	68249	
Brake Cable	65246 (Left)	65247 (Right)
Parking Brake Band	65244	
Fuel Cap	600035	
Control Lever Grip	20257	

www.mymowerparts.com

For Dixie Chopper Discount Parts Call 606-678-9623 or 606-561-4983

DIXIE CHOPPER
DECALS

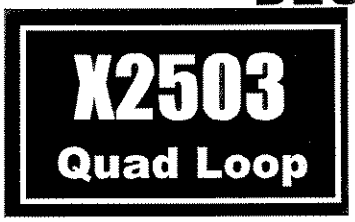

1

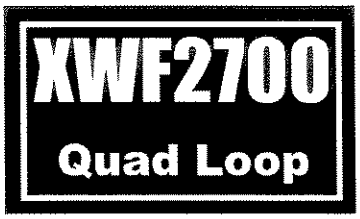

2

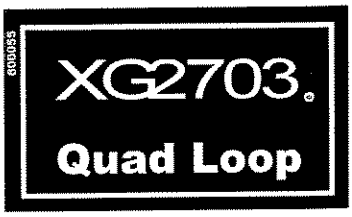

3

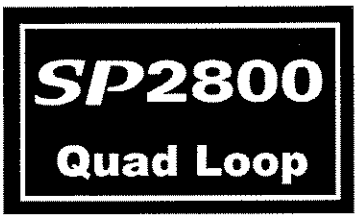

4

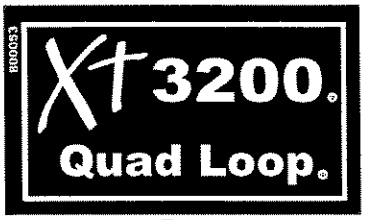

5

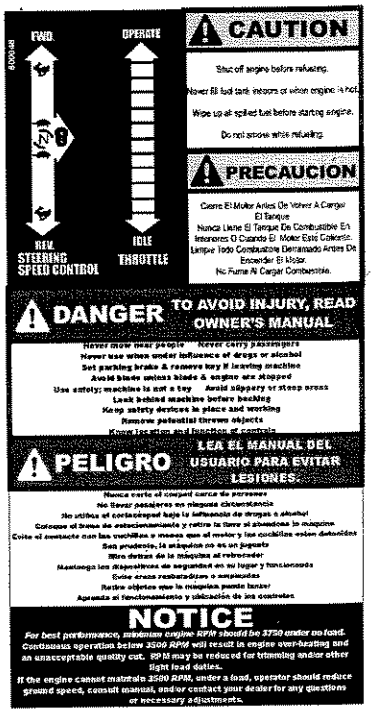

10

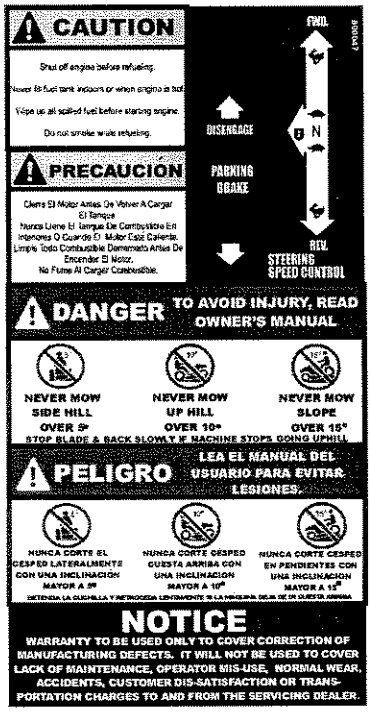

11

6

7

8

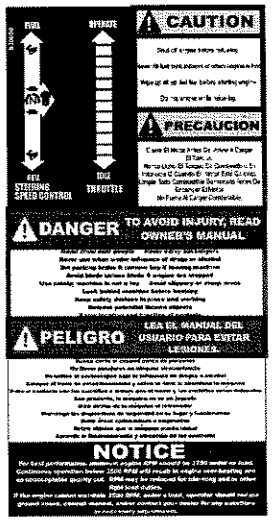

12

9

13

REF #	PART #	DESCRIPTION	QTY.
1	97068	X2503 Front Panel	1
2	800031	XWF2700 Front Panel	1
3	800055	XG2703 Front Panel	1
4	800044	SP2800 Front Panel	1
5	800053	XT3200 Front Panel	1
6	65413	Patent Pending (T-Box)	1

REF #	PART #	DESCRIPTION	QTY.
7	800014	Ignition	1
8	800015	Choke	1
9	97514	Horn Warning	1
10	800048	Decal - Right Fender	1
11	800047	Decal - Left Fender	1
12	800050	Decal - Right Fender Combo F/Cooler	1
13	800060	Lucas Deck Hub Decal	1

www.mymowerparts.com

For Dixie Chopper Discount Parts Call 606-678-9623 or 606-561-4983

DIXIE CHOPPER
DECALS (CONT'D)

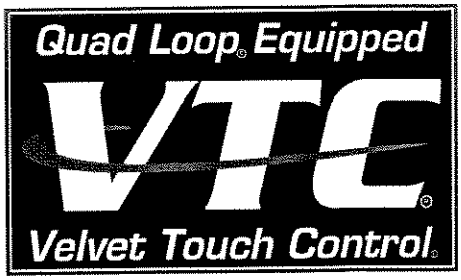

14

15

16

18

MODEL	ENG-TRANS	ENG-DECK	DECK SPINDLE	CLUTCH-DRIVE
42"	B-41	B-81	A-89	
50"	B-41	B-84	B-112	
60"	B-41	B-85	B-130	
MEMORIAL 60"	B-41	B-85	B-130	
MEMORIAL 72"	B-41	B-85	B-162	
CITY	B-41	B-81	B-162	
TWIN	B-40	B-82	B-162	B-38

800042
19

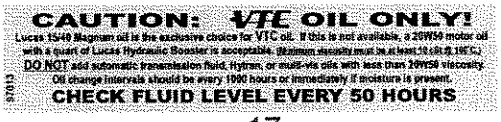

17

20

21

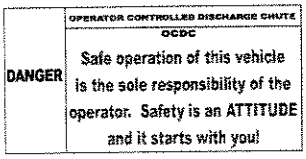

22

23

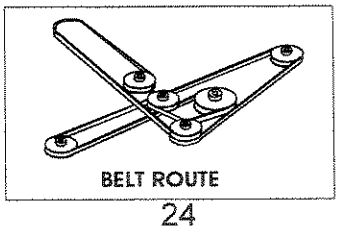

24

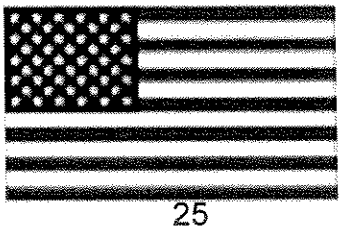
25

28

26

27

29

REF #	PART #	DESCRIPTION	QTY.
14	264000200210	VTC	1
15	30590	USA Decal (Rear Right Fender)	1
16	30229	Deck Danger Decal	2
17	97013	VTC Only (Oil Tank)	1
18	65409	60 Inch Cut	2
19	800042	Belt Information	1
20	800018	Docu-Tube Decal	1
21	800008	Hp + 1 Decal	1

REF #	PART #	DESCRIPTION	QTY.
22	97072	OCDC Safety Decal	1
23	800017	Big Wheel Flatlander Decal	1
24	65422	Belt Route Decal	1
25	800020	American Flag (Side Left Fender)	1
26	800019	Roll & Seal Decal	1
27	800022	Xtreme Mowchine	1
28	800043	Throttle Start Decal F/XT3200	1
29	800061	Lucas Oil Decal (Rear Left Fender)	1

www.mymowerparts.com

For Dixie Chopper Discount Parts Call 606-678-9623 or 606-561-4983

DIXIE CHOPPER
DECALS (CONT'D)

30

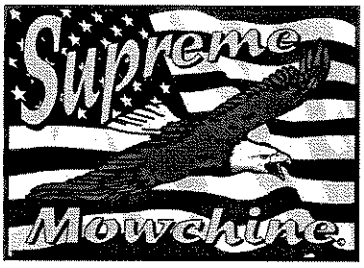

32

33

34

31

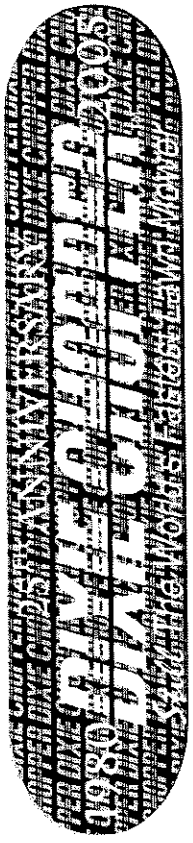

35

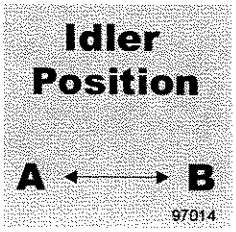

36

REF #	PART #	DESCRIPTION	QTY.
30	800033	Floor Pan Decal	1
31	800032	Fender Decal	2
32	800046	Supreme Mowchine Decal	2
33	97008	Cross Member Decal	1
34	800059	Dixie Power - Torque Decal (XG2703, XT3200 Only)	1
35	800079	25th Anniversary Decal (Floor Pan Decal)	1
36	97014	Idler Position Decal (Triangle Plate on Deck)	1

www.mymowerparts.com

For Dixie Chopper Discount Parts Call 606-678-9623 or 606-561-4983

DIXIE CHOPPER

DECAL PLACEMENT

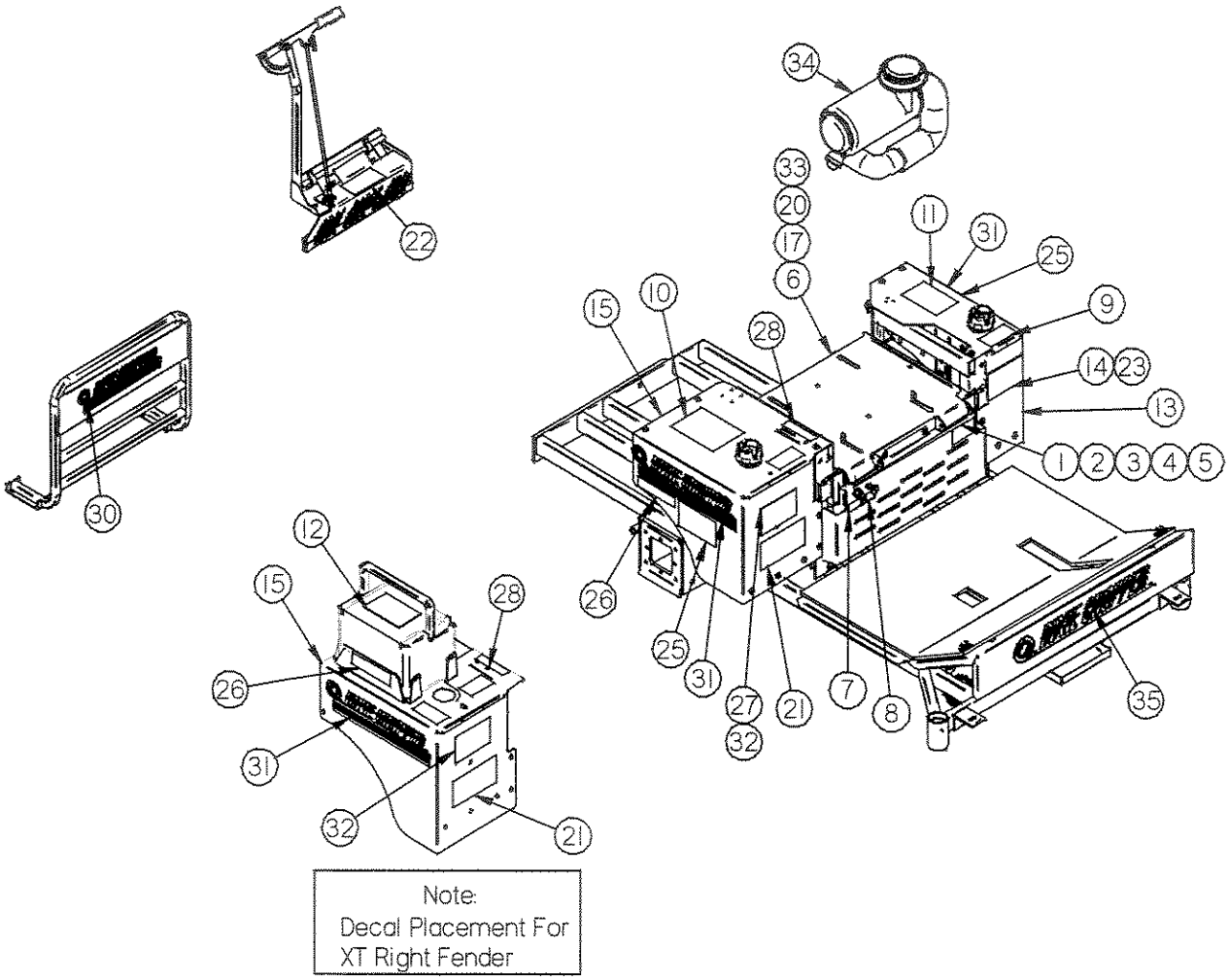

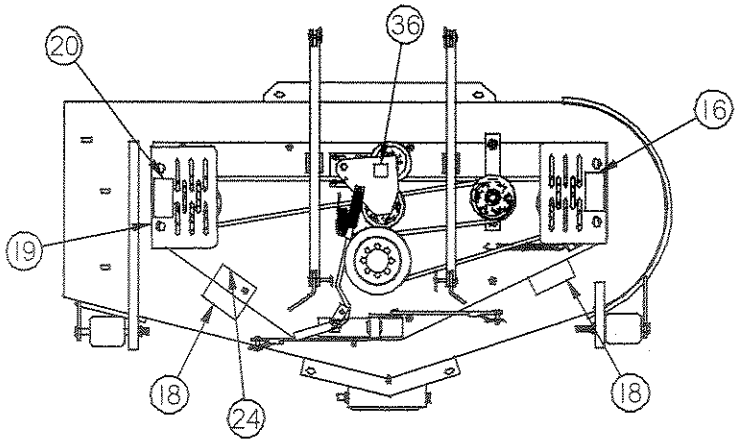

www.mymowerparts.com

For Dixie Chopper Discount Parts Call 606-678-9623 or 606-561-4983

DIXIE CHOPPER
X2503, XG2703
FRAME

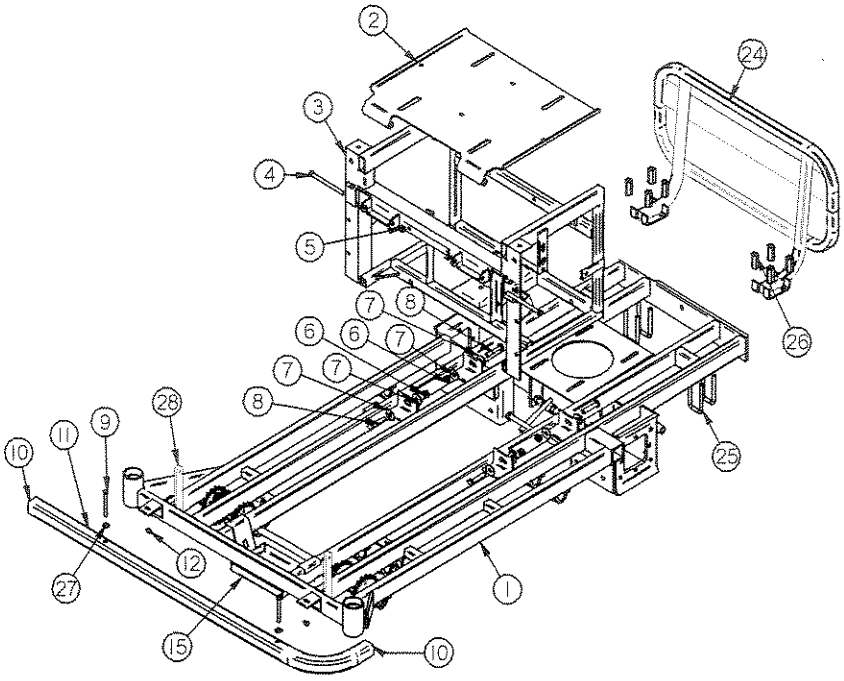

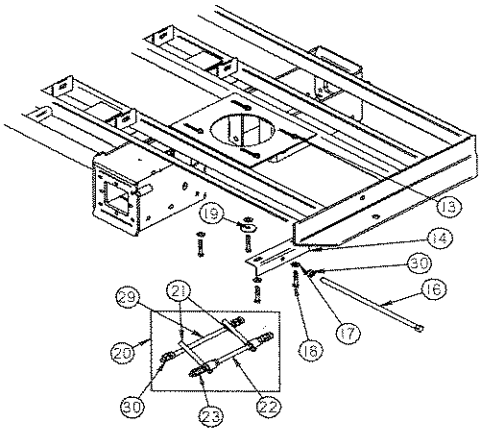

REF #	PART #	DESCRIPTION	QTY.
1	100025	Weldment - 50/60 Frame	1
2	400026	Weldment - Low Ride Seat Pan w/ Hinge	1
3	100007	Weldment - Low Ride Transmission Frame	1
4	B-229	3/8"-16 x 5" Bolt	2
5	N-107	3/8"-16 Nyloc Nut	2
6	N-135	7/16"-20 Nyloc Nut	4
7	W-168	7/16" Hardened Flat Washer	8
8	B-199	7/16"-20 x 2" Bolt	4
9	B-179	3/8"-16x2 1/2" Bolt	2
10	97169	Plastic Cap	2
11	10100-ST 67045-60S	Bumper - Square Bumper - 60" Solid (Optional)	1
12	N-108	3/8"-16 Whiz Flange Nut	2
13	N-103-W	5/16"-18 Whiz Flange Nut	4
14	72216	Pull Stop Weldment	1

REF #	PART #	DESCRIPTION	QTY.
15	400065 B-190 N-108	Tray - Standard Battery Box 3/8"-16x1 1/2" Carriage Bolt 3/8"-16 Whiz Flange Nut	1 2 2
16	B-280	1/2"-13x14" Engine Adjustment Bolt	1
17	W-113	5/16" Standard Flat Washer	4
18	B-156	5/16"-18x2" Bolt	4
19	W-107	Shark-Tooth Belleville Washer	1
20	72220	Belt Guide Assembly **(Include 21,22,23)**	
21	72217	Belt Guide Weldment	2
22	72222	1/2"-13x12 1/2" All Thread	1
23	N-110	1/2"-13 Nut	6
24	400074	Kohler Crash Guard	1
25	B-204	3/8"-16 U-Bolt	4
26	N-160	3/8"-16 Coupling Nut	8
27	W-160	10MM Flat Washer	2
28	400008	Mount - Floor Pan Hinge Frame	2
29	72222	1/2"-13x12 1/2" All Thread	1
30	N-110	1/2"-13 Nut	7

www.mymowerparts.com

For Dixie Chopper Discount Parts Call 606-678-9623 or 606-561-4983

DIXIE CHOPPER
XWF2700, SP2800EFI
FRAME

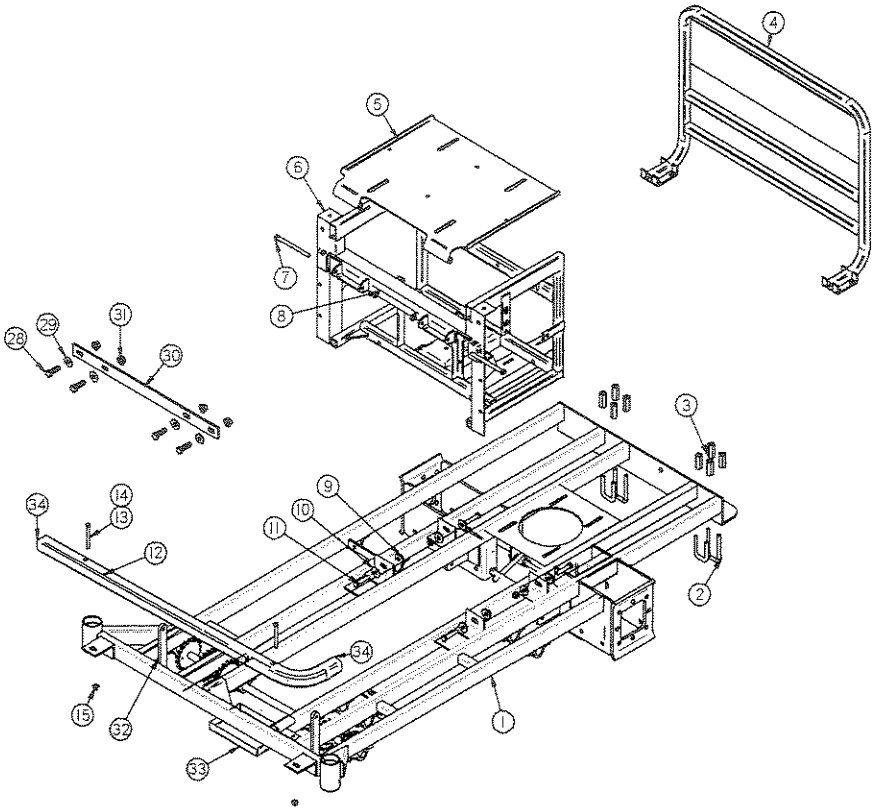

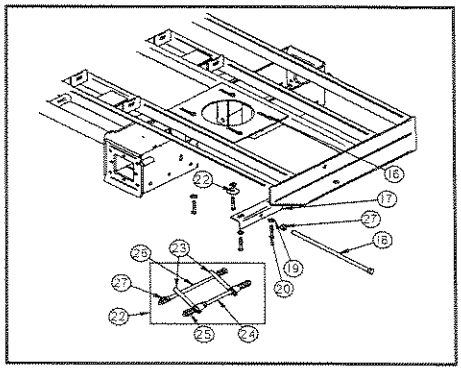

REF #	PART #	DESCRIPTION	QTY.
1	100018	Weldment - 6 Rail 60" Frame	1
2	B-204	3/8"-16 U-Bolt	4
3	N-160	3/8"-16 Coupling Nut	8
4	400027	H style Rear Guard	1
5	400026	Weldment - Low Ride Seat Pan w/ Hinge	1
6	100007	Weldment - Low Ride Transmission Frame	1
7	B-229	3/8"-16 x 5" Bolt	2
8	N-107	3/8"-16 Nyloc Nut	2
9	N-135	7/16"-20 Nyloc Nut	4
10	W-168	7/16" Standard Flat Washer	8
11	B-199	7/16"-20 x 2" Bolt	4
12	10100-ST	Bumper - XW/XF	1
13	W-160	10mm Flat Washer	2
14	B-179	3/8 - 16 X 2 1/2	2
15	N-108	3/8"-16 Whiz Flange Nut	2
16	N-103-W	5/16"-18 Whiz Flange Nut	4
17	72216	Pull Stop Weldment	1

REF #	PART #	DESCRIPTION	QTY.
18	B-280	1/2"-13x14" Engine Adjustment Bolt	1
19	W-113	5/16" Standard Flat Washer	4
20	B-156	5/16"-18 x 2" Bolt	4
21	W-107	Shark-Tooth Belleville Washer	1
22	72220	Belt Guide Assembly (Include 24,25,26)	
23	72217	Belt Guide Weldment	2
24	72222	1/2"-13x12 1/2" All Thread	1
25	N-110	Nut 1/2"-13	6
26	72222	1/2"-13x12 1/2" All Thread	1
27	N-110	Nut 1/2"-13	7
28	B-123	1/2"-13x1 1/2" Bolt	4
29	W-109	1/2" Flat Washer	4
30	97124	60" Crossmember	1
31	N-157	1/2"-13 Whiz Flange Nut	4
32	400008	Mount - Floor Pan Hinge Frame	2
33	400065	Standard Bolt-in Battery Box	1
	B-190	3/8"-16x1 1/2" Carriage Bolt	2
	N-108	3/8"-16 Whiz Flange Nut	2
34	97169	Plastic Plug	2

www.mymowerparts.com

For Dixie Chopper Discount Parts Call 606-678-9623 or 606-561-4983

DIXIE CHOPPER

XT3200 FRAME

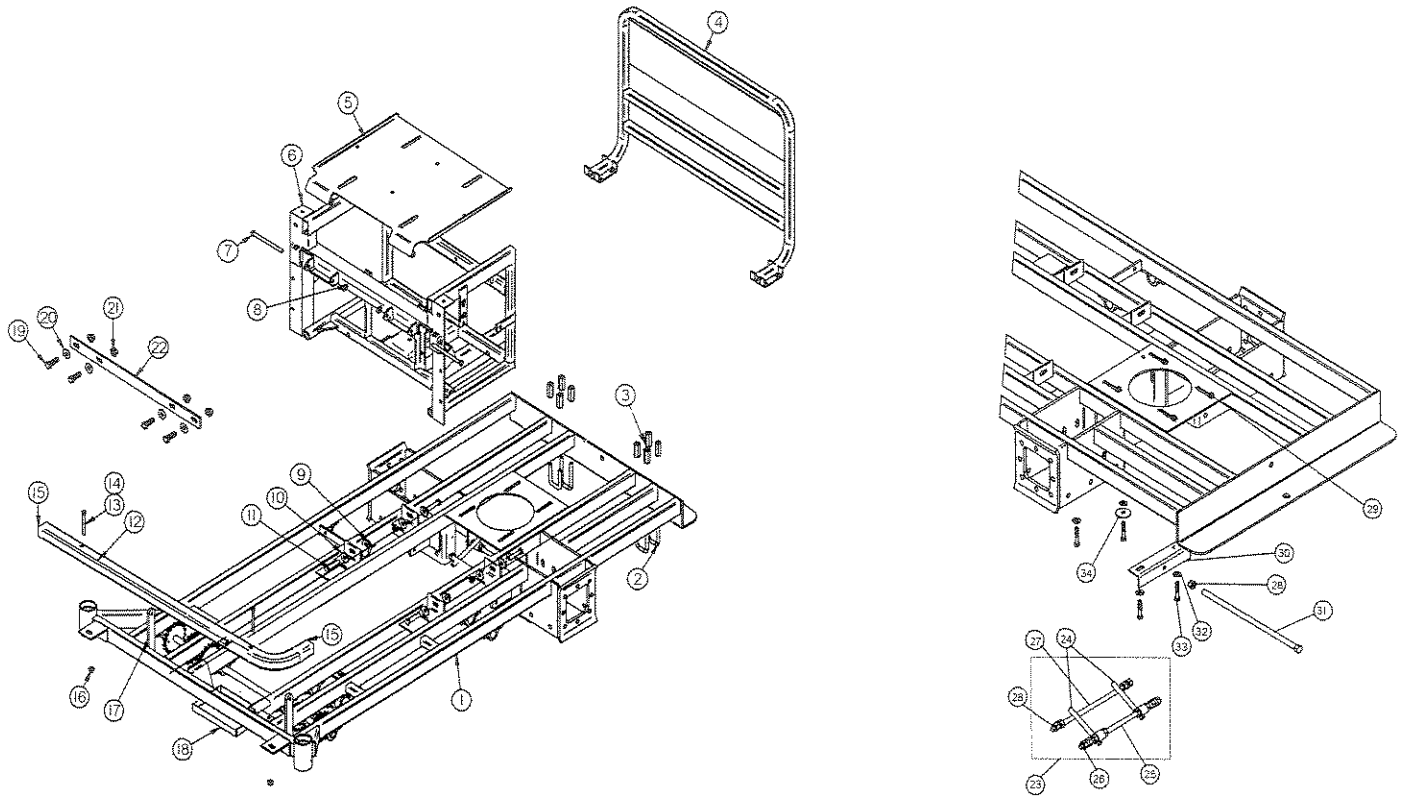

REF #	PART #	DESCRIPTION	QTY.
1	100069	Frame - Guardian 60"	1
2	B-204	3/8"-16 U-Bolts	4
3	N-160	3/8"-16 Coupling Nut	8
4	400111	Crash Guard	1
5	400026	Weldment - Low Ride Seat Pan w/Hinge	1
6	100007	Weldment - Low Ride Transmission Frame	1
7	B-229	3/8"-16x5" Bolt	2
8	N-107	3/8"-16 Nyloc Nut	2
9	N-135	7/16"-20 Nyloc Nut	4
10	W-168	7/16" Standard Flat Washer	8
11	B-199	7/16"-20x2" Bolt	4
12	10100-ST 67045-60S	Bumper Solid Bumper **(Optional)**	1
13	W-160	10mm Flat Washer	2
14	B-179	3/8"-16x2 1/2" Bolt	2
15	97169	Plastic Plug	2
16	N-108	3/8"-16 Whiz Flange Nut	2
17	400008	Mount - Floor Pan Hinge Frame	2

REF #	PART #	DESCRIPTION	QTY.
18	97145 B-190 N-108	Diesel Battery Box 3/8"-16x1 1/2" Carriage Bolt 3/8"-16 Whiz Flange Nut	1 2 2
19	B-123	1/2"-13x1 1/2" Bolt	4
20	W-109	1/2" Flat Washer	4
21	N-157	1/2"-13 Whiz Flange Nut	4
22	97124	60" Crossmember	1
23	72220	Belt Guide Assembly **Incl. #24-#26**	1
24	72217	Belt Guide Weldment	2
25	72222	1/2"-13x12 1/2" All Thread	1
26	N-110	1/2"-13 Nut	6
27	72222	1/2"-13x12 1/2" All Thread	1
28	N-110	1/2"-13 Nut	7
29	N-103-W	5/16"-18 Whiz Flange Nut	4
30	72216	Pull Stop Weldment	1
31	B-280	1/2"-13x14" Engine Adjustment Bolt	1
32	W-113	5/16" Standard Flat Washer	4
33	B-156	5/16"-18x2" Bolt	4
34	W-107	Shark-Tooth Belleville washer	1

www.mymowerparts.com

For Dixie Chopper Discount Parts Call 606-678-9623 or 606-561-4983

DIXIE CHOPPER
WHEELS & TIRES

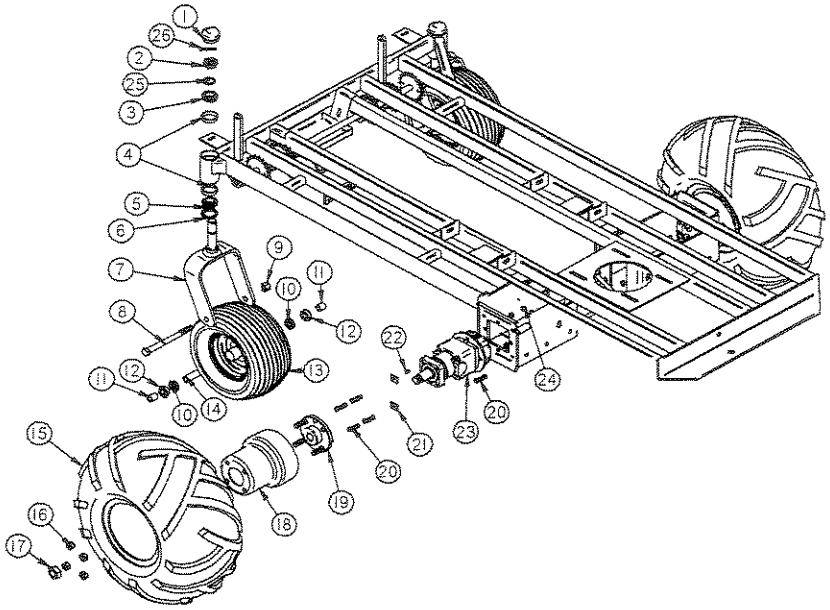

REF #	PART #	DESCRIPTION	QTY.
1	10220	Dust Cap	2
2	N-142	Castle Nut	2
3	10207	Top Bearing	2
4	10206	Outer Bearing Race	4
5	97171	Bottom Bearing	2
6	10208	Seal	2
7	100023	Standard Front Fork **(X2503, XWF2700, XG2703)**	2
	100019	Heavy Duty Front Fork **(SP2800EFI, XT3200)**	2
8	B-122	Standard - 5/8"-11x7 1/2" Bolt	2
	B-235	Heavy Duty - 5/8"-11x9" Bolt	2
9	N-115	Nut - 5/8"-11 Nyloc	2
10	67205	Inner Front Wheel Bearing	4
11	10203	Outer Front Wheel Spacer **(for standard Forks)**	4
	400052	Outer Front Wheel Spacer **(for Heavy Duty Forks)**	4
12	10205	Outer Front Wheel Bearing	4
13	97166	Assembly - Front Tire **(X2503, XWF2700, XG2703)**	2
	97165	Front Tire 13x6.50x6	
	10239	Rim	
	10127-S	Valve Stem	
	400130	Assembly - Run Flat Tire & Rim 13x6.5x6 **(Optional)**	
	400053	Assembly - Front Tire **(SP2800EFI, XT3200)**	2
	400070	Front Tire - 15x600-6	
	400071	Rim - 4.5"x6"x3.5" (Only)	
	10127-S	Valve Stem	
	400129	Assembly - Run Flat Tire & Rim 15x6.0x6 **(Optional)**	
14	67204	Inner Front Wheel Spacer	2

REF #	PART #	DESCRIPTION	QTY.
15	400019	Left Tire Assembly **(XWF2700, SP2800, XT3200)**	1
	97200	Turf Boss III Tire	
	400014	Rim	
	10127-S	Valve Stem	
	400020	Right Tire Assembly **(XWF2700, SP2800, XT3200)**	1
	97200	Turf Boss III Tire	
	400014	Rim	
	10127-S	Valve Stem	
	400154	24-10.5x10 Turf Boss IV Assembly (Right) **(XG2703, X2503)**	1
	400155	24-10.5x10 Turf Boss IV Assembly (Left) **(XG2703, X2503)**	1
	400153	Turf Boss IV Tire Only	
	400118	Rim	
	10127-S	Valve Stem	
16	N-113	Lug Nut	8
17	PB339303P	Wheel Motor Axle Nut	
	PW72693	Wheel Motor Axle Nut **(XT3200 Only)**	
18	67266	Brake Drum **(X2503, XG2703)** **(XWF2700, SP2800EFI)**	
19	67002	Wheel Flange w/studs	2
20	B-183	Wheel Motor Bolt - 1 1/4" x 3/8" Allen Head	8
	B-123	Wheel Motor Bolt **(XT3200 Only)** - 1/2"-13x1 1/2"	14
21	W-138	Wheel Motor Square Washer **(14 Cu. In. Wheel Motor Only)**	4
22	PW72546	1/4" Key **(X2503, XWF2700, SP2800EFI, XG2703)**	
	300339102	Key **(XT3200)**	
23	67114	Wheel Motor 14Cu.In. **(X2503, XG2703, XWF2700, SP2800)**	
	200018	Wheel Motor 18Cu.In. w/Brake **(XT3200)**	
24	N-127	Wheel Motor Nut - 3/8"-24 Lock Nut	8
	N-146	Wheel Motor Nut **(XT3200)** - 1/2"-13 Lock Nut Stover	14
25	W-131	1" ID x 1 1/2" OD x 1/8" Thick Washer	2
26	P-108	3/32" x 1 1/2" Cotter Pin	2

www.mymowerparts.com

For Dixie Chopper Discount Parts Call 606-678-9623 or 606-561-4983

DIXIE CHOPPER

FOOT PEDAL ASSEMBLY

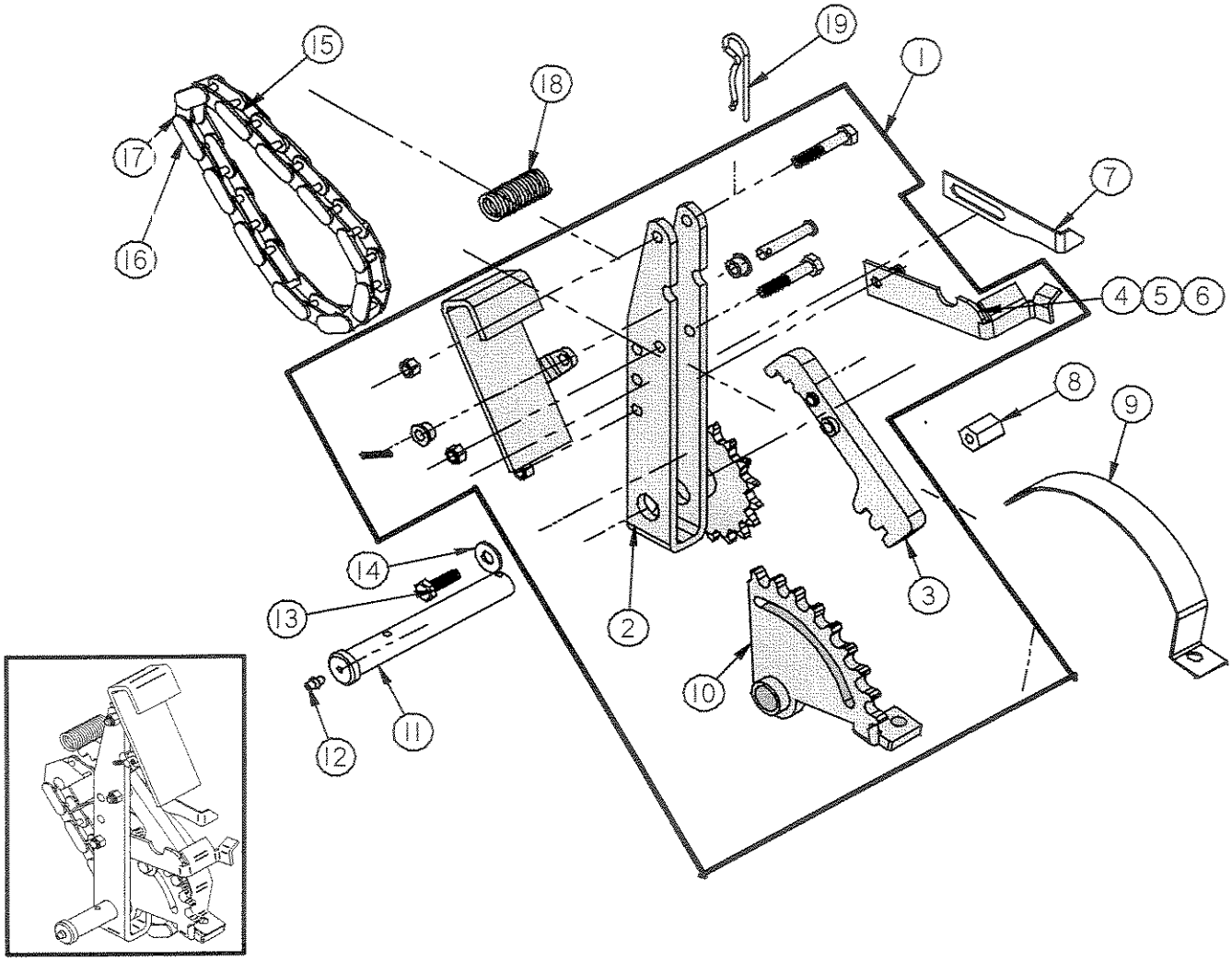

REF #	PART #	DESCRIPTION	QTY.
1	10107-1/2	Kit - Foot Pedal	1
2	10225-2	Weldment - #50 Foot Lift Arm	1
3	10224-1	Pawl	1
4	990735020	Foot Pedal Lock (**Incl. #5 - #6**)	1
5	W-164	Washer - 5/16" Spring Wafer	
6	N-144	Nut - 5/16"-18 Nylon Jam	
7	300008	Deck Height Pointer	1
8	N-130	Coupling Nut - 5/16"-18x1 3/4"	1
9	300007	Deck Height Indicator	1
10	10226-1	Lift Sprocket	1

REF #	PART #	DESCRIPTION	QTY.
11	10228-1	Pin	1
12	F-100	Grease Fitting	1
13	B-131	Bolt - 5/16"-18x1"	1
14	W-113	Washer - 5/16" Flat	1
15	68219	#50 Chain **(Include Ref #16)**	1
16	10233	#50 Half Link	
17	10232	#50 Master Link	1
18	20217-25	Spring	1
19	30213	Cotter Pin	1

www.mymowerparts.com

For Dixie Chopper Discount Parts Call 606-678-9623 or 606-561-4983

DIXIE CHOPPER

60" DECK LIFT SYSTEM

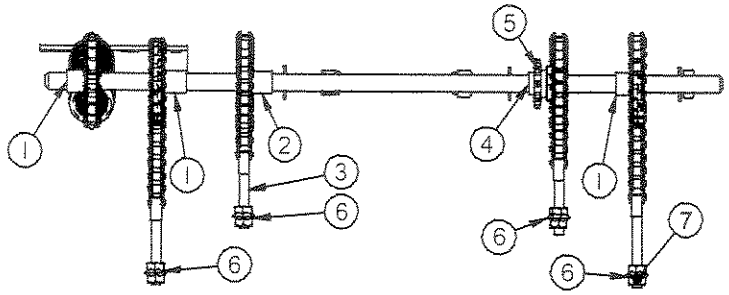

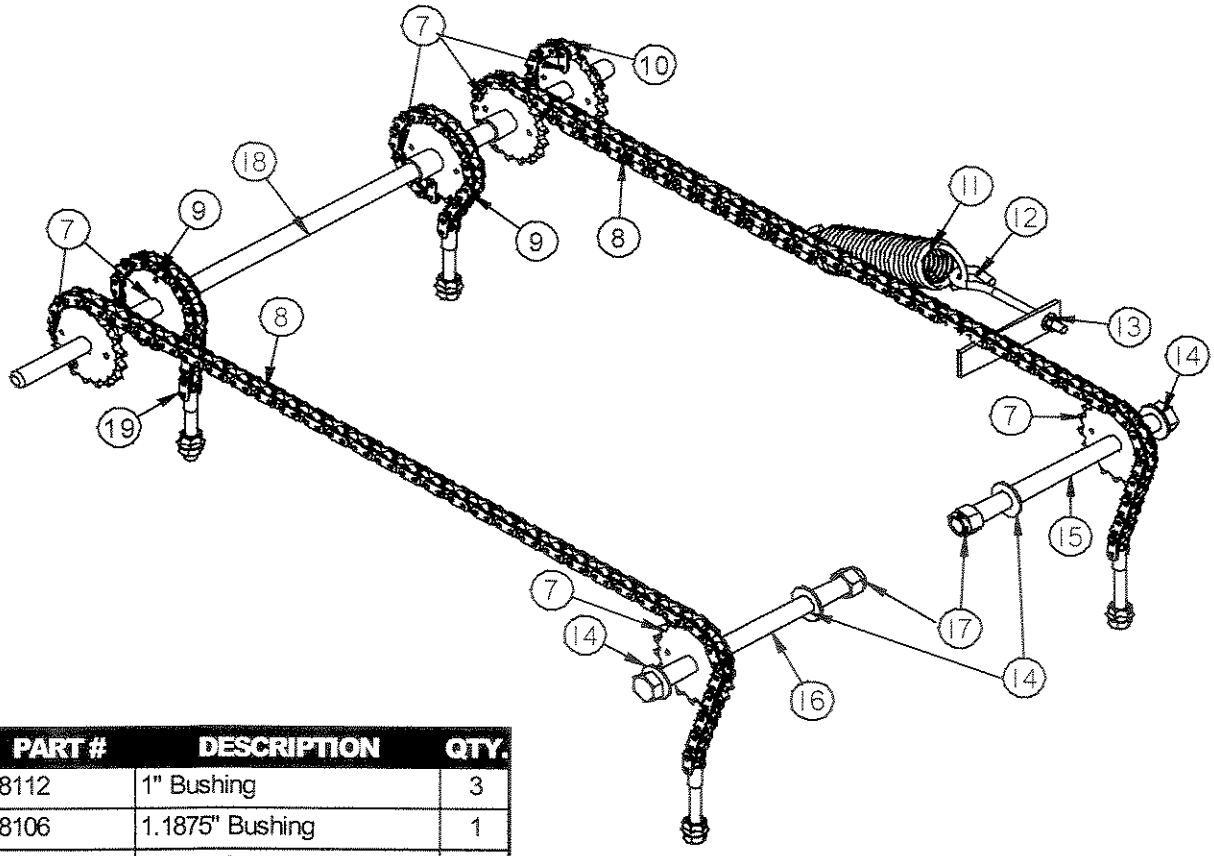

REF #	PART #	DESCRIPTION	QTY.
1	68112	1" Bushing	3
2	68106	1.1875" Bushing	1
3	S-114	1/2"-13 Stud	4
4	68105	1"OD x 3/4"ID x 3/8" Long	1
5	68104	#50 Small Sprocket	1
6	N-157	1/2"-13 Whiz Flange Nut	8
7	68103	Deck Lift Sprocket #50	7
8	990710003	#50 Rear Deck Lift Chain	2
9	68217	#50 Front Deck Lift Chain	2
10	990710002	#50 Return Spring Chain	1
11	97455	200 lb. Return Spring	1
12	B-241	3/8"-16 Eye Bolt	1

REF #	PART #	DESCRIPTION	QTY.
13	N-108	3/8"-16 Whiz Flange Nut	1
14	W-154	3/4" Flat Washer	4
15	B-239	3/4"-10x10" Bolt	1
16	B-238	3/4"-10x8.5" Bolt	1
17	N-158	3/4"-10 Nyloc Nut	2
18	68113	3/4"x31.5" Rod	1
	100064	Rod - 3/4"x30.5" **(XT3200)**	1
19	10232	#50 Master Link	10

www.mymowerparts.com

For Dixie Chopper Discount Parts Call 606-678-9623 or 606-561-4983

DIXIE CHOPPER

60" DECK

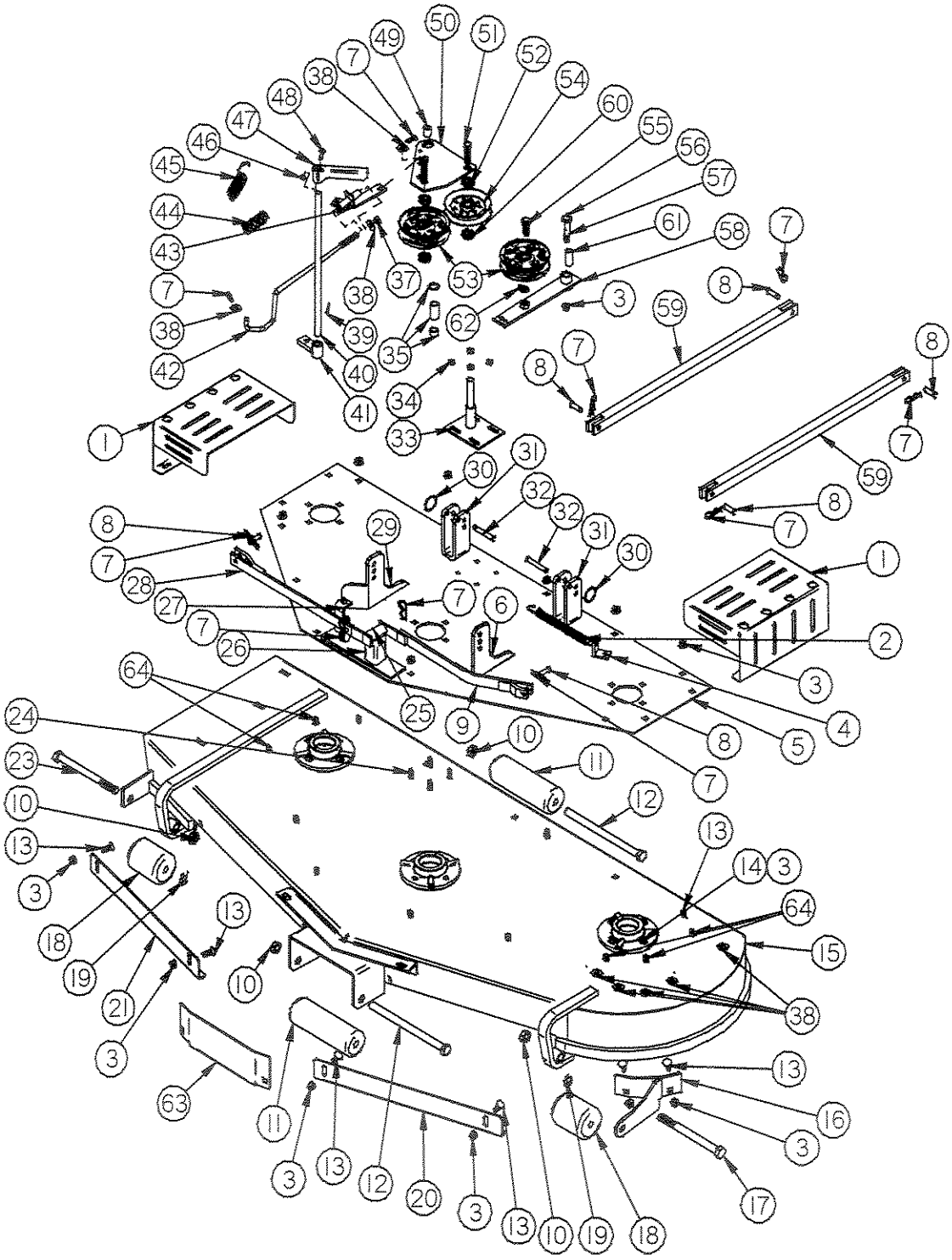

www.mymowerparts.com

For Dixie Chopper Discount Parts Call 606-678-9623 or 606-561-4983

DIXIE CHOPPER
60" DECK

REF #	PART #	DESCRIPTION	QTY.
	300006	60" Deck Assembly	
1	300056	Pulley Guard	2
2	10222	Spring	1
3	N-108	3/8" Whiz Flange Nut	42
4	65308-L	Idler Spring Tab	1
5	300002	60" Top Plate Weldment	1
6	334000130111	Left 3-Hole Tab	1
7	20224	Hairpin Clip	10
8	P-102	3/8"x1.25" Clevis Pin	6
9	30232	Left Scissor Arm	1
10	N-156	5/8"-11 Nyloc Jam Nut	4
11	30240-O	Long Roller	2
12	B-255	5/8"-11x9" Carriage Bolt	2
13	B-110	3/8"-16x3/4" Carriage Bolt	24
14	B-136	3/8"-16x1.25" Carriage Bolt	12
15	300009	60" Deck Weldment **(Include #15,16,20,21,63)**	1
16	300003	Weldment - Roller Bracket	1
17	B-253	5/8"-11x6" Carriage Bolt	1
18	67240	Short Roller	2
19	W-135	5/8" Flat Washer	2
20	300005	Left 60" Blow Out Baffle	1
21	300004	Right 60" Blow Out Baffle	1
23	B-254	5/8"-11x7" Carriage Bolt	1
24	B-172	1/4"-20x1" Bolt	4
25	F-100	3/16" Drive in Grease Fitting	1
26	67131	Scissor Link Tower Weldment	1
27		Enguaging Tower Weldment	1
28	30231	Right Scissor Arm	1
29	334000130110	Right 3-Hole Tab	1
30	C-104	Ring Clip	2
31	334000130109	2-Hole Tab	2
32	P-103	3/8" x 2" Clevis Pin	2
33	30235	Pivot Stand	1
34	N-102	1/4"-20 Whiz Flange Nut	4

REF #	PART #	DESCRIPTION	QTY.
35	30112	1/8" Shim (if needed)	*
	10203	1" Shim (if needed)	*
	65278	1/2" Shim (if needed)	*
37	N-107	3/8 -16 Nylon Lock Nut	1
38	W-104	3/8" Flat Washer	13
39	P-113	Roll Pin	1
40	30211	Enguaging Shaft	1
41	30210	Cam Weldment	1
	30209-1	Enguaging Rod Assembly (Inc. #37,38,42,43,44)	
42	97343	Enguaging Rod	1
43	30209-B	Connecting Arm Bracket	1
44	30207-S	Enguaging Spring	1
45	20217-25	Return Spring	1
46	N-173	#10 Nyloc Nut	1
47	30212	Enguaging Handle (Coated)	1
48	B-245	#10-24 Carriage Bolt	1
49	30206	5/8"x3/4"x1 1/2"Bushing	1
	300012	Triangle Plate Assembly (Inc.#49,50,51,52,60,F-102)	
50	300011	Weldment - Triangle Plate	1
51	B-185	5/8"-11 x 2" Bolt	2
52	N-180	5/8"-11 Jam Lock Nut	2
53	30224	Flat Idler Pulley	2
54	30234	V Pulley	1
55	B-117	1/2"-13x1.25" Bolt	1
56	F-101	1/4"-28 90 Grease Fitting	1
57	B-118-G	1/2 x 1 1/2 Shoulder Bolt **(Incl.- Ref. #56)**	1
58	30223	Idler Arm	1
59	30214-86	Stabilizer Bar	2
60	N-181	5/8 - 11 Lock nut	2
61	20276	Bronze Bushing	1
62	W-112	1/2" Lock Washer	1
63	300054	60" Center Front Baffle	1
64	B-135	3/8"-16x1" Bolt	5
	300048	Deck Pulley Guard Kit F/Fan Set-Up **(Optional)**	

* Use individually or a combination of 10203, 65278 and 30112 to achieve proper belt alignment between the triangle plate and the top center deck spindle pulley.

www.mymowerparts.com

For Dixie Chopper Discount Parts Call 606-678-9623 or 606-561-4983

DIXIE CHOPPER
60" OCDC

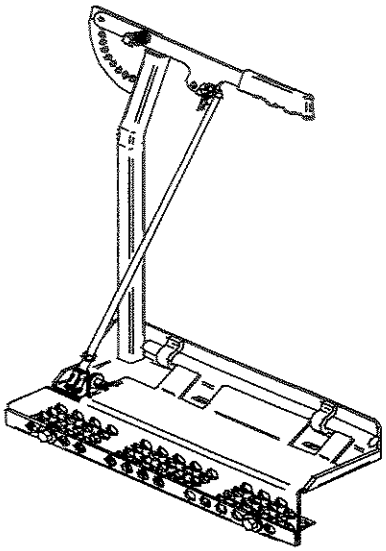

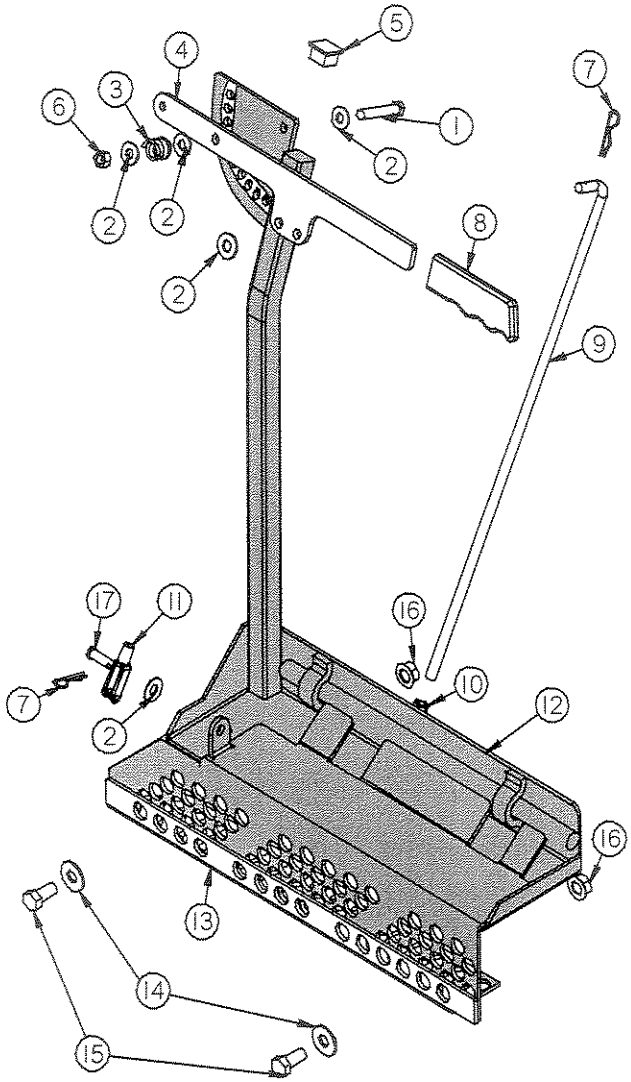

REF #	PART #	DESCRIPTION	QTY.
	68122-60	Assembly - 60" OCDC	
1	B-179	3/8"-16 x2.5" Bolt	1
2	W-104	3/8" Standard Flat Washer	5
3	20252	Spring	1
4	900014	Handle	1
5	68142	1"x1" Plastic Plug	1
6	N-107	3/8"-16 Nyloc Nut	1
7	20224	Clip	2
8	67258	Handle Grip	1

REF #	PART #	DESCRIPTION	QTY.
9	97122	Control Rod (Inc. #9,11,16)	1
10	N-150	3/8"-24 Nut	1
11	N-155	3/8"-24 Yoke	1
12	68122-60W	OCDC Weldment	
13	68136	Lower Screen **(Optional)**	1
14	W-109	1/2" Standard Flat Washer	2
15	B-138	1/2"-13x1" Bolt	2
16	N-157	1/2"-13 Whiz Flange Nut	2
17	P-102	3/8"x1.25" Clevis Pin	1

www.mymowerparts.com

For Dixie Chopper Discount Parts Call 606-678-9623 or 606-561-4983

DIXIE CHOPPER
HUBS AND BELTS

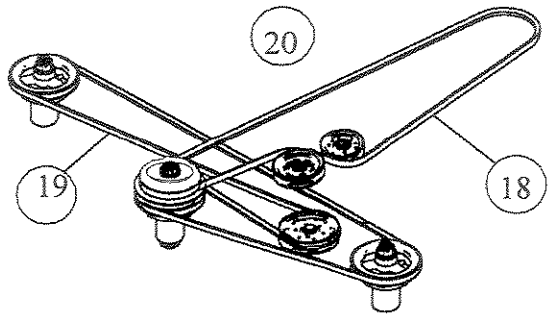

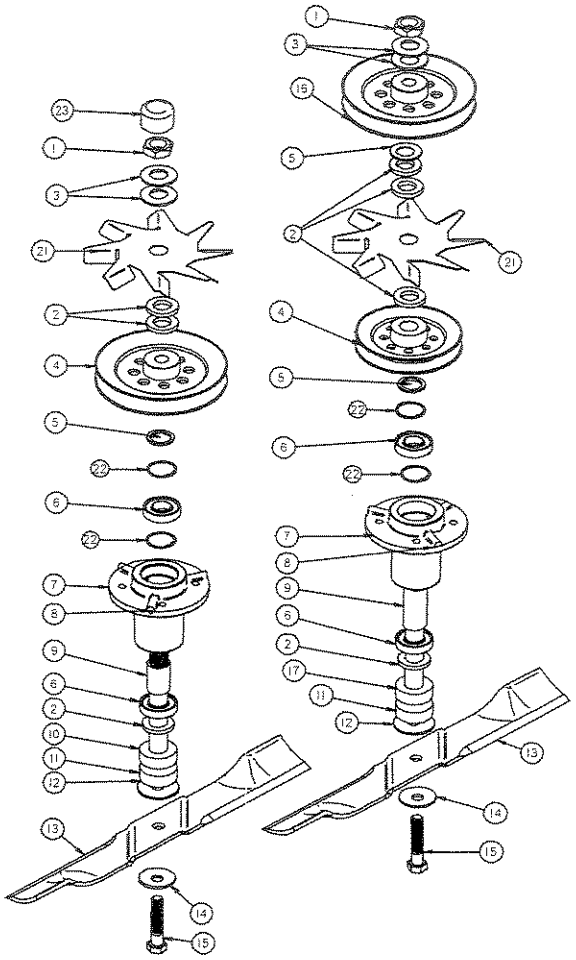

REF #	PART #	DESCRIPTION	QTY.
	10161	Outside Complete Spindle Assembly	
	10161-L	Center Complete Spindle Assembly	
1	N-167	1" Nut	3
2	W-146	1/4" Washer	10
3	W-137	1" Belleville Washer	6
4	9907525X100S	5.25" Pulley	3
5	W-131	1/8" Washer	4
6	30218	Sealed Bearing	3
7	30241	Deck Hub **(2 Snap Rings & 1 Bearing)**	3
8	F-102	Grease Fitting	3
9	30219	Inner Deck Hub Spacer	3
10	30217	Short Blade Shaft	2
11	W-182 30242	1/2" OD. x .656 ID. X 1/4" Thick Washer 1/2" Blade Spacer (Use when H & N blade are used)	6
12	W-101	Fiber Washer	3
13	30227-60X 30227-60H 30227-60N	60" X Style Blade 60" Standard High Lift Blade **(Optional)** 60" Heavy Duty High Lift Blade **(Optional)**	3

REF #	PART #	DESCRIPTION	QTY.
14	W-100	5/8" Belleville Washer	3
15	B-121	2.5" Blade Bolt (use w/o blade spacer)	
	B-121-L	3" Blade Bolt (use with blade spacer)	3
	B-121-LL	3.25" Blade Bolt (use with Whiz-Mow)	
16	9907675X100S	6.75" Pulley	1
17	30217-L	Long Blade Shaft	1
18	9907B85	Engine - Deck Belt	1
19	9907B130	Deck Belt	1
20	9907B41	Engine-Trans. Belt (not shown)	1
21	300058	Fan - 1" x 8 1/4" Steel Gray & Decal	3
22	788080	Retainer Ring	
23	67255	Spindle Hub Caps	2
	30302	Whiz-Mow (**Optional**)	
	98124	Hard-Faced 60" Blades (**Optional**)	
	98005	Offset 60" Blades **(Optional)**	

www.mymowerparts.com

For Dixie Chopper Discount Parts Call 606-678-9623 or 606-561-4983

DIXIE CHOPPER
TRANSMISSION FRAME ASSEMBLY

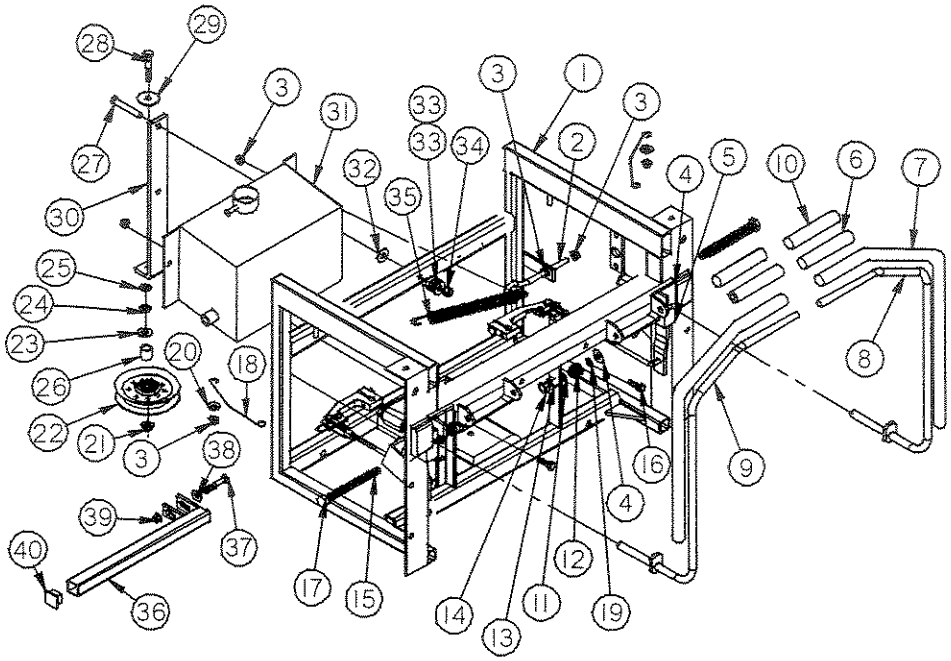

REF #	PART #	DESCRIPTION	QTY.
1	100007	Low Ride Transmission Frame	1
2	B-150	5/16" x 2 1/2" Eye Bolt	1
3	N-103-W	5/16"-18 Whiz Flange Nut	8
4	W-171	1/2" ID. x 1.25 OD. Teflon Washer	4
5	65205	Steering Block Weldment	2
6	20257	Rubber Handle	2
7	400037	Foam Lever Sleeve	2
8	400069	Left Steering Lever	1
9	400068	Right Steering Lever	1
10	67259	Foam Handle Grip	1
11	W-110	Machine Washer	2
12	20252	Spring	2
13	N-110	1/2"-13 Hex Nut	2
14	N-111	1/2"-13 Hex Jam Nut	2
15	F-101	Grease Fitting 90 degree	2
16	B-131	5/16"-18x1" Bolt	2
17	B-143-G	1/2"x4 1/2" Bolt w/Grease Fitting	2
18	40218	Seat Strap	2
19	W-156	9/16" Standard Flat Washer	2
20	W-113	5/16" Flat Washer	4

REF #	PART #	DESCRIPTION	QTY.
21	N-117	3/8"-16 Large Flange Lock Nut	1
22	30234	Pulley	1
23	W-124	3/8" Machine Washer .120"	
24	W-123	3/8" Machine Washer .060"	
25	W-176	3/8" Machine Washer .031"	
26	97415	Spacer (Inside Pulley)	1
27	B-165	3/8"-16 x 2" Bolt	1
28	B-124	3/8"-16x1 3/4" Bolt	1
29	W-104	3/8 Standard Flat Washer	1
30	100011	Idler Arm	1
31	200008	Hydraulic Tank	1
32	W-125	3/8"x7/8" Plastic Washer	1
33	W-126	3/8" Dish Spring Washer	2
34	N-107	3/8"-16 Nylon Lock Nut	1
35	10222	Spring	1
36	97021	Wide Fender Brace (SP2800, XWF2700, XT3200)	1
37	B-165	Bolt - 3/8"-16x2" Grade 5	1
38	W-113	Washer - 5/16" Standard Flatwasher	1
39	N-108	Nut - 3/8"-16 Whiz Flange	1
40	68142	Plastic Plug 1"x1"	1

www.mymowerparts.com

For Dixie Chopper Discount Parts Call 606-678-9623 or 606-561-4983

DIXIE CHOPPER

X2503, XWF2700, SP2800EFI, XG2703
TRANSMISSION FRAME ASSEMBLY (CONT'D)

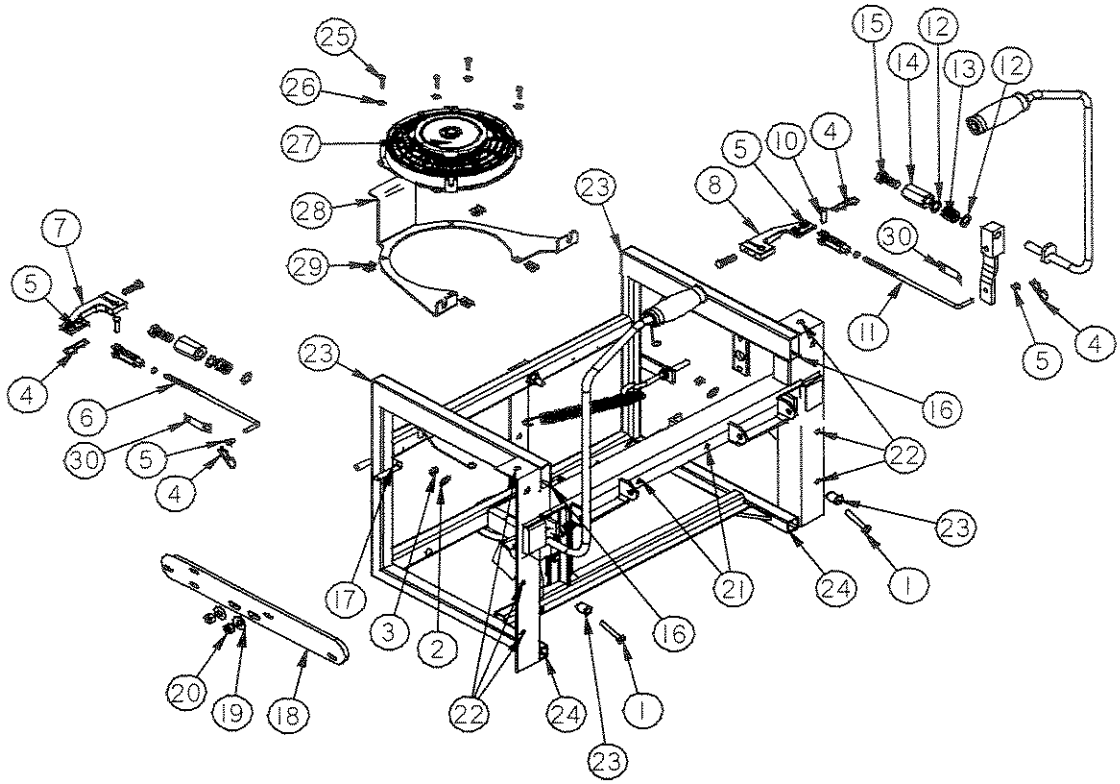

REF #	PART #	DESCRIPTION	QTY.
1	B-129	5/16"-18x2 1/4" Bolt	2
2	W-113	5/16" Flat Washer	2
3	N-103	5/16"-18 HH Nut	2
4	20224	Hairpin Clip	4
5	20222	Plastic Bushing	4
6	200001	Right Pump Control Rod	1
	20214	Yoke - 5/16"-24	1
	N-105	Nut - 5/16"-24	1
7	65207-R	Right Pump Control Arm	1
	P-118	Roll Pin - 3/16"x1 1/2"	1
	B-131	Bolt - 5/16"-18	1
8	65207-L	Left Pump Control Arm	1
	P-118	Roll Pin - 3/16"x1 1/2"	1
	B-131	Bolt - 5/16"-18	1
10	P-101	Pin - 5/16"x1" Clevis	2
11	200002	Left Pump Control Rod	1
	20214	Yoke - 5/16"-24	1
	N-105	Nut - 5/16"-24	1

REF #	PART #	DESCRIPTION	QTY.
12	W-110	Washer - 1/2" Machine	4
13	20252	Spring	2
14	N-175	Coupling Nut - 1/2"-13x1.850 Long	2
15	B-138	Bolt - 1/2"-13x1"	2
16	67256	Plastic Plug 1"x2"	2
17	B-206	U-Bolt **(EFI Only)** - 3/8"-16	1
18	600031	EFI Module Mount	1
19	W-104	Washer **(EFI Only)** - 3/8" Flat	2
20	N-107	Nut **(EFI Only)** - 3/8"-16 Nylon Lock	2
21	N-188	1/4"-20 AR Series Threaded Insert	2
22	N-152	1/4"-20 Nut Insert	6
23	N-153	5/16"-18 Insert Nut	4
24	68142	Plastic Plug 1"x1"	2
25	B-203	10-24x3/4" S.S. Bolt **(XWF2700,SP2800EFI)**	4
26	W-152	#10 S.S. Washer **(XWF2700, SP2800EFI)**	4
27	200043	Electric Fan **(XWF2700, SP2800EFI)**	1
28	200042	Electric Fan Mount **(XWF2700, SP2800EFI)**	1
29	C-105	10-24 U-Clips **(XWF2700, SP2800EFI)**	4
30	20223	Backing Clip	2

www.mymowerparts.com

For Dixie Chopper Discount Parts Call 606-678-9623 or 606-561-4983

DIXIE CHOPPER

XT3200 TRANSMISSION FRAME ASSEMBLY (CONT'D)

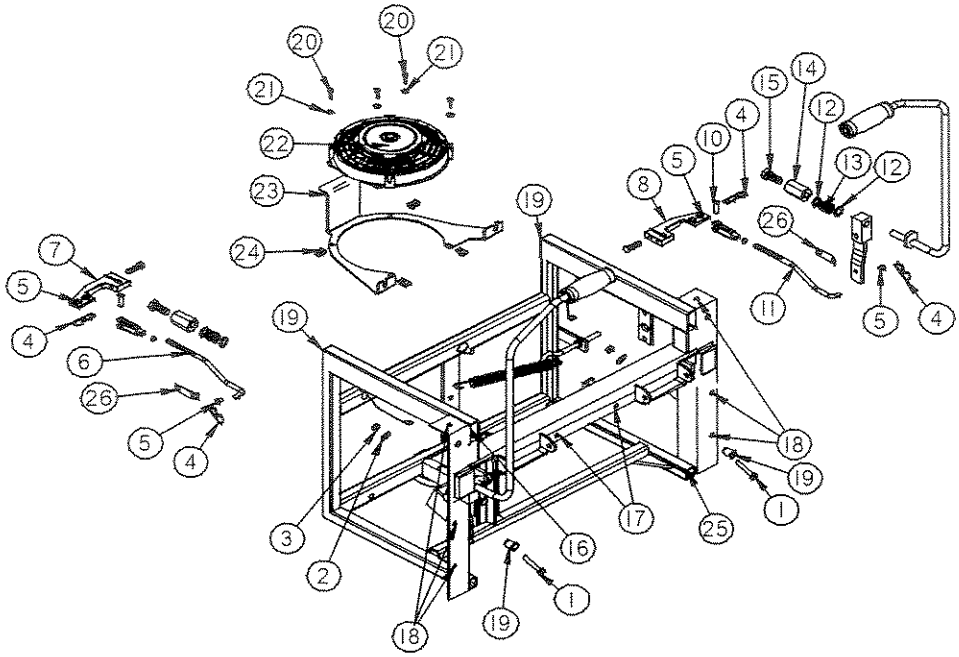

REF #	PART #	DESCRIPTION	QTY.
1	B-129	5/16"-18x2 1/4" Bolt	2
2	W-113	5/16" Flat Washer	2
3	N-103	5/16"-18 HH	2
4	20224	Hairpin Clip	4
5	20222	Plastic Bushing	4
6	200020	16 Ser. Right Pump Control Rod	1
	20214	5/16"-24 Yoke	1
	N-105	5/16"-24 Nut	1
7	200004	16 Ser. Right Pump Control Arm	1
	P-118	3/16"x1 1/2" Roll Pin	1
	B-131	5/16"-18 Bolt	1
8	200005	16 Ser. Left Pump Control Arm	1
	P-118	3/16"x1 1/2" Roll Pin	1
	B-131	5/16"-18 Bolt	1
10	P-101	5/16"x1" Clevis Pin	2

REF #	PART #	DESCRIPTION	QTY.
11	200019	16 Ser. Left Pump Control Rod	1
	20214	5/16"-24 Yoke	1
	N-105	5/16"-24 Nut	1
12	W-110	1/2" Machine Washer	4
13	20252	Spring	2
14	N-175	1/2"-13x1.850 Long Coupling Nut	2
15	B-138	1/2"-13x1" Bolt	2
16	67256	Plastic Plug 1"x2"	2
17	N-188	1/4"-20 AR Series Threaded Insert	2
18	N-152	1/4"-20 Nut Insert	6
19	N-153	5/16"-18 Nut Insert	4
20	B-203	10-24x3/4" S.S. Bolt	4
21	W-152	#10 S.S. Washer	4
22	200043	Electric Fan	1
23	200042	Electric Fan Mount	1
24	C-105	10-24 U-Clip	4
25	68142	Plastic Plug 1"x1"	2
26	20223	Backing Clip	2

www.mymowerparts.com

For Dixie Chopper Discount Parts Call 606-678-9623 or 606-561-4983

DIXIE CHOPPER

X2503, XWF2700, XG2703, SP2800EFI
TRANSMISSION & DRIVE

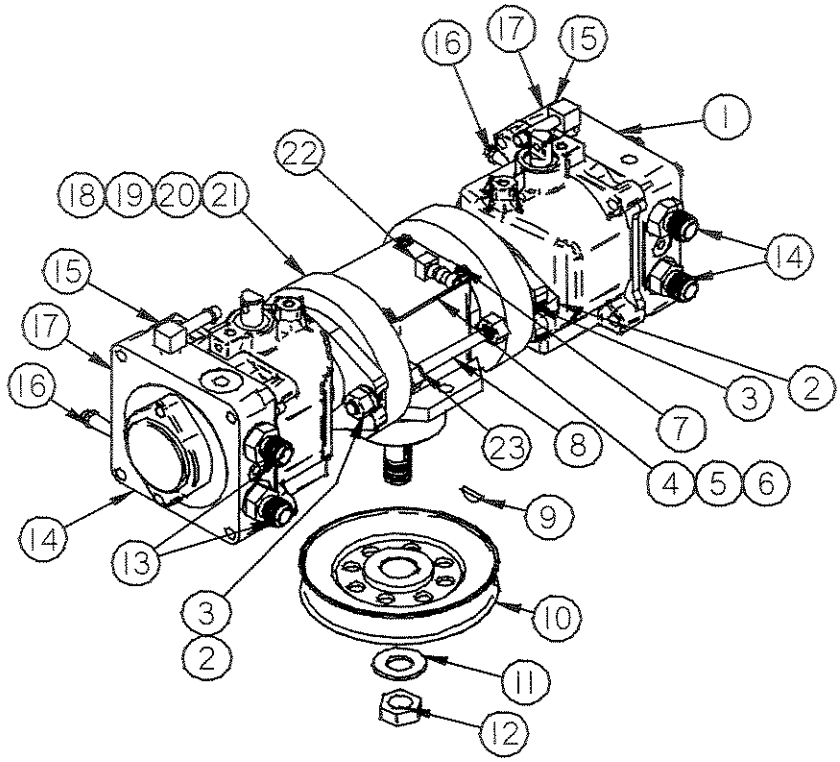

REF #	PART #	DESCRIPTION	QTY.
1	65070	Sundstrand 10A Pump - Right	1
2	N-168	3/8"-24 Whiz Flange Nut	4
3	W-169	Washer - 5/16" Grade 8 Flat	4
4	000365201	T Gear Box (**Complete Gear Box Only**)	1
5	788101	T Box Gasket	1
6	772150	T Box Cover Plate	1
7	792025	T Box Cover Plate Bolt	4
8	65206	3/8" Threaded Rod	2
9	K-102	Woodruff Key 3/16"x 3/4"	1
10	200041	525X750S Transmission Pulley	1
11	W-132	3/4" Belleville Washer	1
12	N-114	3/4"-16 Jam Nut	1
13	65004	High Pressure Port Fitting	4
14	65071	Sundstrand 10A Pump - Left	1

REF #	PART #	DESCRIPTION	QTY.
15	67015	Case Bleed Fitting	2
16	65072	Charge Pump Inlet Fitting	2
17	2513030	Dump Valve - no cross port	2
18	65001	Small Bell Housing	2
19	788030B	Bearing Plate Gasket	2
20	792026	Bell Housing Bolt	8
21	65024	Pump O-Ring	2
22	68031	T Box Fitting (Brass)	1
23	N-184	3/8"-24 Gr. 8 Standard Hex Nut	4

www.mymowerparts.com

For Dixie Chopper Discount Parts Call 606-678-9623 or 606-561-4983

DIXIE CHOPPER
XT3200
TRANSMISSION & DRIVE

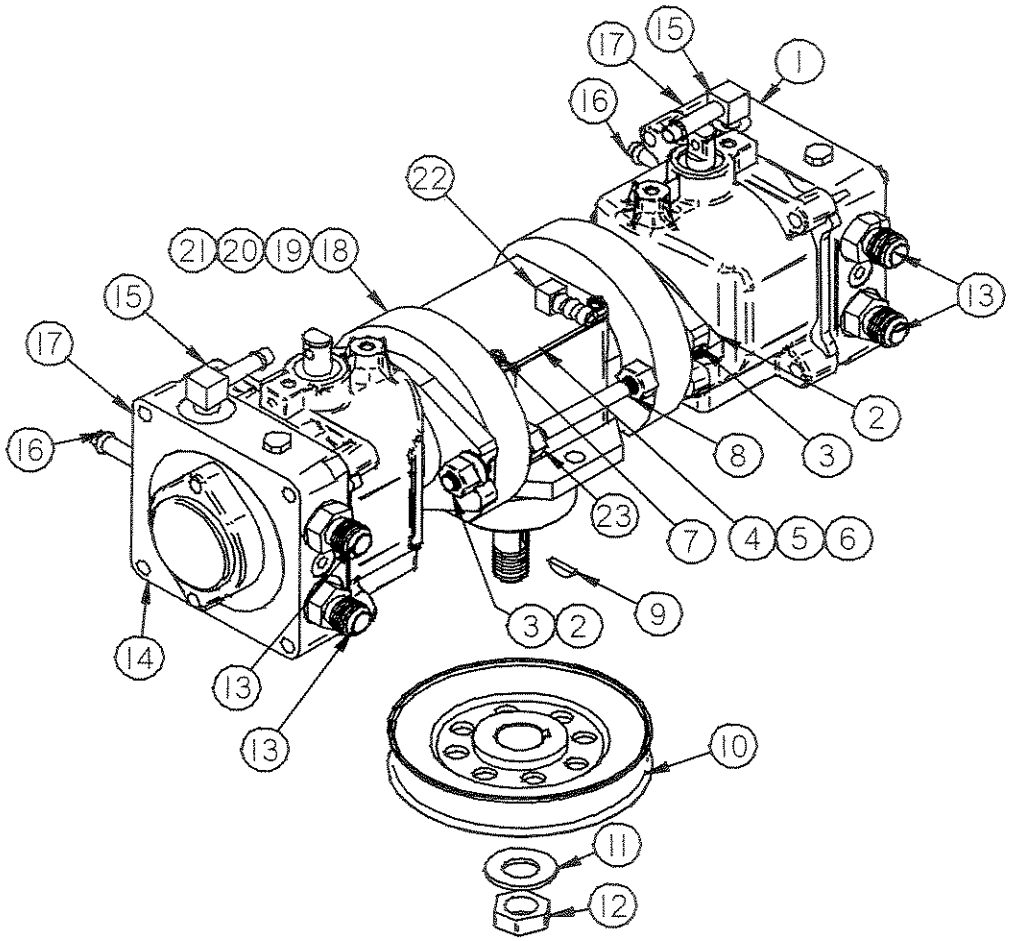

REF #	PART #	DESCRIPTION	QTY.
1	200012	Pump -16 Ser. Right	1
2	N-168	3/8"-24 Whiz Flange Nut	4
3	W-169	5/16" Grade 8 Flat Washer	4
4	000365201-L	T-Gear Box (**Complete Gear Box Only**)	1
5	788101	T-Box Gasket	1
6	772150	T-Box Cover Plate	1
7	792025	T-Box Cover Plate Bolt	4
8	65206	3/8" Threaded Rod	2
9	K-102	Woodruff Key 3/16"x3/4"	1
10	200041	525X750S Transmission Pulley	1
11	W-132	3/4" Belleville Washer	1
12	N-114	3/4"-16 Jam Nut	1
13	65004	High Pressure Port Fitting	4

REF #	PART #	DESCRIPTION	QTY.
14	200013	Pump -16 Ser. Left	1
15	67015	Case Bleed Fitting	2
16	72016	Straight 1/2"x1/2" Fitting	2
17	2513030	Dump Valve - No Cross Port	2
18	200003	Bell Housing - 16 Ser. Pump	2
19	788030B	Bearing Plate Gasket	2
20	792026	Bell Housing Bolt	8
21	65024	Pump O Ring	2
22	68031	T-Box Fiiting (Brass)	1
23	N-184	3/8"-24 Gr. 8 Standard Hex Nut	4

www.mymowerparts.com

For Dixie Chopper Discount Parts Call 606-678-9623 or 606-561-4983

DIXIE CHOPPER

X2503, XWF2700, XG2703, SP2800EFI
14 Cu. In WHEEL MOTOR

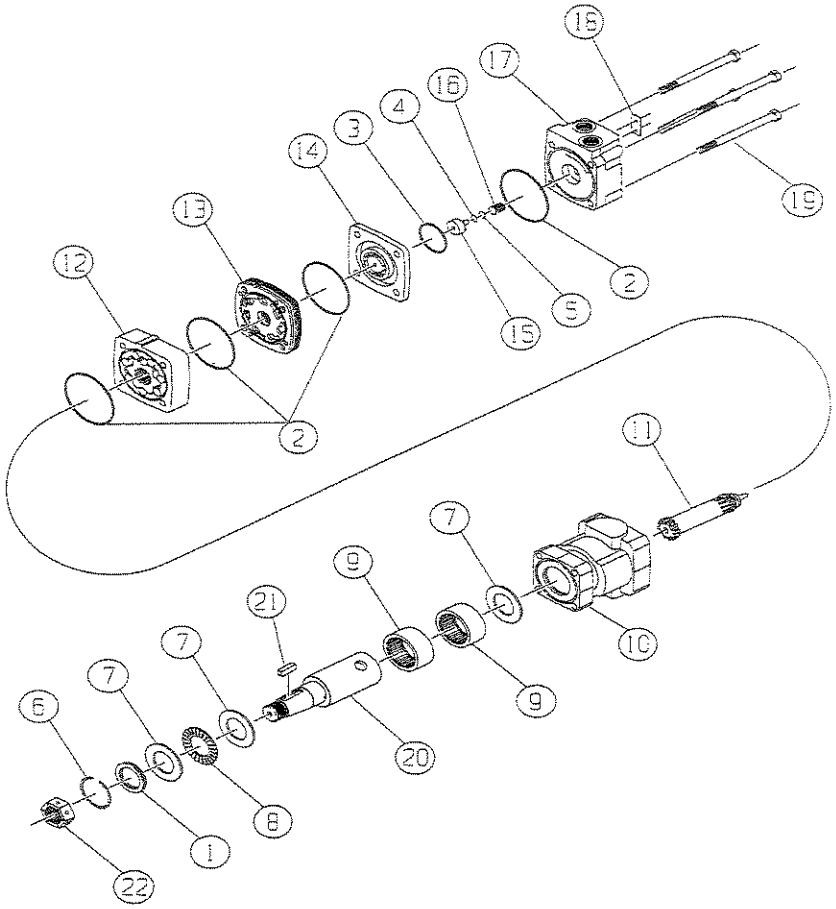

REF #	PART #	DESCRIPTION	QTY.
	67114	Complete 14 Cu. In. Wheel Motor Identification # W80379	2
	PB333700	**Seal Kit (Contains item 1-5)**	
1	PB018069	Dust/Shaft Seal	1
2	IN KIT	Body Seal	4
3	IN KIT	Commutator Seal	1
4	IN KIT	O-ring Seal	1
5	IN KIT	Teflon Back-up Seal	1
6	PB018073	Snap Ring	1
7	PB018054	Thrust Washer	3
8	PB018052	Thrust Bearing	1
9	PB018053	Housing Bearing	2
10	PB130015	Housing	1

REF #	PART #	DESCRIPTION	QTY.
11	PB014027	Drive Link	1
12	PB332014	Rotor Assembly	1
13	PB015008	Manifold	1
14	PB012013	Commutator Assembly	1
15	PB018056	Endcover Piston	1
16	PB018059	Piston Spring	1
17	PB160007G	Endcover	1
18	N/A	ID Tag	1
19	PB334014	Assembly Bolts	4
20	PW72545	Shaft	1
21	PW72546	Shaft Key	1
22	PB339303P	Shaft Nut	1

www.mymowerparts.com

For Dixie Chopper Discount Parts Call 606-678-9623 or 606-561-4983

DIXIE CHOPPER

XT3200
18 Cu. In. WHEEL MOTOR
W/Brake

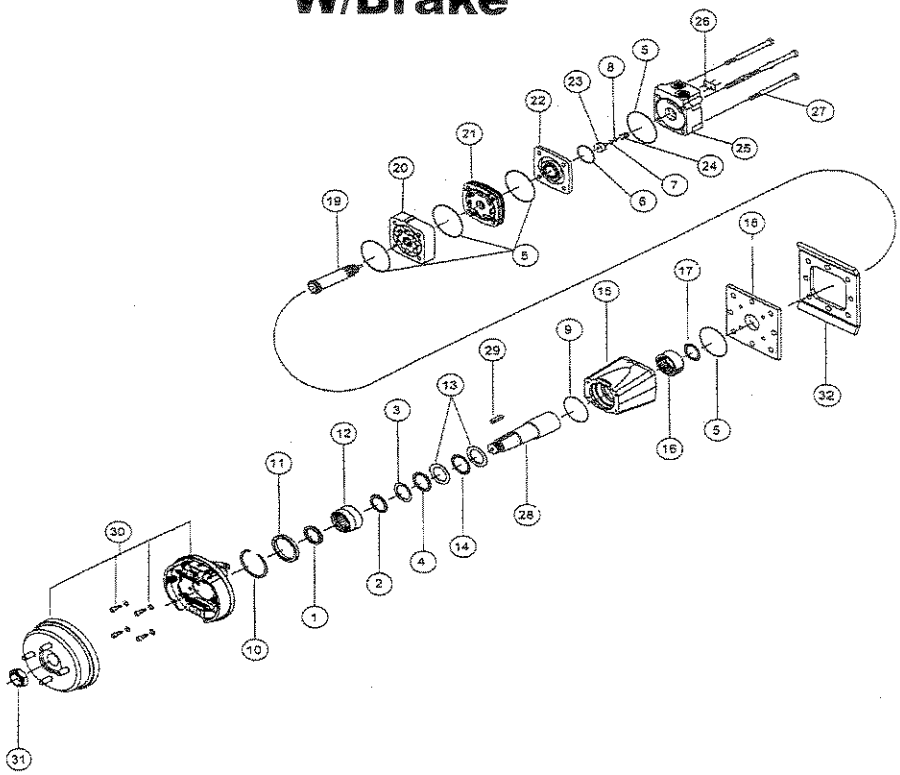

REF #	PART #	DESCRIPTION	QTY.
	200018	18 Cu. In. Wheel Motor w/Brake System	2
	300333850	Seal Kit - Contains Items 1-9	
1	In-Kit	Dust Seal	1
2	In-Kit	Metal Back Up Ring	1
3	In-Kit	Back Up Seal	1
4	In-Kit	Shaft Seal	1
5	In-Kit	Body Seal	5
6	In-Kit	Commutator Seal	1
7	In-Kit	O-Ring Seal	1
8	In-Kit	Back Up Seal	1
9	In-Kit	Housing Seal	1
10	700018013	Retaining Ring	1
11	700018085	Bearing Spacer	1
12	300018021	Front Thrust Bearing	1
13	300018002	Thrust Washer	2
14	300018003	Front Thrust Bearing	1
15	300130035	"35" Housing	1

REF #	PART #	DESCRIPTION	QTY.
16	500018003	Rear Housing Bearing	1
17	300018107	Rear Thrust Bearing	1
18	300012016	Mid Mount Plate	1
19	300014027	18 Drive Link	1
20	300332018	18 Rotor Set	1
21	300015008	Manifold	1
22	300012013	Commutator Assembly	1
23	300018056	Piston	1
24	300018059	Piston Spring	1
25	300160007G	Endcover	1
26	N/A	"Not Orderable"	1
27	300335018	18 Rotor Bolts	4
28	300110051	Shaft	1
29	300339102	Shaft Key	1
30	300018105WHAZ	Brake Kit	1
31	PW72693	Lock Nut	1
32	200016	Wheel Motor Bracket Face Plate (Face Plate Comes With Frame)	

www.mymowerparts.com

For Dixie Chopper Discount Parts Call 606-678-9623 or 606-561-4983

DIXIE CHOPPER

X2503, XWF2700, XG2703
HYDRAULIC HOSE DIAGRAM

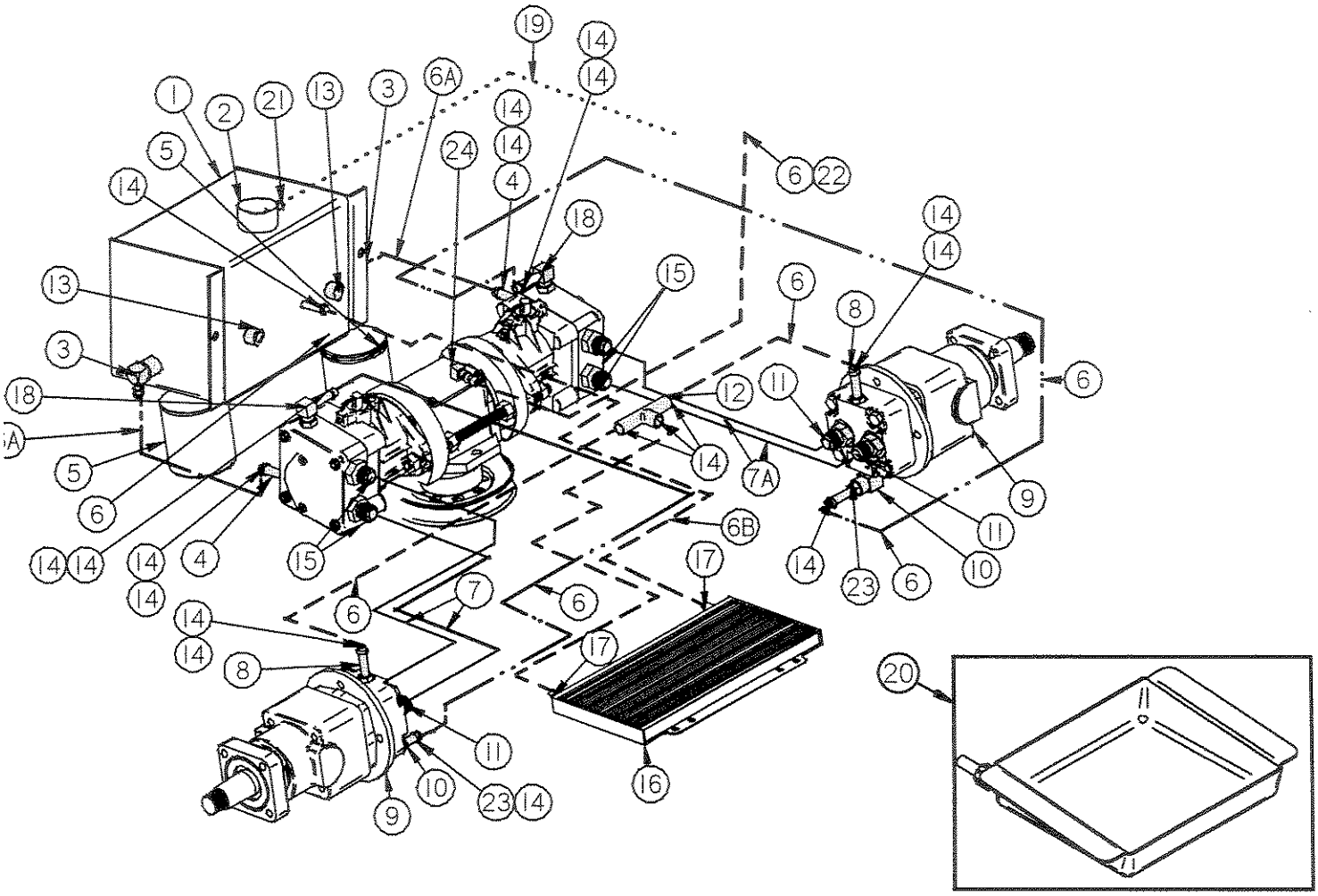

REF #	PART #	DESCRIPTION	QTY.
1	200008	Hydraulic Tank and Cap	1
2	40117-C	Oil Cap	
3	60125	90 - 3/8" NPT x3/8" Barb	2
4	65072	Charge Pump Inlet Fitting	2
5	68140	Filter - Hydro Zinga 40 Micron	2
6	65108	3/8" Clear Hose	/ft
6A	200027	3/8" Black Ribbed Hose (**Exterior Braided**)	/ft
6B	60109	3/8" Black Hose	/ft
7	65073	High Pressure Black Hydro Hose Left Side (X2503, XG2703)	4
		(XWF2700)	2
7A	65074	High Pressure Black Hydro Hose Right Side (XWF2700)	2
8	67016	1/4" Oring x 3/8" Barb	2
9	67114	Wheel Motor - 14 Cu. In.	2

REF #	PART #	DESCRIPTION	QTY.
10	67017	90 - degree fitting	2
11	87104	Steel Fitting	4
12	67008	3/8" Tee	1
13	65009	3/8" Pipe Plug	1
14	67013	3/8" Clamps	18
15	65004	High Pressure Port Fitting	4
16	60103-L	Oil Cooler	1
17	68231	#4 Micro Hose Clamp	2
18	67015	90 degree fitting	2
19	97374	5/16" Black Hose	/ft
20	900018	**Optional** - Drain Pan for Hydro Filter	
21	72012	5/16" Clamp	1
22	28534	T-Box Plug	1
23	67014	Brass Fitting	2
24	68031	1/8" x 3/8" 90 Deg. Brass Fitting	1

www.mymowerparts.com

For Dixie Chopper Discount Parts Call 606-678-9623 or 606-561-4983

DIXIE CHOPPER

SP2800EFI HYDRAULIC HOSE DIAGRAM

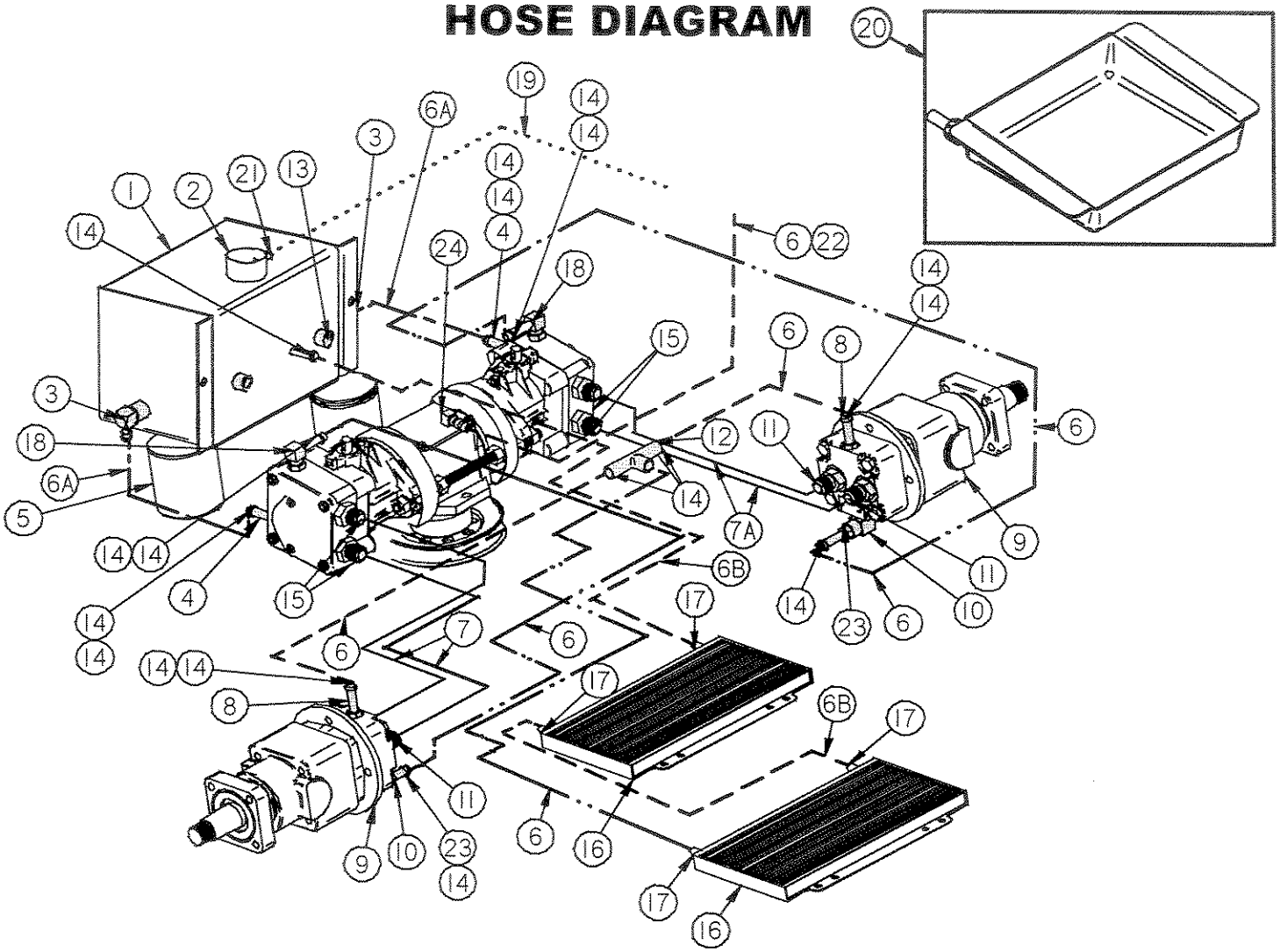

REF #	PART #	DESCRIPTION	QTY.
1	200008	Hydraulic Tank and Cap	1
2	40117-C	Oil Cap	
3	60125	90 - 3/8" NPT x3/8" Barb	2
4	65072	Charge Pump Inlet Fitting	2
5	68140	Filter - Hydro Zinga 40 Micron	2
6	65108	3/8" Clear Hose	/ft
6A	200027	3/8" Black Ribbed Hose (**Exterior Braided**)	/ft
6B	60109	3/8" Black Hose	/ft
7	65073	High Pressure Black Hydro Hose Left	2
7A	65074	High Pressure Black Hydro Hose Right	2
8	67016	1/4" Oring x 3/8" Barb	2
9	67114	Wheel Motor - 14 Cu. In.	2
10	67017	90 - degree fitting	2

REF #	PART #	DESCRIPTION	QTY.
11	87104	Steel Fitting	4
12	67008	3/8" Tee	1
13	65009	3/8" Pipe Plug	1
14	67013	3/8" Clamps	18
15	65004	High Pressure Port Fitting	4
16	60103-L	Oil Cooler	2
17	68231	#4 Micro Hose Clamp	4
18	67015	90 degree fitting	2
19	97374	5/16" Black Hose	/ft
20	900018	**Optional** - Drain Pan for Hydro Filter	
21	72012	5/16" Black Clamp	1
22	28534	T-Box Plug	1
23	67014	Brass Fitting	2
24	68031	1/8" x 3/8" 90 Deg. Brass Fitting	1

www.mymowerparts.com

For Dixie Chopper Discount Parts Call 606-678-9623 or 606-561-4983

DIXIE CHOPPER

XT3200

HYDRAULIC HOSE DIAGRAM

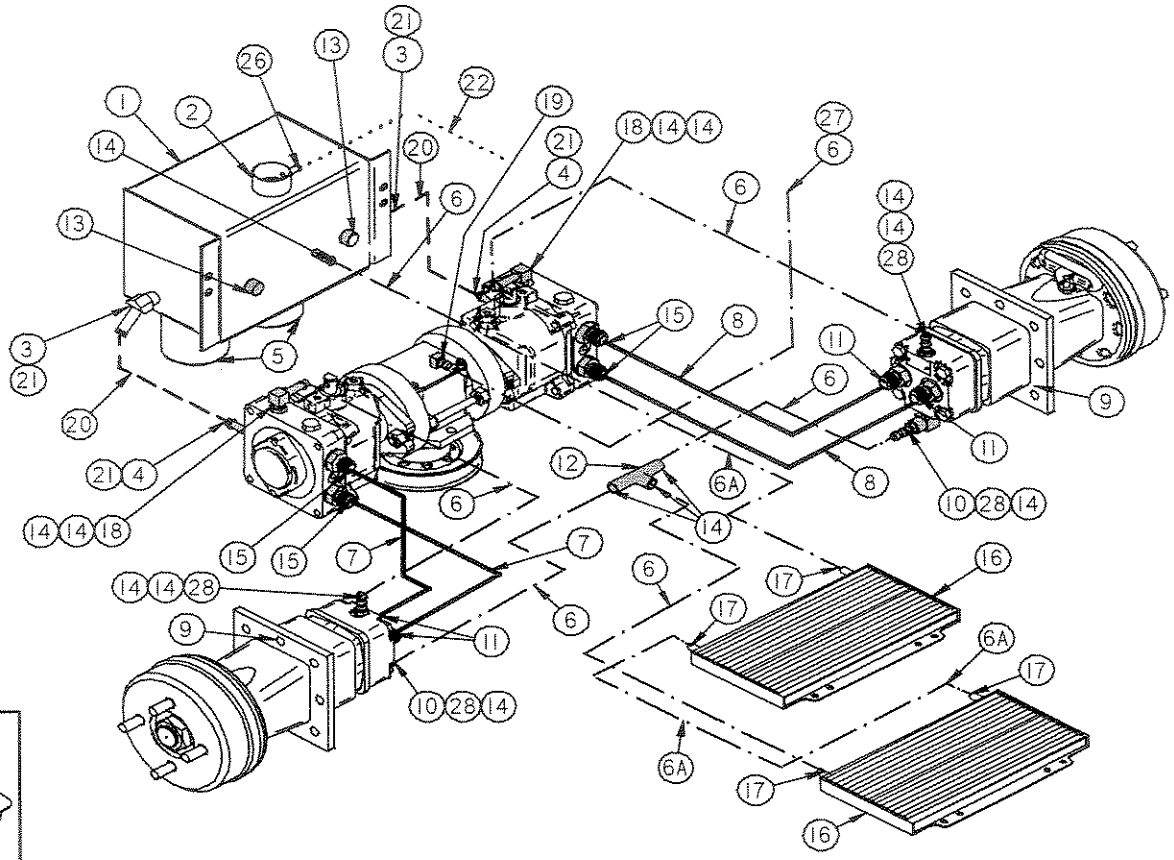

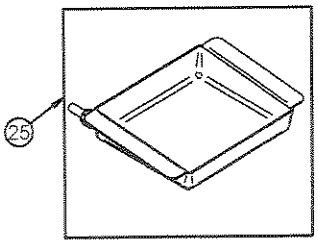

REF #	PART #	DESCRIPTION	QTY.
1	200008	Hydraulic Tank and Cap	1
2	40117-C	Oil Cap	
3	200048	45 Deg. 3/8"x1/2" Bead Fitting	2
4	72016	Straight 1/2"x1/2" Fitting	2
5	68140	Filter - Hydro Zinga 40 Micron	2
6	65108	3/8" Clear Hose	/ft.
6A	60109	3/8" Black Hose	/ft.
7	65073	High Pressure Black Hydro Hose Left	2
8	65074	High Pressure Black Hydro Hose Right	2
9	200018	Wheel Motor - 18 Cubic In. w/brake	2
10	67017	90 - Degree Fitting	2
11	87104	Steel Fitting	4
12	67008	3/8" Tee	1

REF #	PART #	DESCRIPTION	QTY.
13	65009	3/8" Pipe Plug	1
14	67013	3/8" Clamps	14
15	65004	High Pressure Port Fitting	4
16	60103-L	Oil Cooler	2
17	68231	#4 Micro Hose Clamp	4
18	67015	90 Degree Fitting	2
19	68031	T-Box Fitting (Brass)	1
20	200025	1/2" Black Ribbed Hose (Exterior Braided)	/ft.
21	97098	1/2" Clamp	4
22	97374	5/16" Black Hose	/ft.
25	900018	Optional - Drain Pan for Hydro Filter	
26	72012	5/16" Clamp	1
27	28534	T-Box Plug	1
28	67014	Brass Fitting	4

www.mymowerparts.com

For Dixie Chopper Discount Parts Call 606-678-9623 or 606-561-4983

DIXIE CHOPPER

X2503, XG2703
BODY

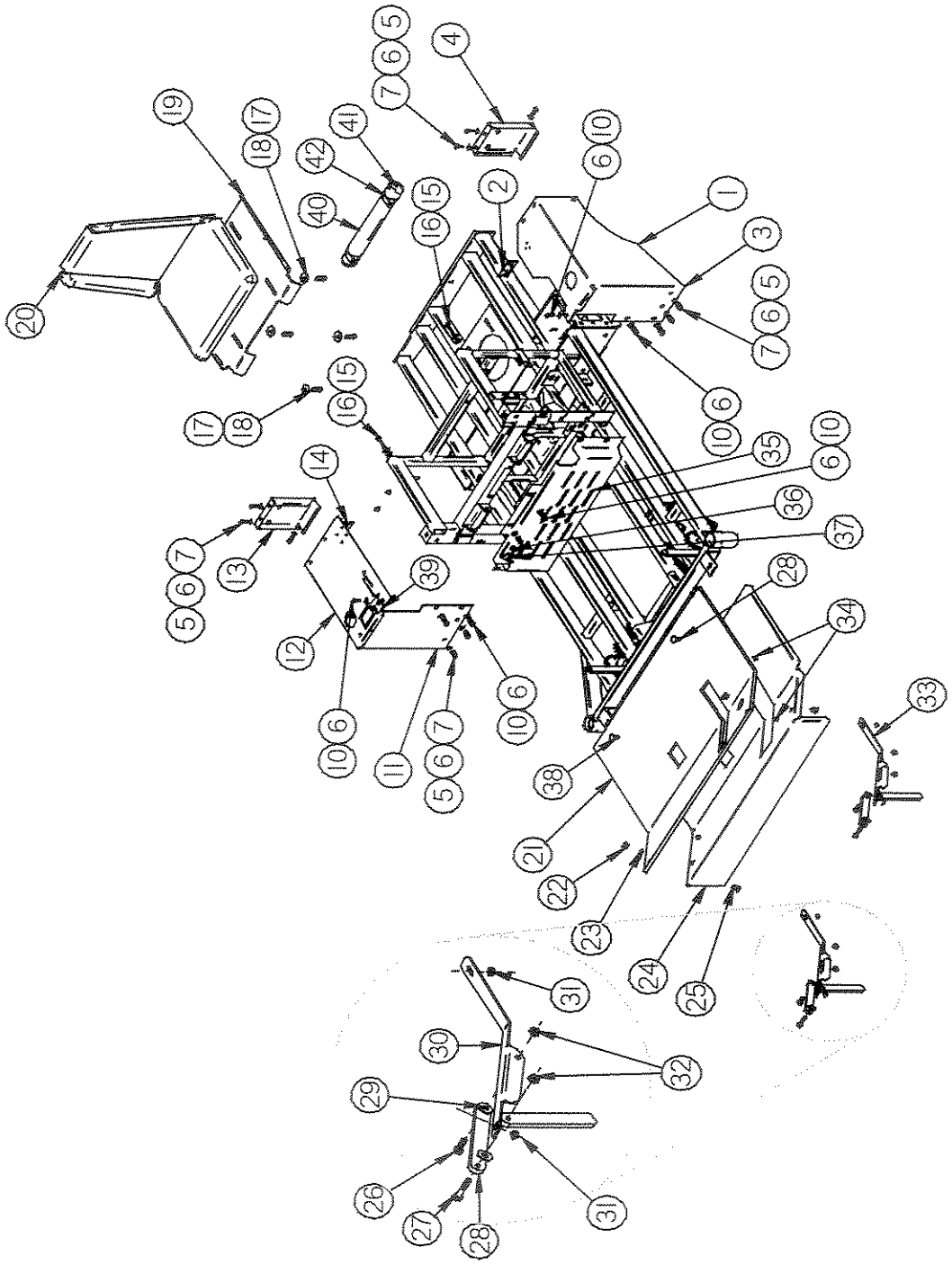

www.mymowerparts.com

For Dixie Chopper Discount Parts Call 606-678-9623 or 606-561-4983

DIXIE CHOPPER
X2503, XG2703
BODY

REF #	PART #	DESCRIPTION	QTY.
1	400001	Fender - 3Gal. Low Ride Left	1
2	400035	Left Fender Mounting Tab	1
3	400029	Left Front 3 Gal. Fuel Tank Support Bracket	1
4	400031	Left Rear 3 Gal. Fuel Tank Support Bracket	1
5	B-103	1/4"-20x1/2" Stainless Bolt	10
6	W-153	1/4" Stainless Flat Washer	18
7	N-101	1/4"-20 Stainless Whiz Flange Nut	10
10	B-209	1/4"-20X3/4" Stainless Bolt	8
11	400030	Right Front 3 Gal. Fuel Support Tank Bracket	1
12	400002	Fender - 3Gal. Low Ride Right	1
13	400032	Right Rear 3Gal. Fuel Support Bracket	1
14	400036	Right Fender Mounting Tab	1
15	B-105	5/16"-18x1 3/4" Bolt	2
16	W-113	5/16" Standard Flat Washer	6
17	B-131	5/16"-18x1" Grade 5 Bolt	4
18	W-118	5/16" Fender Flat Washer	4
19	400026	Seat Pan	1
20	64100-S	Seat - Small White	1
	176200	Armrest Kit F/Small White Seat **(X2503, XG2703 Armrest comes with Models.)**	1
21	20275	Grey Carpet	1
22	N-106	5/16"-18 Wing Nut	2
23	W-106	3/8" Fender Washer	2

REF #	PART #	DESCRIPTION	QTY.
24	67268	Floor Pan	1
25	B-104	5/16"-18x3/4" Carriage Bolt	2
26	B-131	5/16"-18x1" Grade 5 Bolt	2
27	B-174	5/16"-18x1 1/4" Bolt	2
28	400007	Connecting Arm	2
29	W-125	3/8" Plastic Washer	4
30	400006	Floor Pan Mounting Bracket (Right)	1
31	N-176	1/4"-20 Nylon Lock Nut	4
32	N-131	5/16"-18 Nylon Lock Nut	4
33	400005	Floor Pan Mounting Bracket (Left)	1
34	B-157	1/4"-20x1/2" Carriage Bolt	4
35	400077	Stainless Steel Front Panel	1
36	20248	Choke	1
37	20245	Ignition Switch	1
38	C-111	Plastic cap For Floor Pan	2
39	68247	Hourmeter Bracket	1
40	900016	Docu-Tube (Clear Tube)	1
41	900017	Cap - Soft Vinyl (Red)	2
42	C-109	Tie Strap & Clip **(F/Tube)**	2
	400064	3 Gal. Cooler Kit **(Optional)** **1 Bracket, 1 Cooler, 2 Decal**	
	400063	3 Gal. Cooler Bracket **(Optional)** **Incl. 1 Decal Part # 800048**	
	400060	Igloo Cooler **(Optional)** **Incl. 1 Decal Part # 800050**	

www.mymowerparts.com

For Dixie Chopper Discount Parts Call 606-678-9623 or 606-561-4983

DIXIE CHOPPER

XWF2700, SP2800EFI, XT3200

BODY

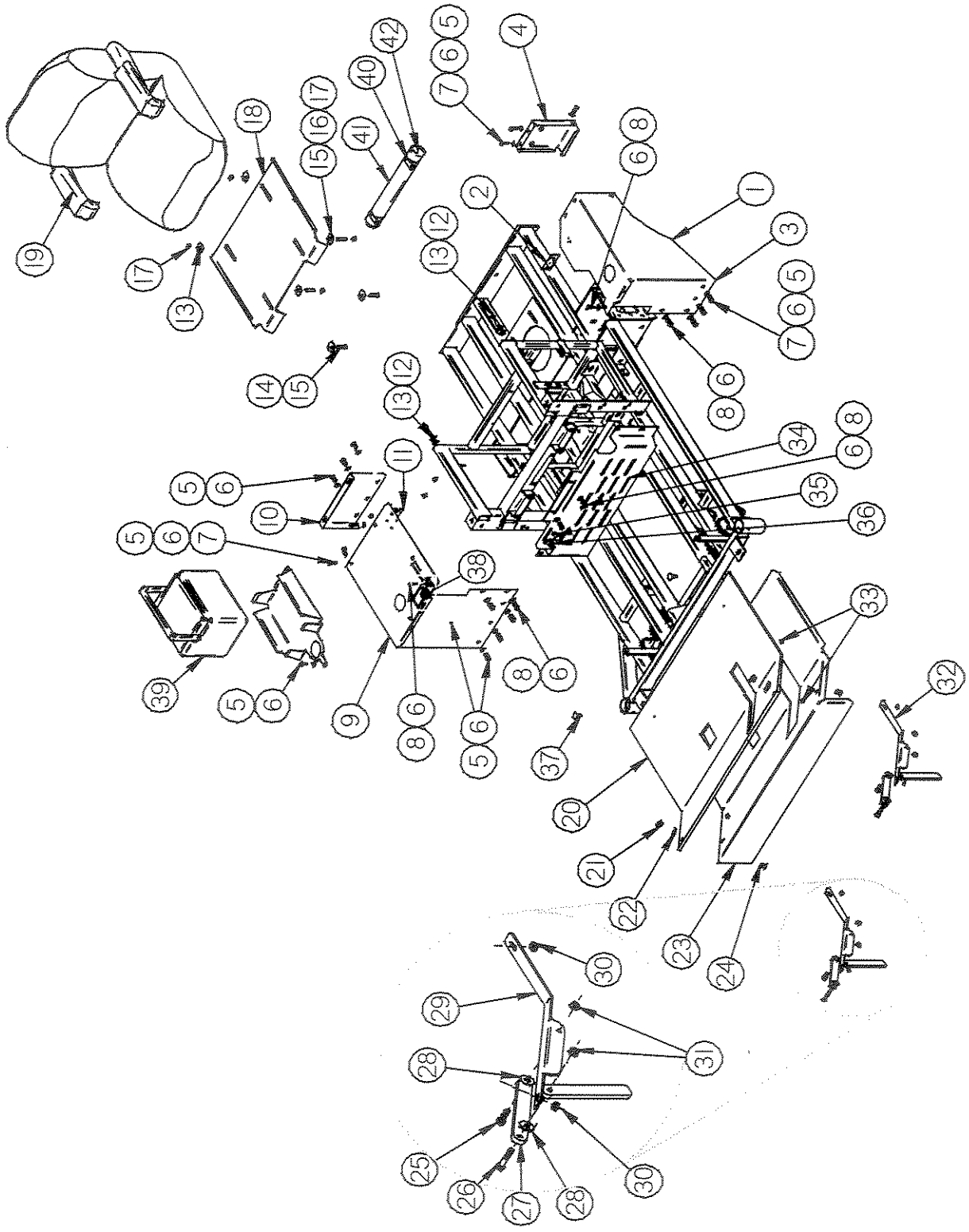

www.mymowerparts.com

For Dixie Chopper Discount Parts Call 606-678-9623 or 606-561-4983

DIXIE CHOPPER
XWF2700, SP2800EFI, XT3200
BODY

REF #	PART #	DESCRIPTION	QTY.
1	400001	Fender - 3Gal. Low Ride Left	1
2	400035	Left Fender Mounting Tab	1
3	400029	Left Front 3 Gal. Fuel Tank Support Bracket	1
4	400031	Left Rear 3 Gal. Fuel Tank Support Bracket	1
5	B-103	1/4"-20x1/2" Stainless Bolt	17
6	W-153	1/4" Stainless Flat Washer	25
7	N-101	1/4"-20 Stainless Whiz Flange Nut	9
8	B-209	1/4"-20X3/4" Stainless Bolt	8
9	400004	Fender - 7 Gal. Low Ride Right	1
10	400034	Right Rear 7Gal. Fuel Tank Support Bracket	1
11	400036	Right Fender Mounting Tab	1
12	B-105	5/16"-18x1.75" Bolt	2
13	W-113	5/16" Flat Washer	6
14	B-131	5/16"-18x1 Bolt	2
15	W-118	5/16"x1.5" Fender Washer	4
16	S-115	5/16"-18x1.75" Stud	2
17	N-103-W	5/16"-18 Whiz Flange Nut	4
18	400026	Seat Pan	1
19	40100-W	Seat (Complete)	1
	176801	Armrest Kit (L & R)	
	176803	Left Arm	
	176802	Right Arm	
	176201	Arm Pad (L or R)	
	306025	Back Cover	
	305839	Cushion Cover	
	177827PS	Spring Kit	
	400078	Gee- Ride - Seat Cover Back	

REF #	PART #	DESCRIPTION	QTY.
20	20275	Grey Carpet	1
21	N-106	5/16"-18 Wing Nut	2
22	W-106	3/8" Fender Washer	2
23	67268	Floor Pan	1
24	B-104	5/16"-18x3/4" Carriage Bolt	2
25	B-131	5/16"-18x1" Bolt	2
26	B-174	5/16"-18x1 1/4" Bolt	2
27	400007	Connecting Arm	2
28	W-125	3/8" Plastic Washer	4
29	400006	Floor Pan Mounting Bracket (Right)	1
30	N-176	1/4"-20 Nylon Lock Nut	4
31	N-131	5/16"-18 Nylon Lock Nut	4
32	400005	Floor Pan Mounting Bracket (Left)	1
33	B-157	1/4"-20x1/2" Carriage Bolt	4
34	400077	Stainless Steel Front Panel	1
35	20248	Choke	1
36	20245	Ignition Switch	1
37	C -111	Cap - Floor Pan Christmas Tree	2
38	68247	Hourmeter Bracket	1
39	400056	7 Gal. Cooler Kit **Only XT (1) Bracket (1) Cooler (2) Decal**	
	400057	7 Gal. Cooler Bracket **(Optional)** **Incl. (1) Decal Part # 800048**	
	400060	Igloo Lunch Cooler **(Optional)** **Incl. (1) Decal Part # 800050**	
40	C-109	Tie Strap & Clip	2
41	900016	Docu-Tube (Clear Tube)	1
42	900017	Cap - Soft Vinyl (Red)	2

www.mymowerparts.com

For Dixie Chopper Discount Parts Call 606-678-9623 or 606-561-4983

DIXIE CHOPPER

THROTTLE ASSEMBLY

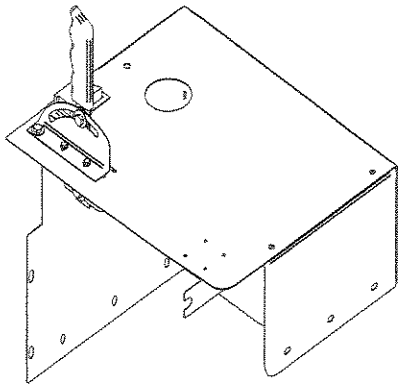

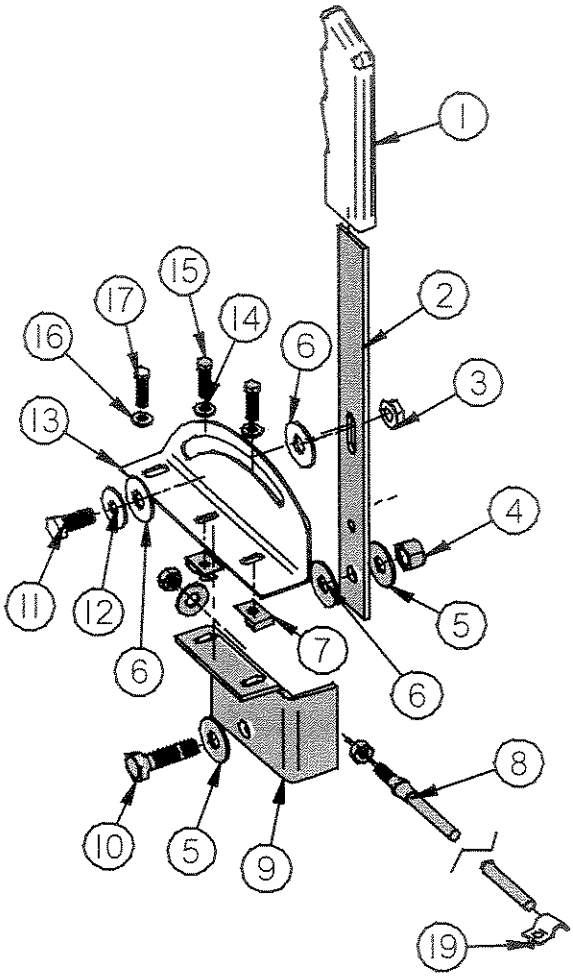

REF #	PART #	DESCRIPTION	QTY.
	68250	Complete Throttle Assembly F/ Kohler, Guardian 2,5 - 11,15,16	
1	67258	Handle Grip (Black)	1
2	97012 600062	Offset Throttle Handle (F/2003 & Older) Handle - Throttle F/all Models	1
3	N-134	5/16" Flange Lock Nut	1
4	N-107	3/8" -16 Nyloc Nut	1
5	W-104	3/8" Standard Flat Washer	2
6	W-125	3/8" Nylon Washer	3
7	C-105	Clip Nut	2
8	68249	Throttle Cable	1
		Washer	2
		Hex Nut	2
	68249-K	Throttle Handle & Cable Kit (F/2003 & Older)	

REF #	PART #	DESCRIPTION	QTY.
9	97011	Lower Throttle Mounting Bracket	1
10	B-108	3/8"-16 x1" Bolt	1
11	B-107	5/16"-18 x 3/4" Bolt	1
12	W-113	5/16" Flat Washer	1
13	65270	Upper Stainless Throttle Bracket	1
14	W-152	#10 Stainless Washer	2
15	B-203	10-24x3/4" Stainless Bolt	2
16	W-153	1/4" Stainless Flat Washer	1
17	B-209	1/4"-20x3/4" Bolt	1
18	C-107	Clamp - Kohler	1
		Guardian	2

www.mymowerparts.com

For Dixie Chopper Discount Parts Call 606-678-9623 or 606-561-4983

DIXIE CHOPPER

X2503, XG2703, XWF2700, XT3200
FUEL SYSTEM

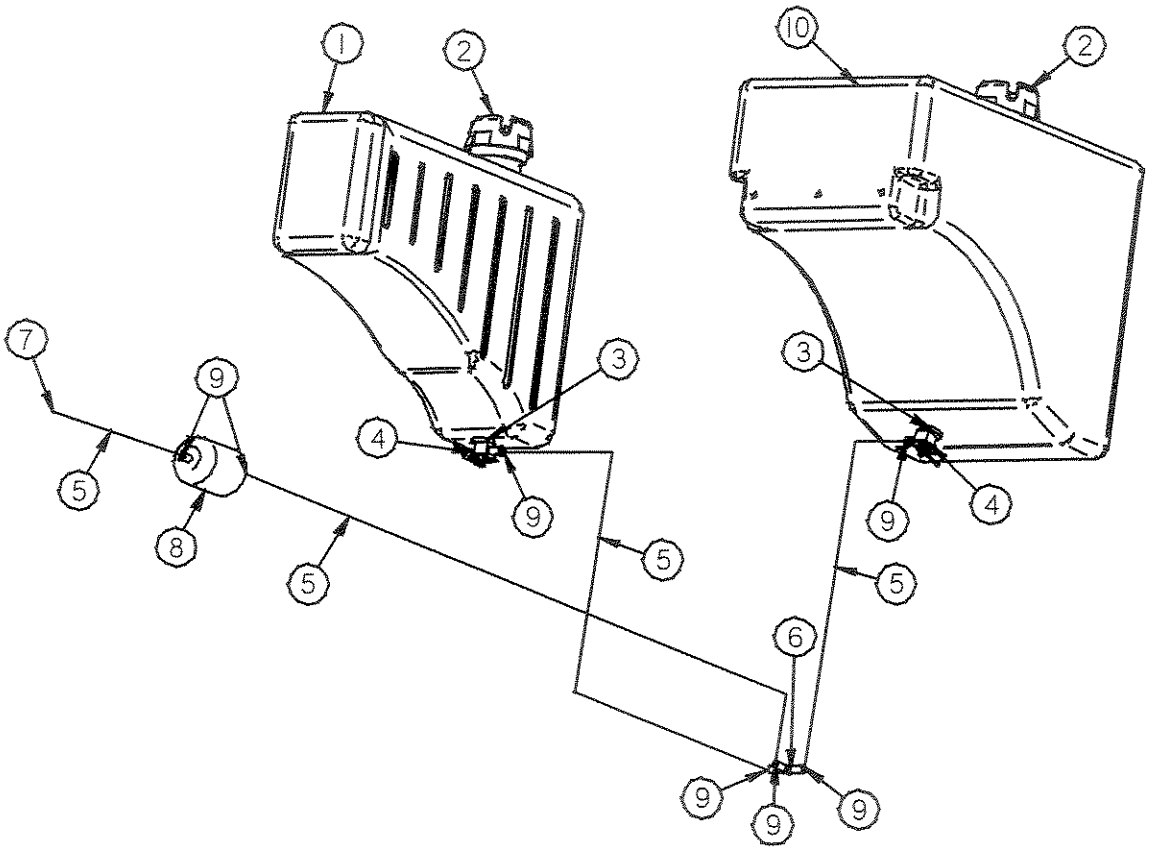

REF #	PART #	DESCRIPTION	QTY.
1	40204-1	3 Gal. Fuel Tank **(Except XWF2700, XT3200)**	2
2	600035 40117-1	Fuel Cap Fuel Cap - Manual Vent w/Guage **(Optional)**	2
3	40220	Fuel Tank Bushing	2
4	400016	Valve - Fuel Tank Shut-Off	2
5	97374	Gas Line - 5/16"	/ft.

REF #	PART #	DESCRIPTION	QTY.
6	65008 97362	Gas Line "T" - 5/16" Gas Line "Y" - 5/16"	1
7	68231	Hose Clamp	1
8	97392 0F0106	Filter - Gas & Water Parker Gas Filter **(XT3200)**	1
9	72012	Spring Clamp (Black)	7
10	400015	7 Gal. Fuel Tank **(XWF2700, XT3200 Only)**	1

www.mymowerparts.com

For Dixie Chopper Discount Parts Call 606-678-9623 or 606-561-4983

DIXIE CHOPPER

SP2800EFI
FUEL SYSTEM

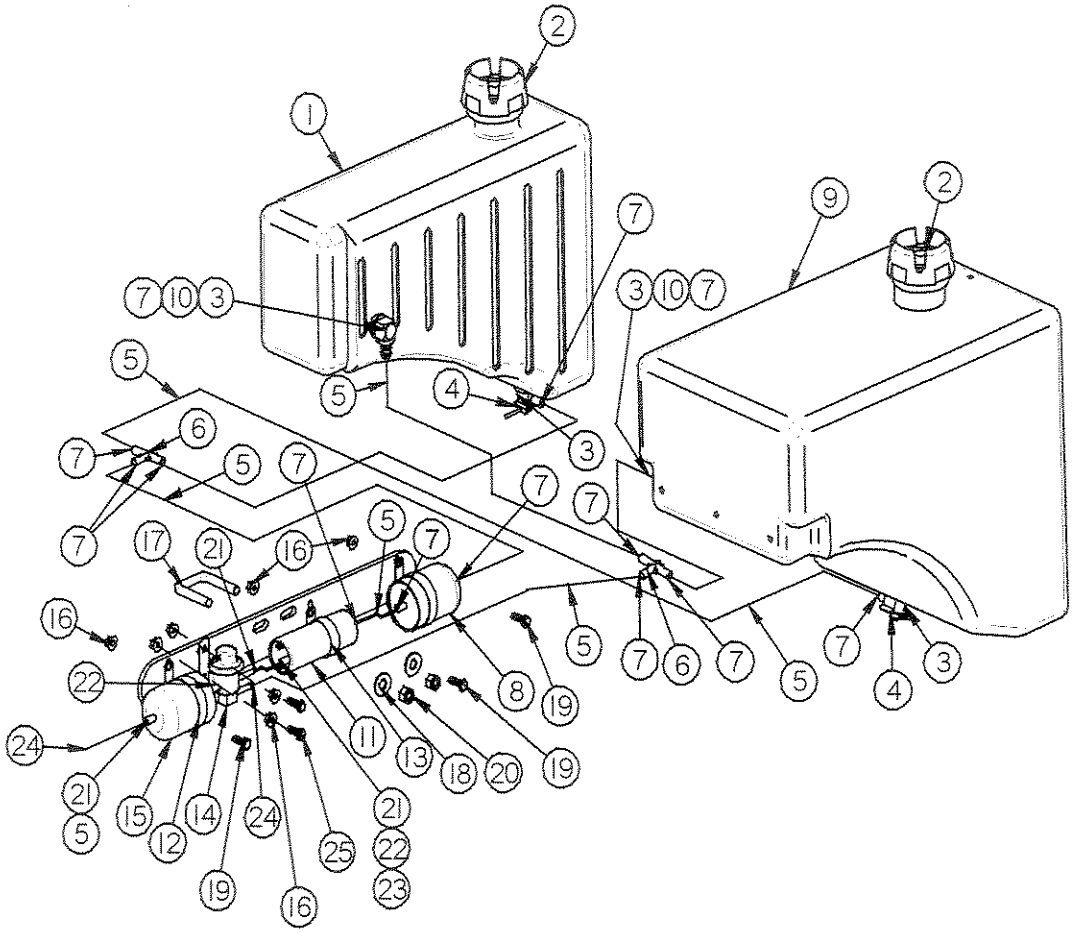

REF #	PART #	DESCRIPTION	QTY.
1	40204-1	3 Gal. Fuel Tank	1
2	600035 40117-1	Fuel Cap Fuel Cap - Manual Vent w/Guage (**Optional**)	2
3	40220	Fuel Tank Bushing	4
4	400016	Valve - Fuel Tank Shut-Off	2
5	97374	Gas Line Hose - 5/16"	/ft.
6	65008 97362	TEE - 5/16x 5/16 x 5/16 Gas Line "Y" - 5/16"	2
7	72012	Spring Clamp (Black)	13
8	97392	Filter - Gas & Water Parker	1
9	400015	7 Gal. Fuel Tank	1
10	72218	Fititing 1/8MP x 5/16 90'	2
11	N/A	Kohler Part - (Pump)	1
12	C-108	Clamp	2

REF #	PART #	DESCRIPTION	QTY.
13	C-110	Clamp	1
14	N/A	Kohler Part - (Regulator)	1
15	N/A	Kohler Part - (Filter)	1
16	N-102	1/4"-20 Whiz Flange Nut	7
17	B-206	3/8"-16x1 3/8"w x 2"L U-Bolt	1
18	W-104	3/8" Flat Washer	2
19	B-102	1/4"-20x3/4" Bolt	3
20	N-107	3/8"-16 Nylon Lock Nut	2
21	600029	Clamp	6
22	500005	Ground Wire - (F/ Fuel P.)	1
23	N-182	#8-32 Hex Nut w/Star Lock Washer (For Fuel Pump)	2
24	68231	Clamp	2
25	B-172	1/4"-20x1" Bolt	2

www.mymowerparts.com

For Dixie Chopper Discount Parts Call 606-678-9623 or 606-561-4983

DIXIE CHOPPER

X2503, XWF2700, XG2703, SP2800EFI, XT3200
DUAL BRAKE ASSEMBLY

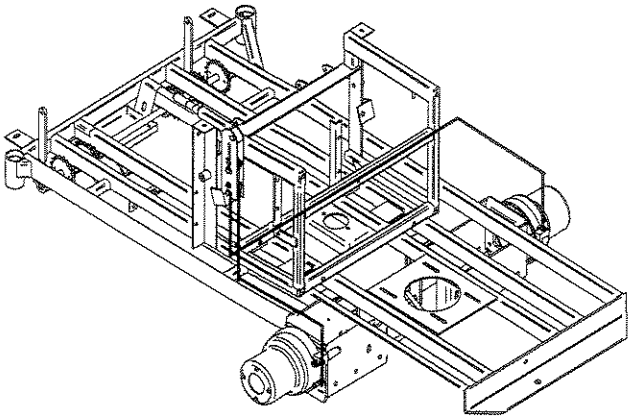

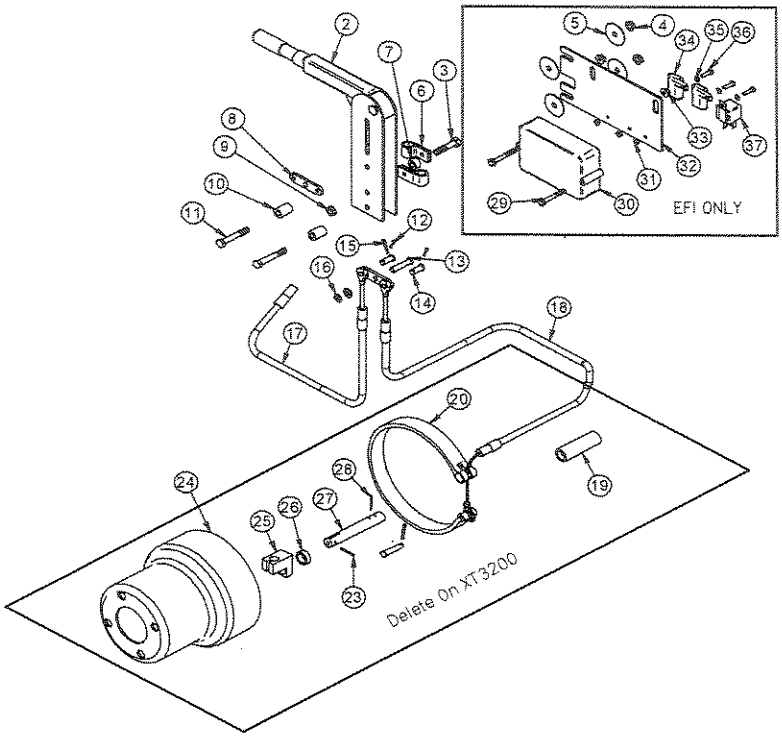

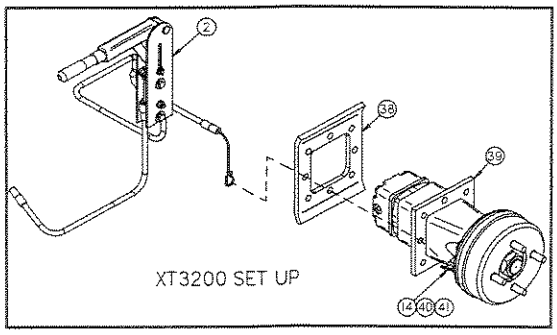

REF #	PART #	DESCRIPTION	QTY.
1	N/A	Complete Brake Assembly	
2	97094	Brake Handle Assembly (Inc. #2 - #18)	1
3	N/A	Bolt	1
4	N-134	Nut	2
5	W-106	Washer	4
6	65061	R Clip	2
7	65063	Spacer	1
8	65060	Pivot Plate	2
9	N/A	Nut	1
10	65062	Spacer	2
11	B-156	Bolt	2
12	N/A	Hairpin Cotter	2
13	P-129	Pin	1
14	P-112	Pin	2
15	N/A	Hairpin Cotter	1
16	W-102	Flat Washer	2
17	65247	Right Brake Cable (Long)	1
18	65246	Left Brake Cable (Short)	1
19	65277	Bushing (Welded on Frame)	2
20	65244	Brake Band	2
21	P-108	Hairpin Cotter	2
22	P-102	3/8" x 1 1/4" Clevis Pin	2

REF #	PART #	DESCRIPTION	QTY.
23	P-100	3/16" x 1" Roll Pin	2
24	67266	Brake Drum	2
25	991100025	Brake Cable Retainer	2
26	65278 65284 30112	Spacer Use # 65278 and #30112 or # 65284 to *place brake band fully onto brake drum.*	
27	65243	Brake Pin	2
28	P-118	3/16" x 1 1/2" Roll Pin	2
29	B-257	1/4"-20x1.75" Bolt	2
30	N\A	Kohler Part - EFI Module	1
31	N-179	M5-.8 Hex Nut	3
32	600009	EFI Module Mount	1
33	N-102	1/4"-20 Whiz Flange Nut	2
34	N/A	Fuse Holder	2
35	W-175	M5 Standard Flat Washer	3
36	B-258	M5-.8x16mm Bolt	3
37	N\A	Relay	1
38	200016	Wheel Motor Face Plate	
39	200018	18 Cu. In. Wheel Motor w/Brake	
40	W-102	1/4" Flat Washer	
41	P-117	1/8"x2" Cotter Pin	

www.mymowerparts.com

For Dixie Chopper Discount Parts Call 606-678-9623 or 606-561-4983

DIXIE CHOPPER

X2503

ENGINE - KOHLER 25 Hp

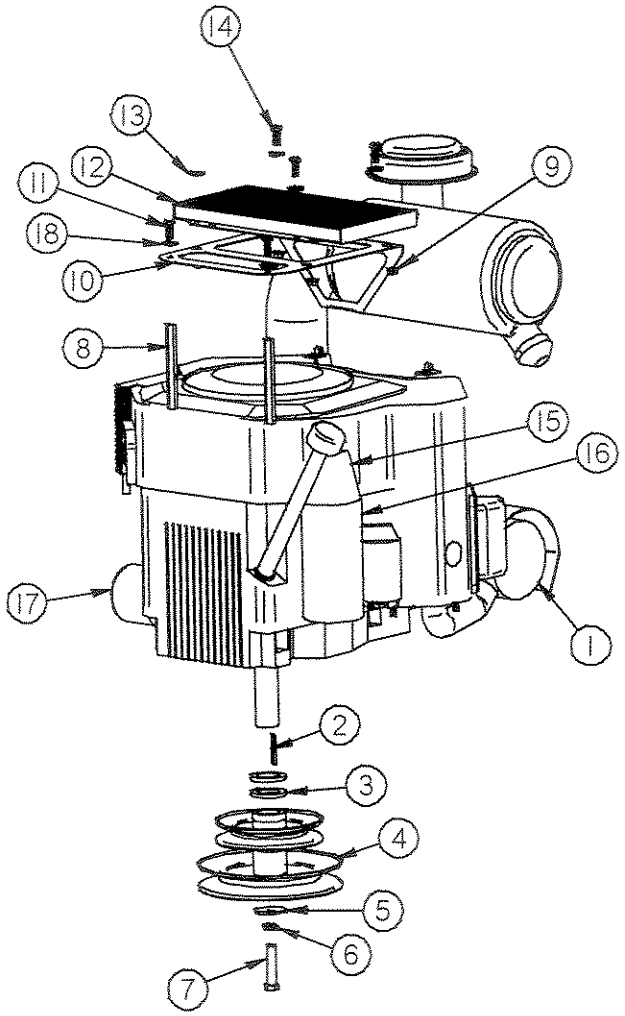

REF #	PART #	DESCRIPTION	QTY.
1	600065	Kit - Muffler Hp Plus One - 25Hp	1
	600011	Muffler	
	600059	Tailpipe	
	600060	Clamp	
2	K-100	1/4" Key	1
3	W-145	1 1/8" x 1 3/4" x 1/8" Washer	2
4	9907500X600D	Split Pulley 5" x 6"	1
5	W-144	7/16" Belleville Washer	1
6	W-108	7/16" Lock Washer	1
7	B-114	7/16"-20x3/4" Bolt	1

REF #	PART #	DESCRIPTION	QTY.
8	600016	Bolt - 1/2" x 3 1/2" Hex Kohler Oil Cooler	2
9	N-102	1/4"-20 Whiz Flange Nut	4
10	400017	Bracket - Kohler Oil cooler	1
11	B-103	1/4"-20x1/2" Stainless Bolt	2
12	60103-L	Oil Cooler	1
13	W-102	1/4" Flat Washer	4
14	B-101	1/4"-20x1/2" Bolt	4
15	C-113	Horn Clamp	1
16	C-112	Mercury Switch Clamp	1
17	277233	Oil Filter	
18	W-153	1/4" Stainless Washer	2

www.mymowerparts.com

For Dixie Chopper Discount Parts Call 606-678-9623 or 606-561-4983

DIXIE CHOPPER

XWF2700, SP2800EFI ENGINE 27Hp, 28Hp

KOHLER

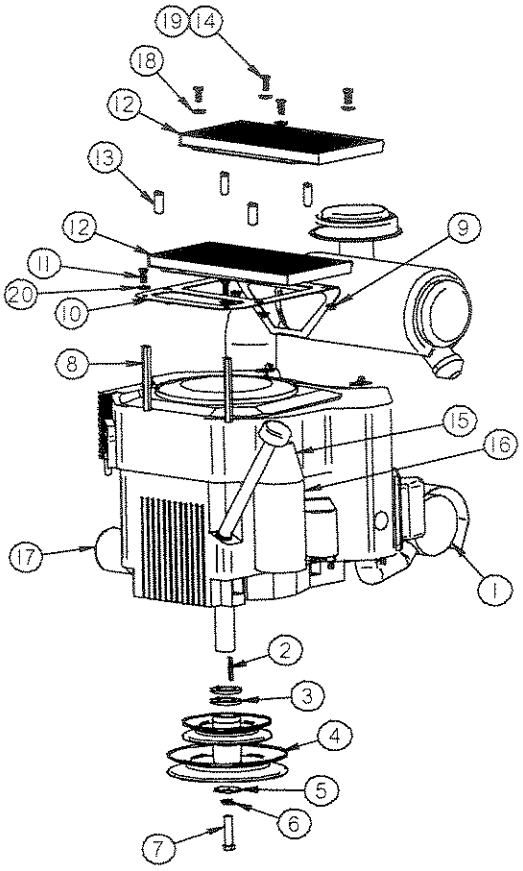

REF #	PART #	DESCRIPTION	QTY.
1	600065	Kit - Muffler - Hp Plus One - 27Hp **(Muffler, Tailpipe, Clamp)**	1
	600011	Muffler - Kohler 27Hp	
	600066	Kit - Muffler - Hp Plus One - 28HpEFI **(Muffler, Tailpipe, Clamp)**	1
	600018	Muffler - EFI Kohler 28Hp	
	600059	Tailpipe **(27 & 28Hp)**	
	600060	Clamp **(27 & 28Hp)**	
2	K-100	1/4" Key	1
3	W-145	1-1/8" x 1-3/4" x 1/8" Washer	2
4	9907500X600D	Split Pulley 5" x 6"	1
5	W-144	7/16" Belleville Washer	1
6	W-108	7/16" Lock Washer	1
7	B-114	7/16"-20 x .750" Bolt	1

REF #	PART #	DESCRIPTION	QTY.
8	600016	Bolt - 1/2" x 4" Hex Kohler Oil Cooler	2
9	N-102	1/4"-20 Whiz Flange Nut	4
10	400017	Bracket - Kohler Oil Cooler	1
11	B-103	1/4"-20x1/2" Stainless Bolt	2
12	60103-L	Oil Cooler **(27Hp)** Oil Cooler **(28HP)**	1 2
13	200022	Spacer - F/ Oil Cooler **(F/28Hp)**	4
14	B-101	1/4" - 20 x 1/2" Bolt **(27Hp)**	4
15	C-113	Horn Clamp	
16	C-112	Mercury Switch Clamp	
17	277233	Oil Filter	
18	W-102	1/4" Flat Washer	4
19	B-267	1/4" - 20 X 2 1/4" Bolt **(F/28HP)**	4
20	W-153	1/4" Stainless Washer	2

www.mymowerparts.com

For Dixie Chopper Discount Parts Call 606-678-9623 or 606-561-4983

DIXIE CHOPPER

XWF2700, SP2800EFI
KOHLER ENGINE OIL ROUTING

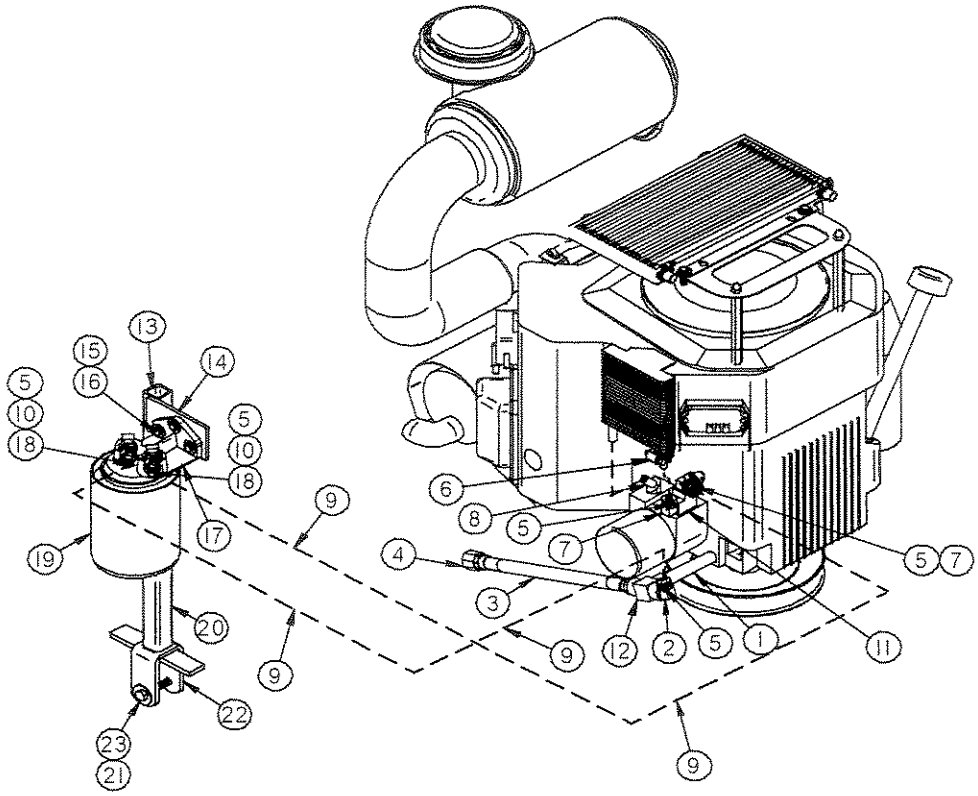

REF #	PART #	DESCRIPTION	QTY.
1	10230	3/8" Black Pipe Nipple 3" Long	1
2	60125	3/8" Male Pipe 90 To 3/8" Barb	1
3	68230	Oil Drain Hose	1
4	10231	3/8" Steel Pipe Cap	1
5	67013	3/8" Green Clamp	5
6	68231	# 4 Worm Clamp	1
7	67019	Hose Barb Brass **(27Hp Machines)** Kohler Fitting on inside Fitting **(28Hp EFI Machines)**	2
8	Kohler No	45 Deg. elb-1/4"mpx-3/8" barb	
9	60109	3/8" Oil Line	/ft.
10	60116	3/8" Swivel to 3/8" Barb	2
11	67022	1/4" Street Tee	1

REF #	PART #	DESCRIPTION	QTY
12	60102	Black Pipe Tee	1
13	68142	Plastic Cap	1
14	N-102	1/4"-20 Whiz Flange Nut	3
15	B-172	1/4"-20x1" Bolt	3
16	W-102	1/4" Washer	3
17	60122	Amsoil Filter Head	1
18	60113	1/8" x 3/8" 90 Degree Fitting	2
19	60119	Amsoil Filter	1
20	400025	Amsoil Filter Mount	1
21	B-165	3/8"-16x2" Bolt	1
22	N-107	3/8"-16 Nyloc Nut	1
23	W-104	3/8" Standard Flat Washer	1

www.mymowerparts.com

For Dixie Chopper Discount Parts Call 606-678-9623 or 606-561-4983

DIXIE CHOPPER

XT3200, XG2703

ENGINE - 27, 32Hp GUARDIAN

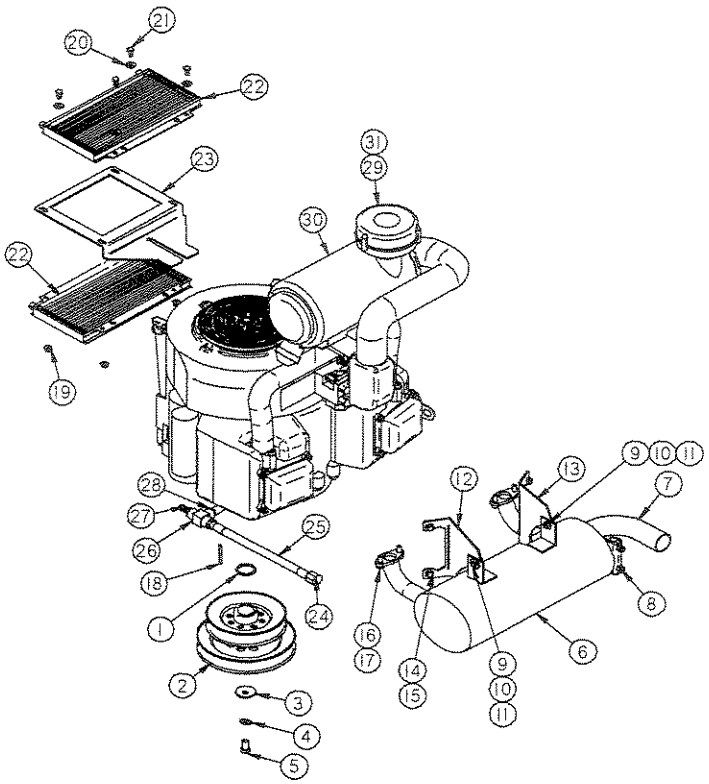

REF #	PART #	DESCRIPTION	QTY.
	600069	27Hp Guardian Engine	
	600068	32Hp Guardian Engine	
1	W-145	1 1/8" ID. X 1 3/4" OD. Flat Washer **(27Hp)**	1
	W-178	1 1/4" ID. X 1 7/8" OD. X 1/8" Thick Washer **(32Hp)**	1
2	9907500X600D	Pulley - 5x6x1 1/8" Engine **(XG2703 Only)**	1
	600033	Pulley - 5x6x1 1/4" Engine **(XT3200)**	
3	W-144	7/16" Stainless Belleville Washer	1
4	W-108	7/16" Lock Washer	1
5	B-114	7/16"-20x3/4" Bolt	1
6	600061	Kit - Guardian Muffler **(Incl. Ref. # 7-8)**	1
	600032	Muffler - Guardian	
	OC4138	Gasket - Guardian Muffler	2
7	600059	Tailpipe - Guardian Muffler	
8	600060	Clamp - Guardian Muffler Tailpipe	
9	B-107	5/16"-18x3/4" Bolt	2
10	W-113	5/16" Flat Washer	2
11	N-103-W	5/16"-18 Whiz Flange Nut	2
12	600057	Bracket - LH Muffler	1
13	600058	Bracket - RH Muffler	1
14	W-179	M6 Lock Washer	4

REF #	PART #	DESCRIPTION	QTY.
15	B-269	M6-16x1.00 Bolt	4
16	045761A	Stud - M8 - 1.25 x 10MM	4
17	052858	Nut - Lock Flange M8 - 1.25	4
18	K-100	1/4" Key	1
19	N-102	1/4"-20 Whiz Flange Nut	4
20	W-102	1/4" Washer	4
21	B-101	1/4"-20x1/2" Bolt	4
22	60103-L	Oil Cooler **(XG2700)**	1
		Oil Cooler **(XT3200)**	2
23	400105	Bracket - Oil Cooler Generac	1
24	10231	3/8" Steel Pipe Cap	1
25	68230	Oil Drain Hose Assembly	1
26	60102	3/8" Black Pipe Tee	1
27	87113	3/8" Male Pipe 3/8" Barb - Straight	1
28	72230	3/8" Black Pipe Nipple 3" Long	1
29	90115	Turbo Precleaner	1
30	0E3655	Canister - Donaldson Air Cleaner	
	0E3557	Primary Element Donaldson Air Cleaner	
	0E3656	Secondary Element Donaldson Air Cleaner	
31	90125	Clamp	1

www.mymowerparts.com

For Dixie Chopper Discount Parts Call 606-678-9623 or 606-561-4983

DIXIE CHOPPER

XT3200
GUARDIAN ENGINE OIL ROUTING

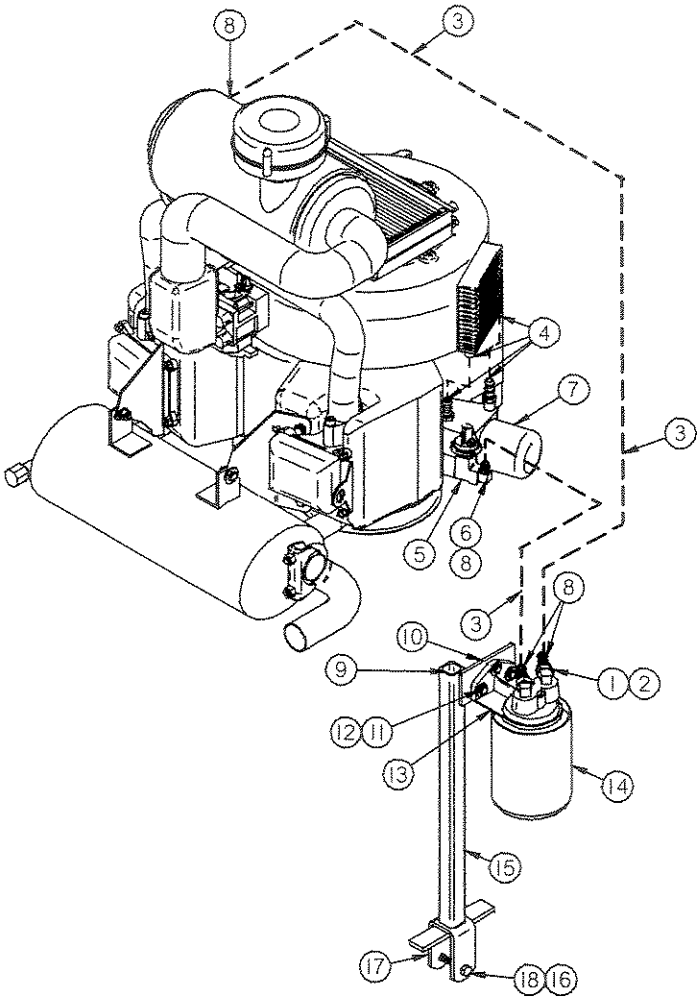

REF #	PART #	DESCRIPTION	QTY.
1	60113	1/8" x 3/8" 90Deg. Fitting	2
2	60116	3/8" Swivel to 3/8" Barb	2
3	60109	3/8" Line	/ft.
4	68231	#4 Worm Clamps	4
5	67022	1/4" Street Tee	1
6	67019	Hose Barb Brass	1
7	070185B	Oil Filter	
8	67013	Green Clamps	4
9	68142	Plastic Plug 1x1	1
10	N-102	1/4"-20 Whiz Flange Nut	3
11	B-172	1/4"-20x1" Bolt	3

REF #	PART #	DESCRIPTION	QTY.
12	W-102	1/4" Flat Washer	3
13	60112	Amsoil Filter Head	1
14	60122	Amsoil Filter	1
15	400025	Amsoil Filter Mount	1
16	B-165	3/8"-16x2" Bolt	1
17	N-107	3/8"-16 Nyloc Nut	1
18	W-104	3/8" Standard Flat Washer	1
	0F0106	Fuel Filter	
	NGK-ZFR4F-11	Guardian Spark Plug	
	0E4271	Starter	

www.mymowerparts.com

For Dixie Chopper Discount Parts Call 606-678-9623 or 606-561-4983

DIXIE CHOPPER
KOHLER ELECTRICAL DIAGRAM

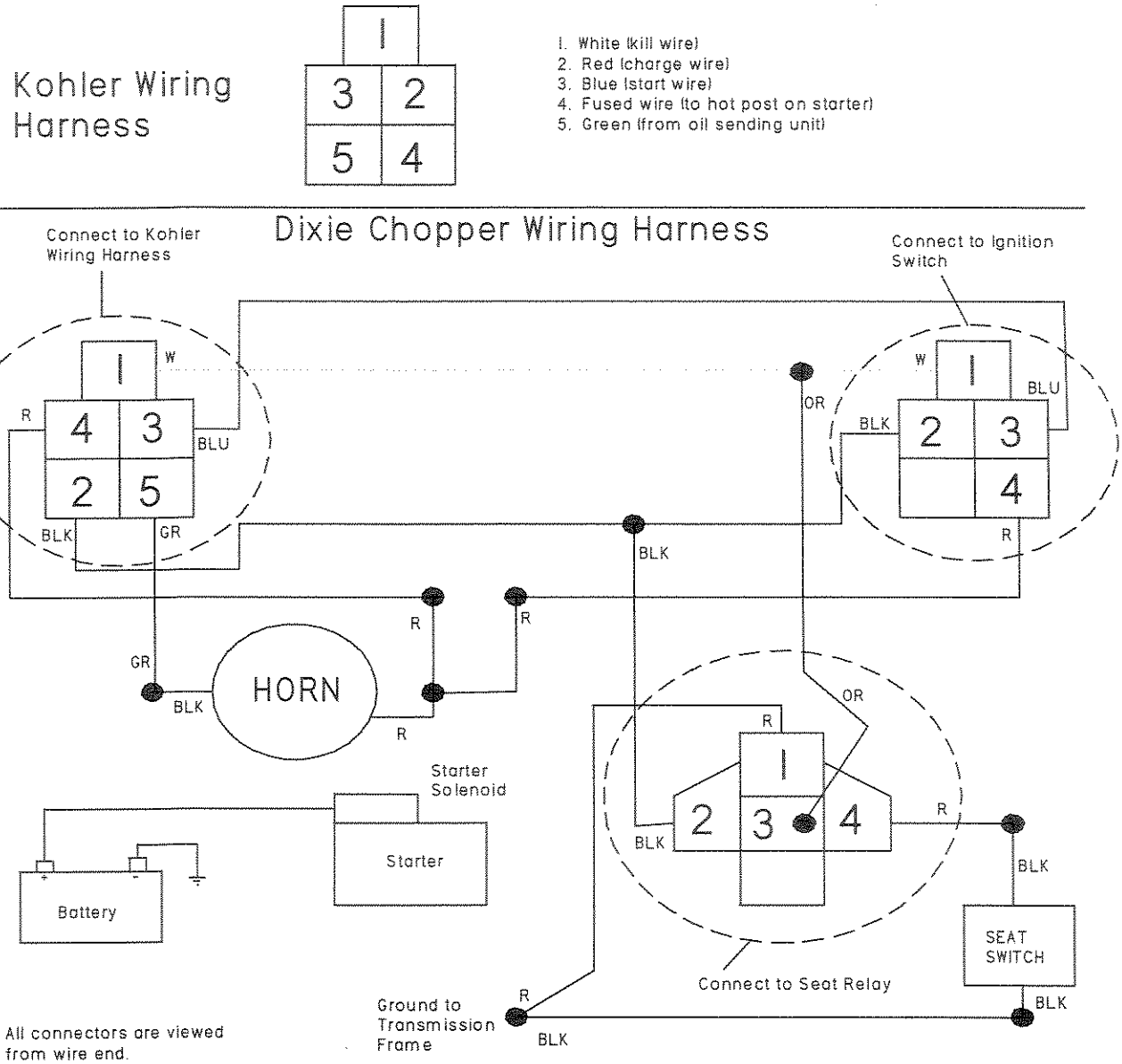

REF #	PART #	DESCRIPTION	QTY.
1	65522	Kohler Wiring Harness	1
	500030	Kohler Wiring Harness **(XWF2700)**	
2	20245	Ignition Switch	1
3	20246-T	Hour Meter/Tach	1
4	68247	Tach Bracket	1
5	N/A	Battery	1
6	20228	Battery Strap	1
7	400065	Standard Battery Box	1
8	20225-B	Red Rubber Boot	1
9	20227-72	Battery Cable Positive (72")	1

REF #	PART #	DESCRIPTION	QTY.
10	20226-B	Battery Cable Ground (12")	1
11	40229	Mercury Switch	1
12	C-112	Clamp for Mercury Switch	1
13	65510	Seat Relay	1
14	97191	Seat Relay Pigtail	1
15	65509	Fuse	1
16	20254	Fuse Holder	1
17	60117	Low Oil Horn **(Optional)**	
	C-113	Horn Clamp	

www.mymowerparts.com

For Dixie Chopper Discount Parts Call 606-678-9623 or 606-561-4983

DIXIE CHOPPER
KOHLER 28Hp EFI
ELECTRICAL DIAGRAM

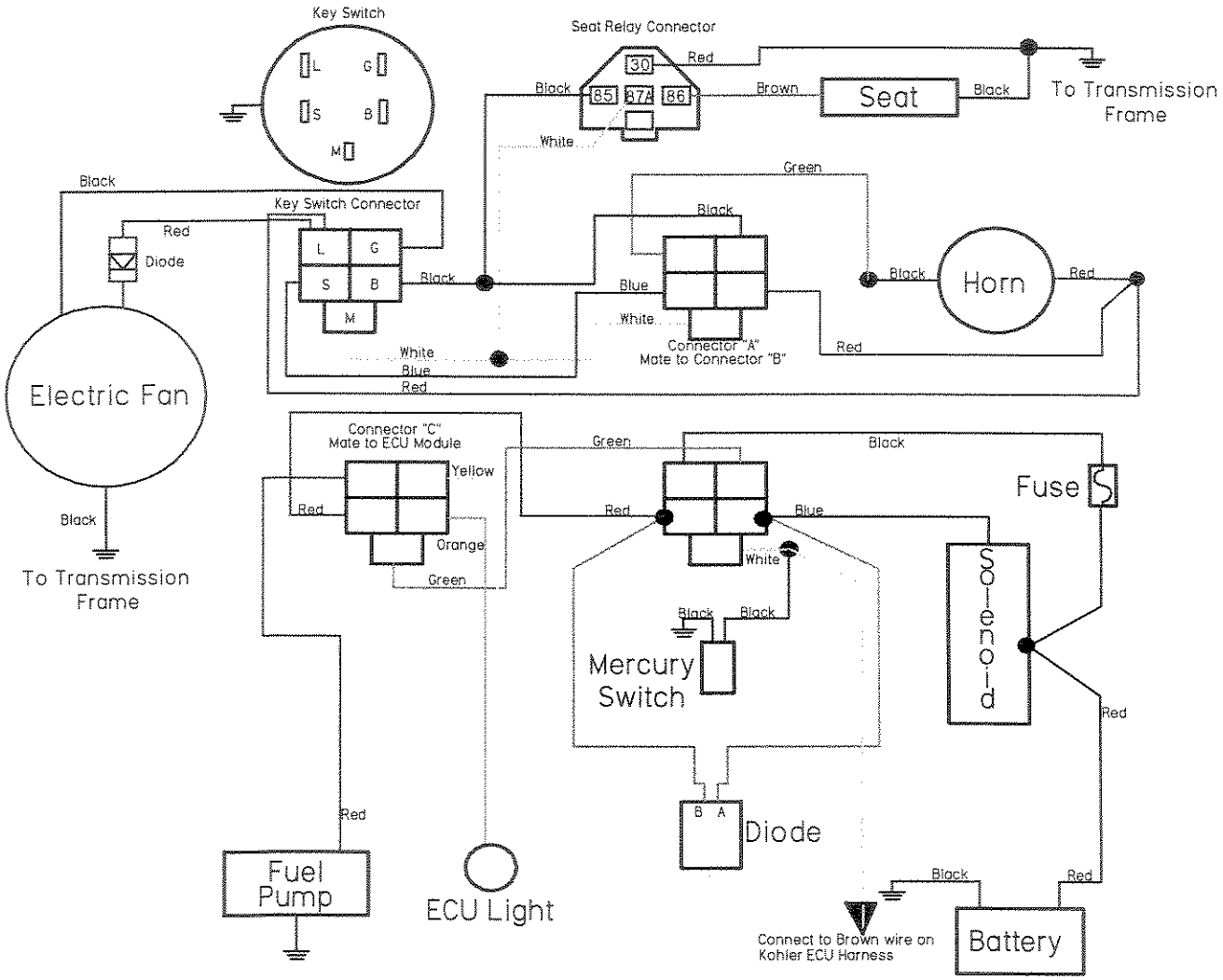

REF #	PART #	DESCRIPTION	QTY.
1	500002	Kohler 28Hp EFI Wiring Harness	1
2	20245	Ignition Switch	1
3	20246-T	Hour Meter/Tach	1
4	68247	Tach Bracket	1
5	N/A	Battery	1
6	20228	Battery Strap	1
7	400065	Standard Battery Box	1
8	20225-B	Red Rubber Boot	1
9	20227-72	Battery Cable Positive (72")	1
10	20226-B	Battery Cable Ground (12")	1

REF #	PART #	DESCRIPTION	QTY.
11	40229	Mercury Switch	1
12	C-112	Clamp for Mercury Switch	1
13	65510	Seat Relay	1
14	97191	Seat Relay Pigtail	1
15	65509	Fuse	
16	20254	Fuse Holder	
17	60117	Low Oil Horn **(Optional)**	1
	C-113	Horn Clamp	1
18	500003	ECO Light	1
19	500005	Ground Wire	1

www.mymowerparts.com

For Dixie Chopper Discount Parts Call 606-678-9623 or 606-561-4983

DIXIE CHOPPER
27Hp & 32Hp
GUARDIAN ELECTRICAL DIAGRAM

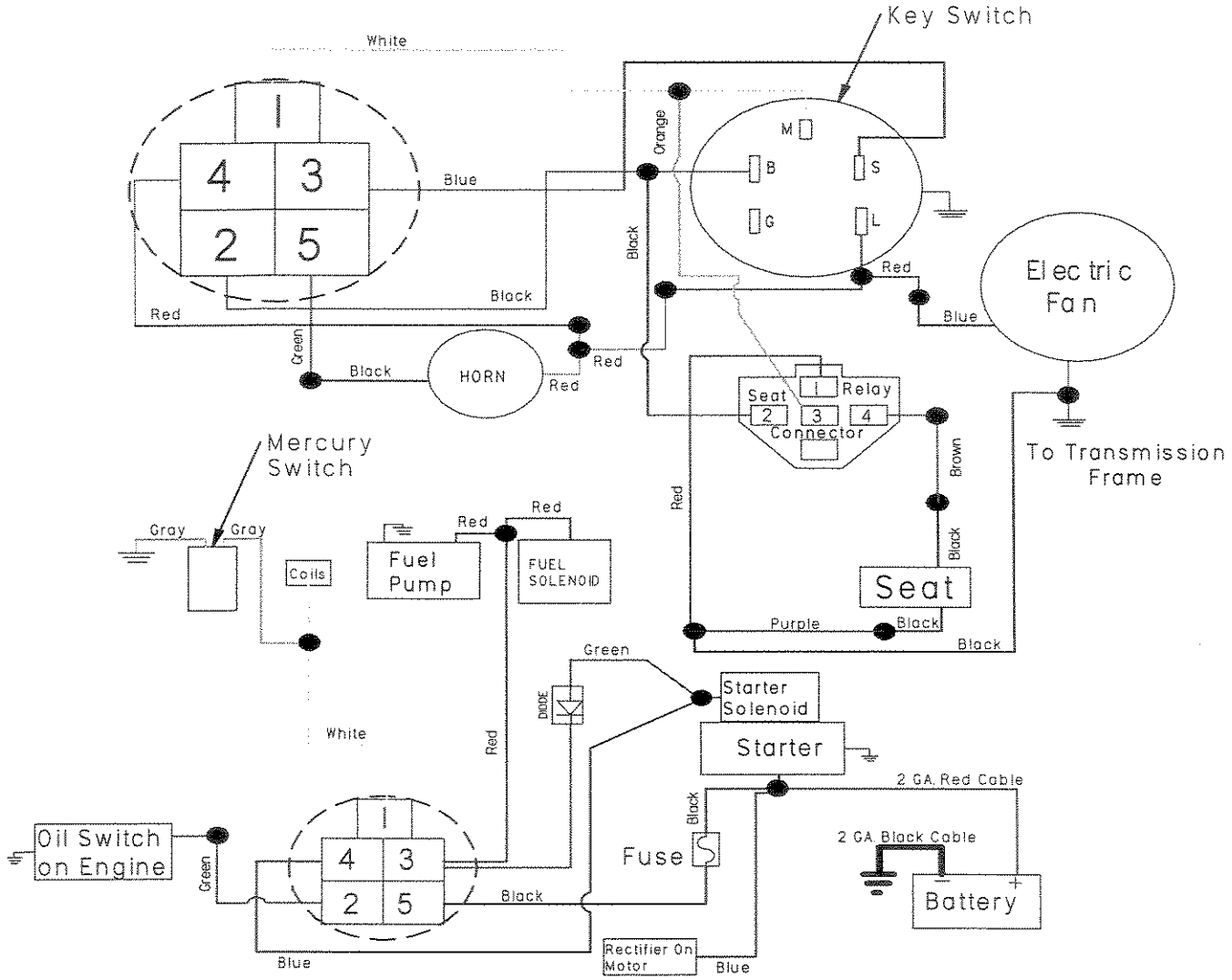

REF #	PART #	DESCRIPTION	QTY.
1	500004	Guardian Wiring Harness	1
2	20245	Ignition Switch	1
3	20246-T	Hour Meter/Tach	1
4	68247	Tach Bracket	1
5	N/A	Battery	1
6	97145	Diesel Battery Tray **(XT3200)**	1
	400065	Standard Battery Tray **(XG2703)**	1
7	20228	Battery Strap	1
8	97323	Battery 2Ga. Cable Positive 80" **(XT3200)**	1
	20227-72	Battery Cable Positive 72" **(XG2703)**	1
9	500006	Battery Cable Ground 80" **(XT3200)**	1
	20226-B	Battery Cable Ground 12" **(XG2703)**	1

REF #	PART #	DESCRIPTION	QTY.
10	20225-B	Battery Boot **(XG2703)**	1
	97327	Battery Boot **(XT3200)**	1
11	40229	Mercury Switch	1
12	C-112	Clamp For Mercury Switch	1
13	65510	Seat Relay	1
14	97191	Seat Relay Pigtail	1
15	65509	Fuse	
16	20254	Fuse Holder	
17	60117	Low Oil Horn	1
	C-113	Horn Clamp	1
18	200043	Electrical Fan **(XT3200 Only)**	1

www.mymowerparts.com

For Dixie Chopper Discount Parts Call 606-678-9623 or 606-561-4983

NOTES

www.mymowerparts.com

For Dixie Chopper Discount Parts Call 606-678-9623 or 606-561-4983

NOTES

www.mymowerparts.com

For Dixie Chopper Discount Parts Call 606-678-9623 or 606-561-4983

DIXIE CHOPPER

6302 E. County Road 100 North
Coatesville, IN. 46121
Phone 1-765-CHOPPER
www.dixiechopper.com

Dixie Chopper, Magic Circle, and the Magic Circle Atom Logo are all trademarks of Magic Circle Corporation and may not be reproduced without permission.
Printed In USA
Specifications and instructions subject to change without notice.
Print Date 1/05

www.mymowerparts.com