For Discount Cub Cadet Parts Call 606-678-9623 or 606-561-4983

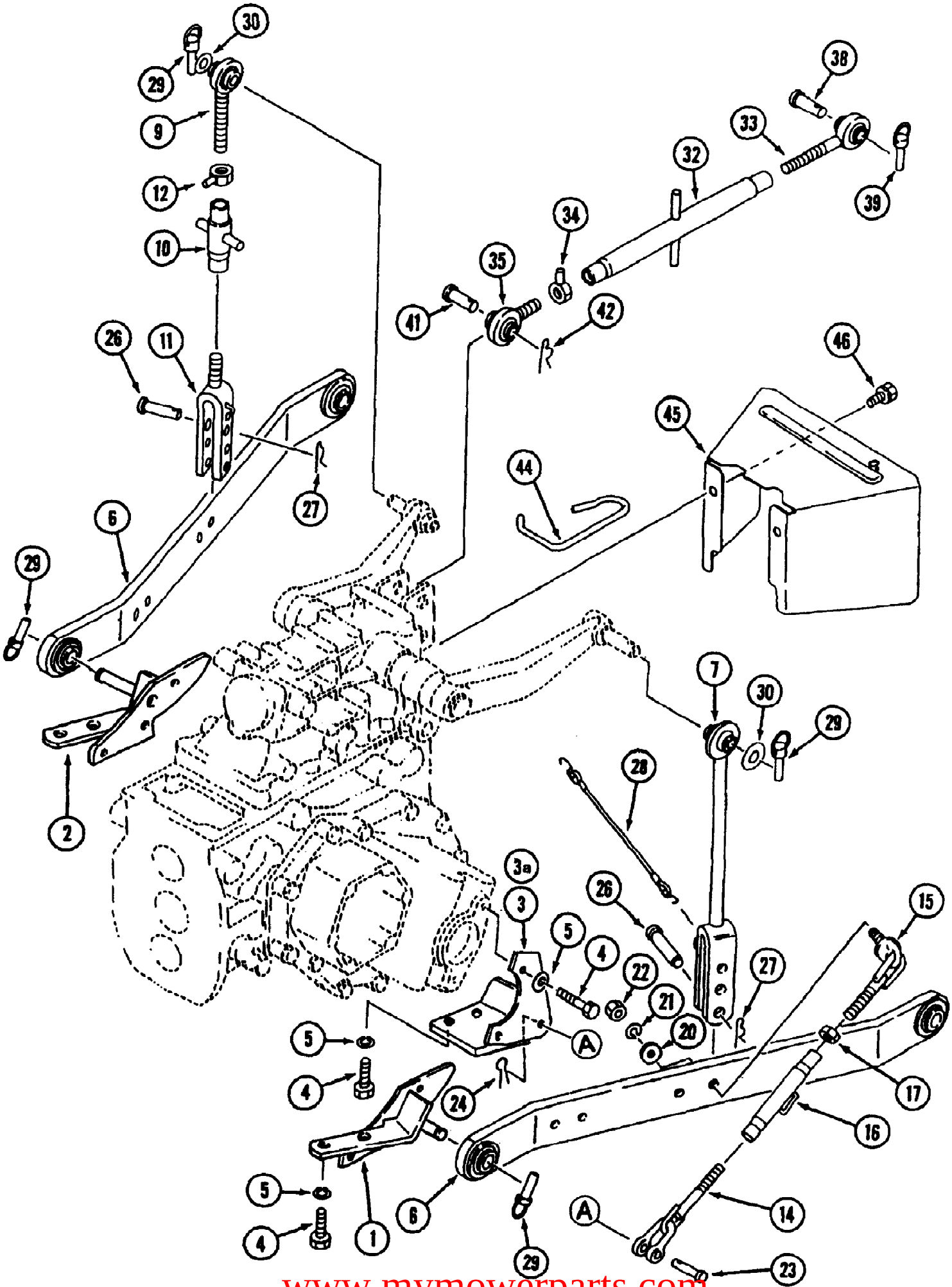

www.mymowerparts.com

For Discount Cub Cadet Parts Call 606-678-9623 or 606-561-4983

Ref #	Part Number	Qty	S/P/F	Description
1	MA-19643013AG0	1	/P	Bracket L.H.
2	MA-19643015AG0	1	/P	Bracket R.H.
3	MA-19643001AG0	1		Bracket L.H.
3A	MA-19643002AG0	1		Bracket R.H.
4	MA-A0400114035	12		Bolt
5	MA-A3600101402	12		Washer
6	MA-19643006AG0	2		Link, Lower
	MA-19643005AG0	1		3P Sub Ass'y. Includes Items 6 - 42
7	MA-19643007AG0	1	/P	Rod, Lift L.H.
	MA-19643011AG0	1	/P	Rod, Lift R.H.Ass'y. Includes Items 9 - 12
9	MA-19633012AG0	1	/P	Rod A
10	MA-10323025AG0	1	/P	Lift Rod Middle
11	MA-19643014AG0	1	/P	Rod B
12	MA-10323024000	1	S	Nut, Lock
	MA-19643016001	2		Check Chain Ass'y. Includes Items 14 - 17
14	MA-19643017000	2		Chain A
15	MA-19643018000	2		Chain B
16	MA-10323027001	2		Turn Buckle
17	MA-A3000114002	2		Nut
20	MA-19643019AG0	2		Washer, Check Chain
21	MA-A3600101802	2	/P	Washer
22	MA-A3030118001	2		Nut
23	MA-19633021000	2		Pin, Clevis
24	MA-05200130020	2		Pin, Split
26	MA-10323018001	2	/P	Pin
27	MA-10323019000	2		Pin Snap
28	MA-19633024000	1		Band
29	MA-10323012000	6		Pin, Linch
30	MA-10323016000	2		Washer
	MA-19643036AG0	1		Top Link Ass'y. Includes Items 32 - 35
32	MA-19643037AG0	1	/P	Turn Buckle
33	MA-19643038AG0	1	/P	Adjuster
34	MA-19643039000	1		Nut-Lock
35	MA-19643041AG0	1	/P	Adjuster
38	MA-19633037000	1		Pin, Upper Link
39	MA-10323012000	1		Linch Pin
41	MA-19633038000	1		Pin
42	MA-19633041000	1		Pin, Snap
44	MA-19633031000	1		Hook, Top Link
45	MA-19633034AG0	1	S	Cover, PTO
46	MA-F1540112025	2		Bolt

www.mymowerparts.com

For Discount Cub Cadet Parts Call 606-678-9623 or 606-561-4983

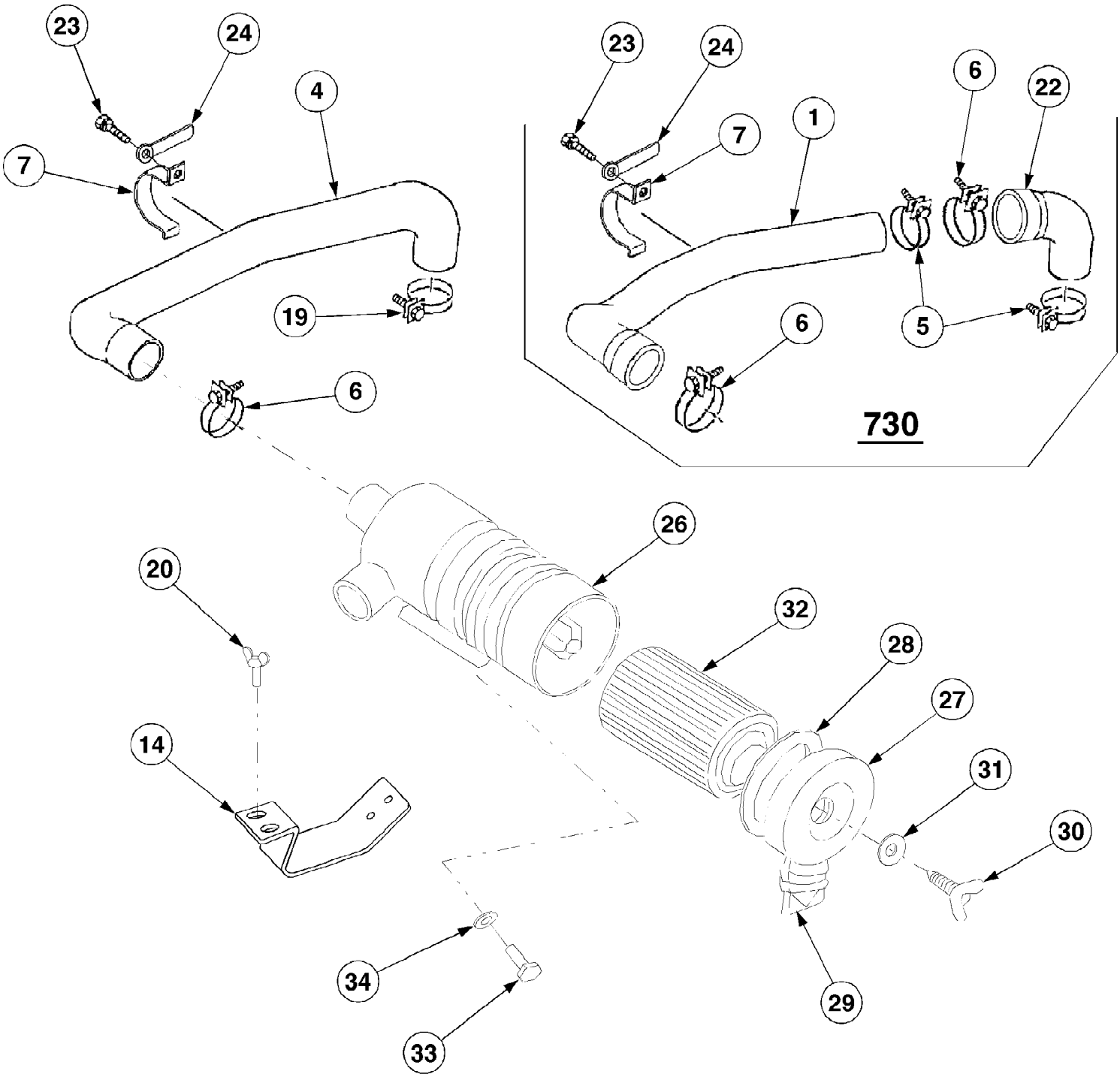

www.mymowerparts.com

For Discount Cub Cadet Parts Call 606-678-9623 or 606-561-4983

Ref #	Part Number	Qty	S/P/F	Description
	MA-19680511000	1		Air Cleaner Assembly. (items 26-32) Refer to Service Advisory CCT-020.
1	MA-19680517000	1		Hose, Air A
4	MA-19640513000	1		Hose, Air
5	MA-00501100530	2		Clamp, Hose
6	MA-00501100630	2		Clamp, Hose
7	MA-19630513000	1		Clamp
14	MA-19680513AG0	1		Plate
19	MA-00501100560	1		Clamp, Hose
20	MA-14141454000	1		Bolt, Wing
22	MA-19680518000	1		Hose, Air B
23	MA-H1540108020	1		Bolt
24	MA-00502108083	1		Clamp
26		1		Case Ass'y. (order assembly)
27	MA-35530501300	1		Cap
28	MA-35530501400	1		Gasket
29	MA-35460501400	1		Valve, Unloader
30	MA-35530501600	1		Bolt, Wing
31	MA-35460501600	1		Washer, Seal
32	MA-35530501800	1		Element use with MA-19680511000
33	MA-F1540108012	2		Bolt
34	MA-03500150822	2		Washer

www.mymowerparts.com

For Discount Cub Cadet Parts Call 606-678-9623 or 606-561-4983

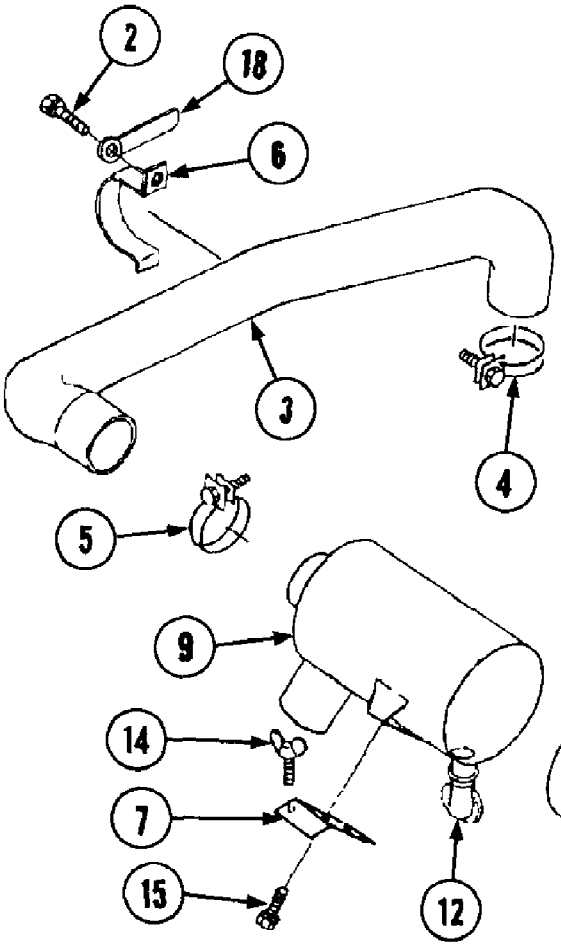

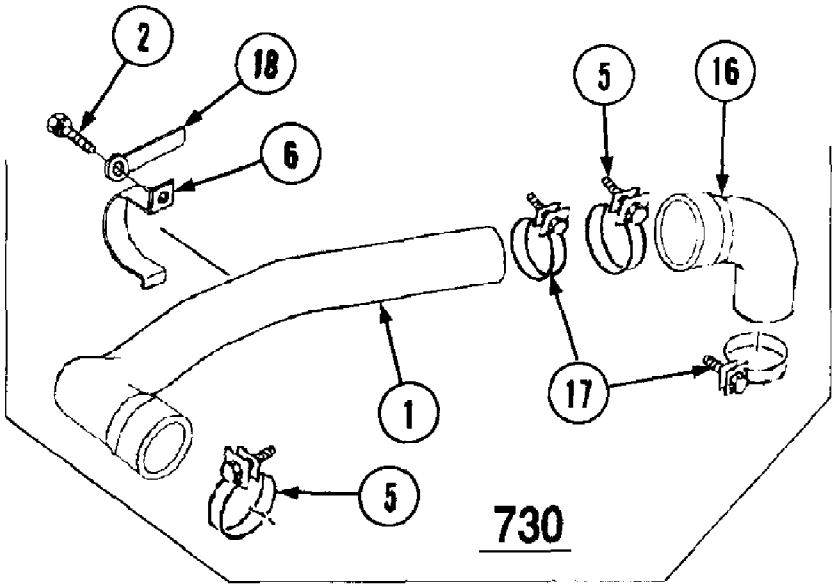

www.mymowerparts.com

For Discount Cub Cadet Parts Call 606-678-9623 or 606-561-4983

Ref #	Part Number	Qty	S/P/F	Description
1	MA-19680517000	1	F	Hose, Air A
2	MA-F1540108020	1	F	Bolt
	MA-H1540108020	1	F	Bolt
3		1		Hose, Air Not used on this product
4		1		Clamp, Hose Not used on this product
5	MA-00501100630	2		Clamp, Hose
6	MA-19630513000	1		Clamp
7	MA-19640514AG0	1		Plate
	MA-19640511000	1		Air Cleaner Ass'y. Includes items 9-13
9	MA-19640511100	1		Case Ass'y.
10	MA-10310511200	1		Element
11	MA-37000306000	1		Bolt Ass'y. Wing
12	MA-10300511300	1		Valve
13	MA-37000308000	1		Washer, Seal
14	MA-14141454000	1		Bolt, Wing
15	MA-F1540108016	2		Bolt
16	MA-19680518000	1	F	Hose, Air B
17	MA-00501100530	2	F	Clamp, Hose
18	MA-00502108083	1	F	Clamp

www.mymowerparts.com

For Discount Cub Cadet Parts Call 606-678-9623 or 606-561-4983

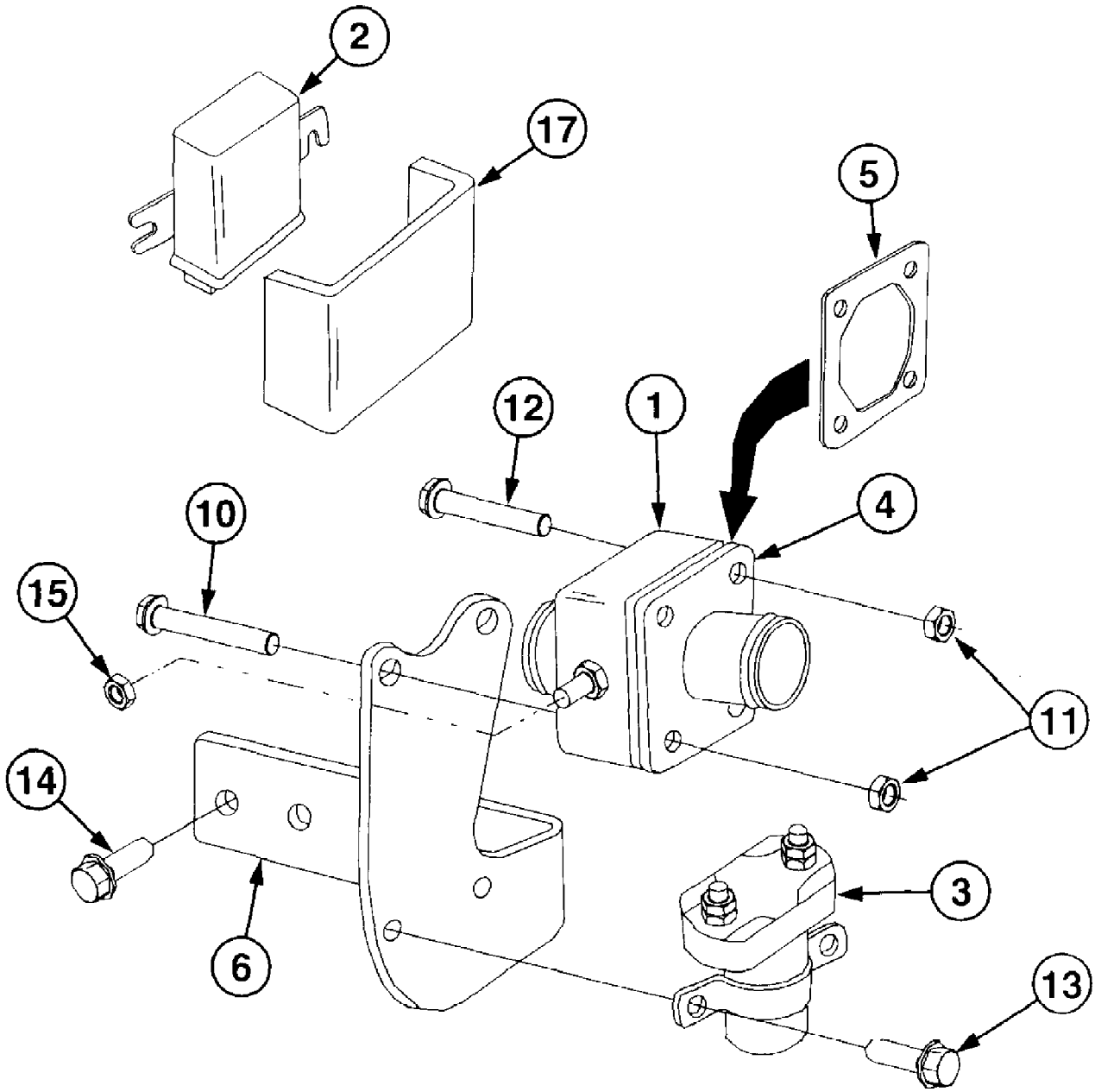

www.mymowerparts.com

For Discount Cub Cadet Parts Call 606-678-9623 or 606-561-4983

Air Heater Assembly 30HP Engine 7300 S/N 21933 & Up

Ref #	Part Number	Qty	S/P/F	Description
1	MA-30H30-01800	1		Heater, Air
2	MA-30H66-03100	1		Controler
3	MA-30H66-03200	1		Relay
4	MA-30H30-1600	1		Pipe, Flange
5	MA-30H30-01700	1		Gasket
6	MA-30H30-01500	1		Bracket
10	MA-F0500108040	2		Bolt
11	MA-F3010108000	4		Nut
12	MA-F0500108035	2		Bolt
13	MA-F0500106012	2		Bolt
14	MA-F0500108016	2		Bolt
15	MA-F3000106000	1		Nut
17	MA-19680048000	1		Cover

www.mymowerparts.com

For Discount Cub Cadet Parts Call 606-678-9623 or 606-561-4983

Alternator 30 HP Engine (7300 S/N 21495-Lower/7305 S/N 22230-Lower)

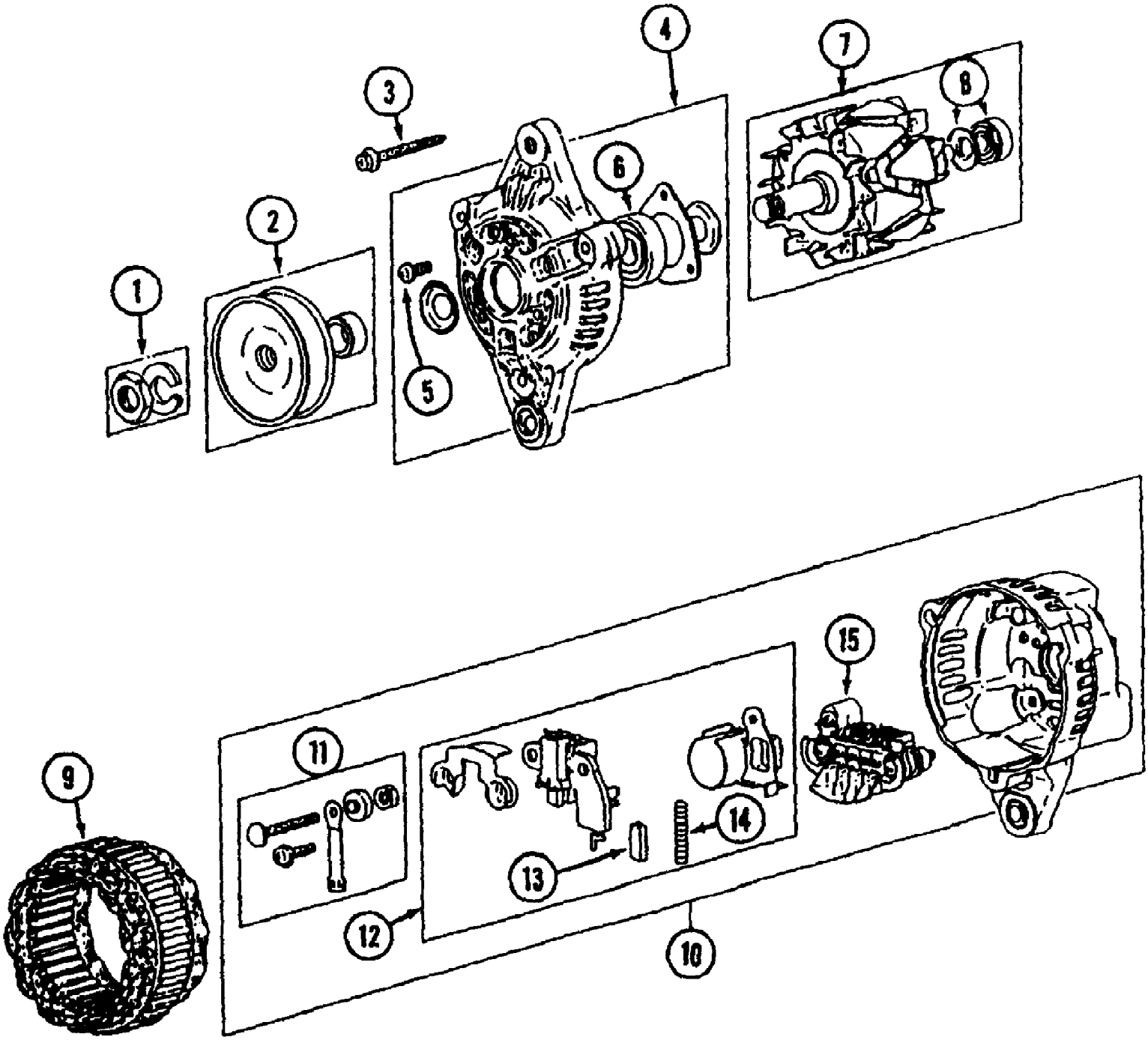

www.mymowerparts.com

For Discount Cub Cadet Parts Call 606-678-9623 or 606-561-4983

Alternator 30 HP Engine (7300 S/N 21495-Lower/7305 S/N 22230-Lower)

Ref #	Part Number	Qty	S/P/F	Description
	MA-MM435752	1		Alternator Ass'y. Includes Items 1 - 15
1	MA-A529X02171	1		Nut Set
2	MA-A628T54270	1		Pulley Set
3	MA-A414X18271	1		Bolt Set
4	MA-A640T34970	1		Bracket Ass'y., Front
5	MA-A414X18371	1		Screw Set
6	MA-S930P61770	1		Bearing, Front
7	MA-A880T38970	1		Rotor Ass'y.
8	MA-S930P17970	1	S	Bearing, Rear
9	MA-A383T31370	1		Starter Ass'y.
10	MA-A641T74470	1		Bracket Ass'y., Rear
11	MA-A450X12571	1		Terminal Set
12	MA-A866X12571	1		Regulator Ass'y.
13	MA-A648D02570	2	S	Brush
14	MA-A389C01101	2		Spring, Brush
15	MA-A860T21670	1		Rectifier Ass'y.

www.mymowerparts.com

For Discount Cub Cadet Parts Call 606-678-9623 or 606-561-4983

Alternator 30 HP Engine (7300 S/N 21496-Higher/7305 S/N 22231-Higher)

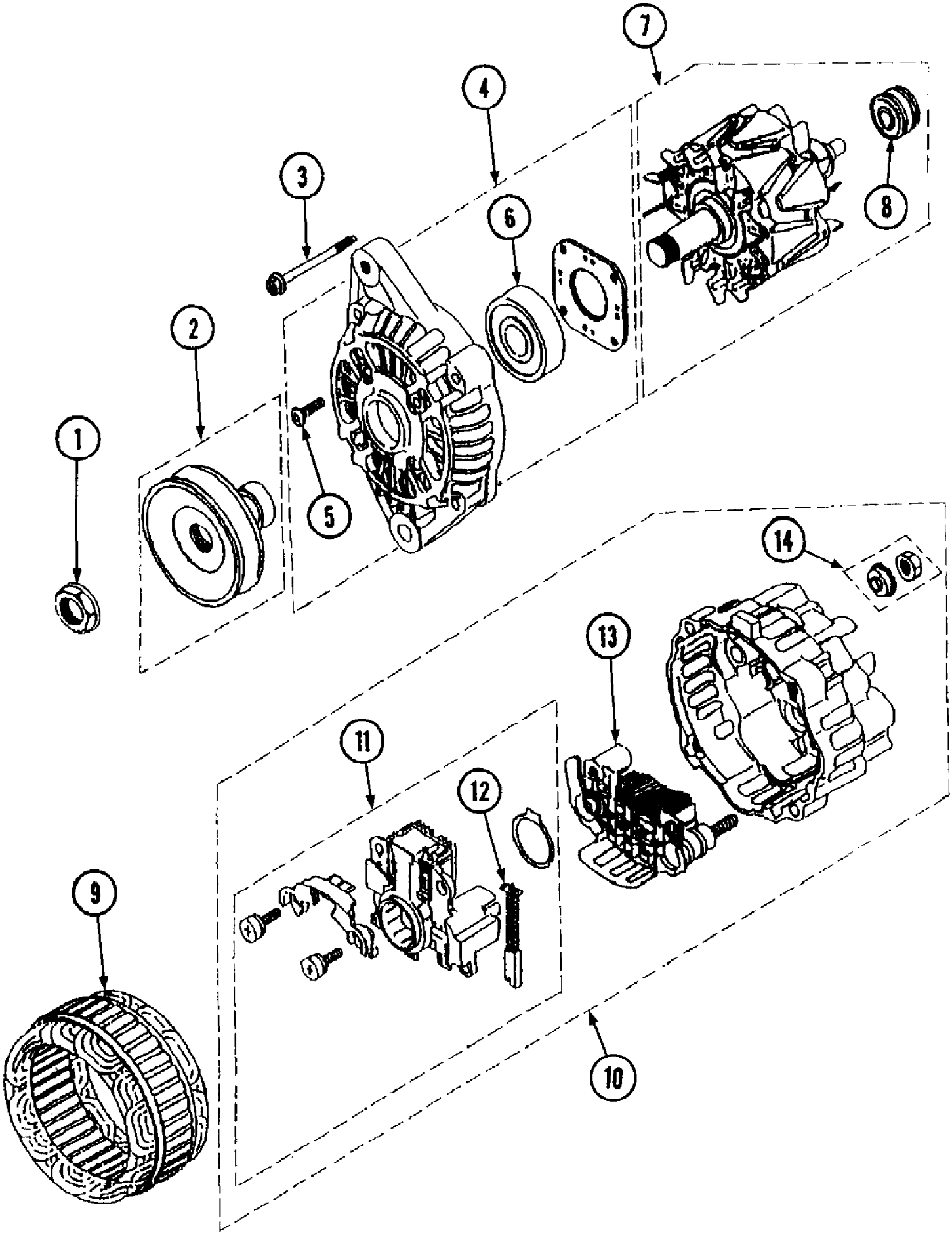

www.mymowerparts.com

For Discount Cub Cadet Parts Call 606-678-9623 or 606-561-4983

Alternator 30 HP Engine (7300 S/N 21496-Higher/7305 S/N 22231-Higher)

Ref #	Part Number	Qty	S/P/F	Description
	MA-30A68-00800	1	S	Alternator Ass'y. Includes items 1-14
1	MA-MM502565	1	S	Nut Set
2	MA-MM502578	1		Pulley Set
3	MA-MM502566	1	S	Bolt Set
4	MA-MM502597	1		Bracket Ass'y., Front
5	MA-MM502568	1		Screw Set
6	MA-MM502569	1		Bearing, Front
7	MA-MM502570	1		Rotor Ass'y.
8	MA-MM502571	1	S	Bearing, Rear
9	MA-MM502591	1		Stator Ass'y.
10	MA-MM502598	1		Bracket Ass'y., Rear
11	MA-MM502585	1		Regulator Set
12	MA-MM502577	2	S	Brush
13	MA-MM502599	1		Rectifier Ass'y.
14	MA-MM502588	1	S	Nut Set

www.mymowerparts.com

For Discount Cub Cadet Parts Call 606-678-9623 or 606-561-4983

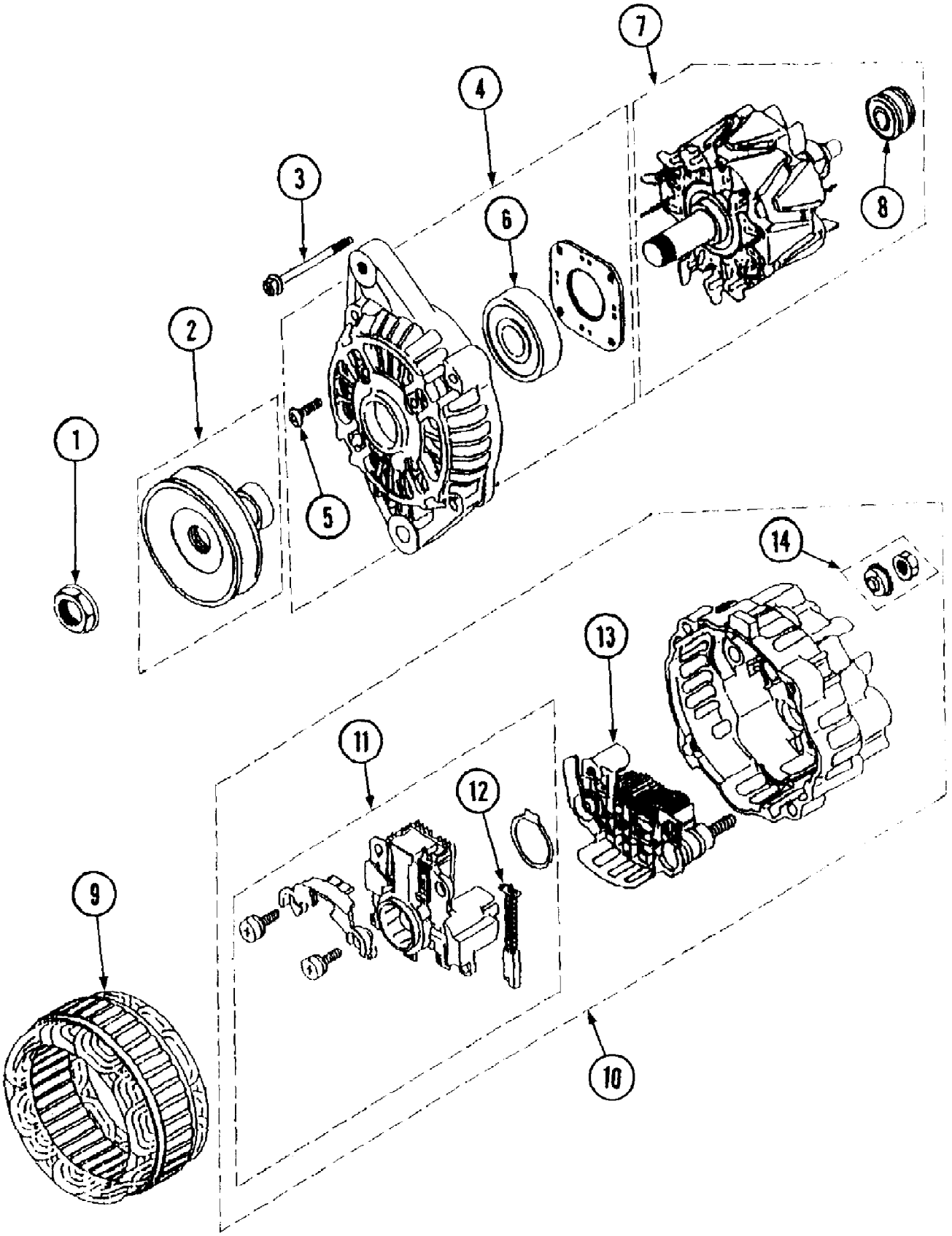

www.mymowerparts.com

For Discount Cub Cadet Parts Call 606-678-9623 or 606-561-4983

Alternator 30HP Engine 7300 S/N 21933 & Up

Ref #	Part Number	Qty	S/P/F	Description
	MA-30A68-00801	1	/P	Alternator Ass'y. Includes items 1-14
1	MA-MM502565	1	S	Nut Set
2	MA-MM502578	1		Pulley Ass'y.
3	MA-MM502566	1	S	Bolt Set
4	MA-47X11-02295	1		Bracket Ass'y., Front
5	MA-MM502568	1		Screw Set
6	MA-47X11-02296	1		Bearing, Front
7	MA-47X11-02301	1		Rotor Ass'y.
8	MA-MM502571	1	S	Bearing, Rear
9	MA-MM502591	1		Stator Ass'y.
10	MA-MM502598	1		Bracket Ass'y., Rear
11	MA-47X11-02304	1		Regulator Set
12	MA-MM502577	2	S	Brush
13	MA-MM502599	1		Rectifier Ass'y.
14	MA-MM502588	1	S	Nut Set

www.mymowerparts.com

For Discount Cub Cadet Parts Call 606-678-9623 or 606-561-4983

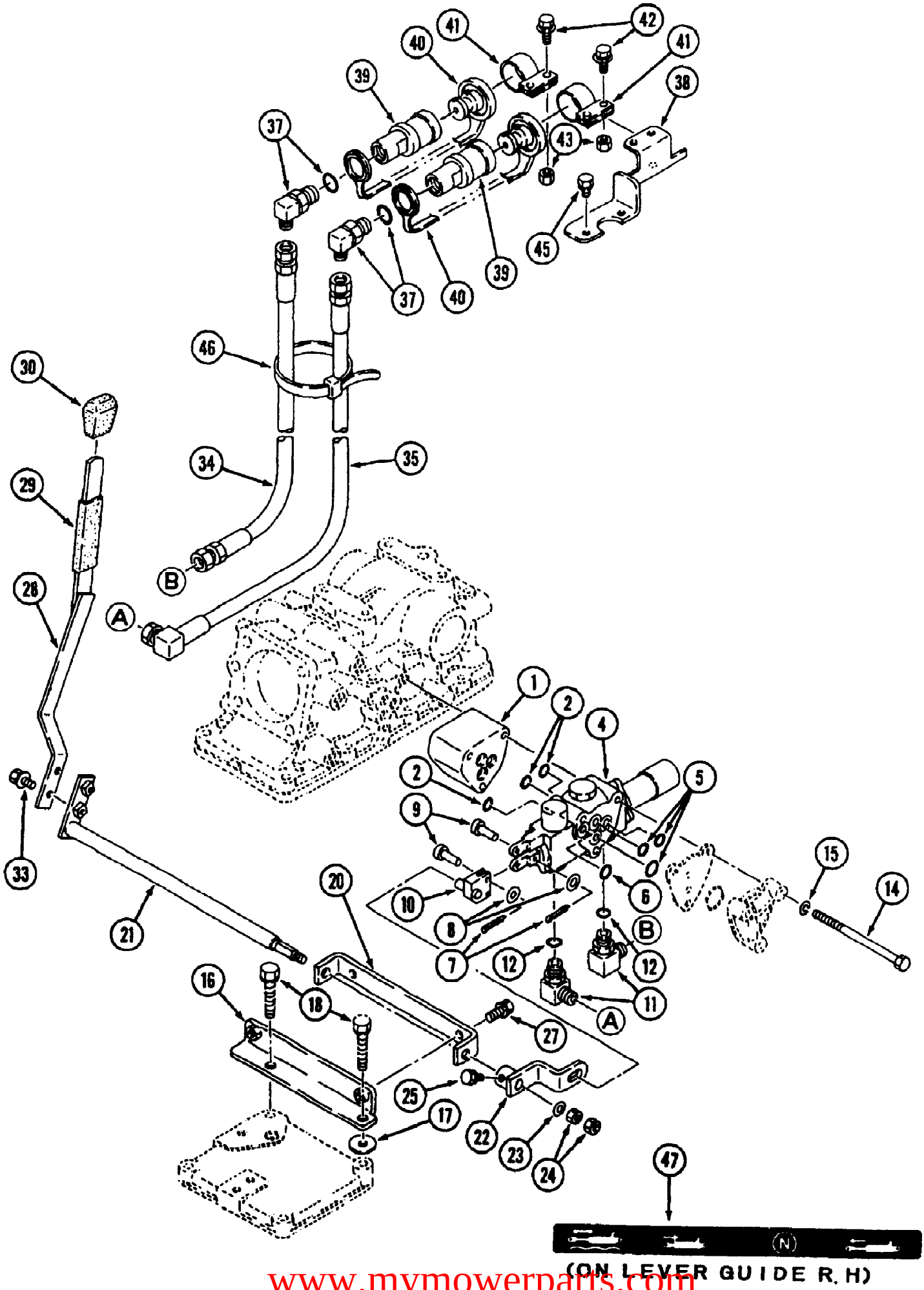

www.mymowerparts.com

For Discount Cub Cadet Parts Call 606-678-9623 or 606-561-4983

Ref #	Part Number	Qty	S/P/F	Description
1	MA-19642481000	1		Spacer
2	MA-08301100120	3	/P	O-Ring
	MA-19632482AG0	1		Aux.Valve Ass'y. Includes Items 4 - 9
4		1		Body
5	MA-08300100120	3	S	O-Ring
6	MA-08300100160	1	/P	O-Ring
7	MA-05200125016	3	S	Pin,Split
8	MA-03500130815	3		Washer
9	MA-11556501270	3		Pin,Clevis
10	MA-19642483000	1		Arm
11	MA-06313117170	2		Elbow 90
12	MA-08300100140	2		O-Ring
14	MA-A0540108140	3		Bolt
15	MA-A3600100802	3		Washer
16	MA-19642484AG0	1		Bracket
17	MA-03500161032	1		Washer
18	MA-F1550110055	2		Bolt
20	MA-19642485AG0	1		Bracket
21	MA-19642486000	1		Shaft
22	MA-19642487000	1		Arm
23	MA-03500140818	1		Washer
24	MA-A3010108002	2		Nut
25	MA-A0500108012	1		Bolt
27	MA-F1540108020	2		Bolt
	MA-19642488AG0	1		Lever Ass'y. Includes Items 28 & 29
28		1		Lever
29	MA-19632439000	1		Tube
30	MA-11742449000	1		Grip
33	MA-H1540108016	2		Bolt
34	MA-19642492000	1		Hose Ass'y.
35	MA-19642493000	1		Hose Ass'y.
37	MA-19632494000	2		Fitting
38	MA-19632496AG0	1		Bracket
39	727-3093	2	S	Coupling
40	731-3177	2		Plug/A
41	MA-12185264000	2		Clamp, Coupler
42	MA-H1540108020	4		Bolt
43	MA-F3010108001	4		Nut
45	MA-F1540108012	2		Bolt
46	MA-00511070070	1		Band, Wire
47	MA-19632753000	1		Label, Aux. Valve

www.mymowerparts.com

For Discount Cub Cadet Parts Call 606-678-9623 or 606-561-4983

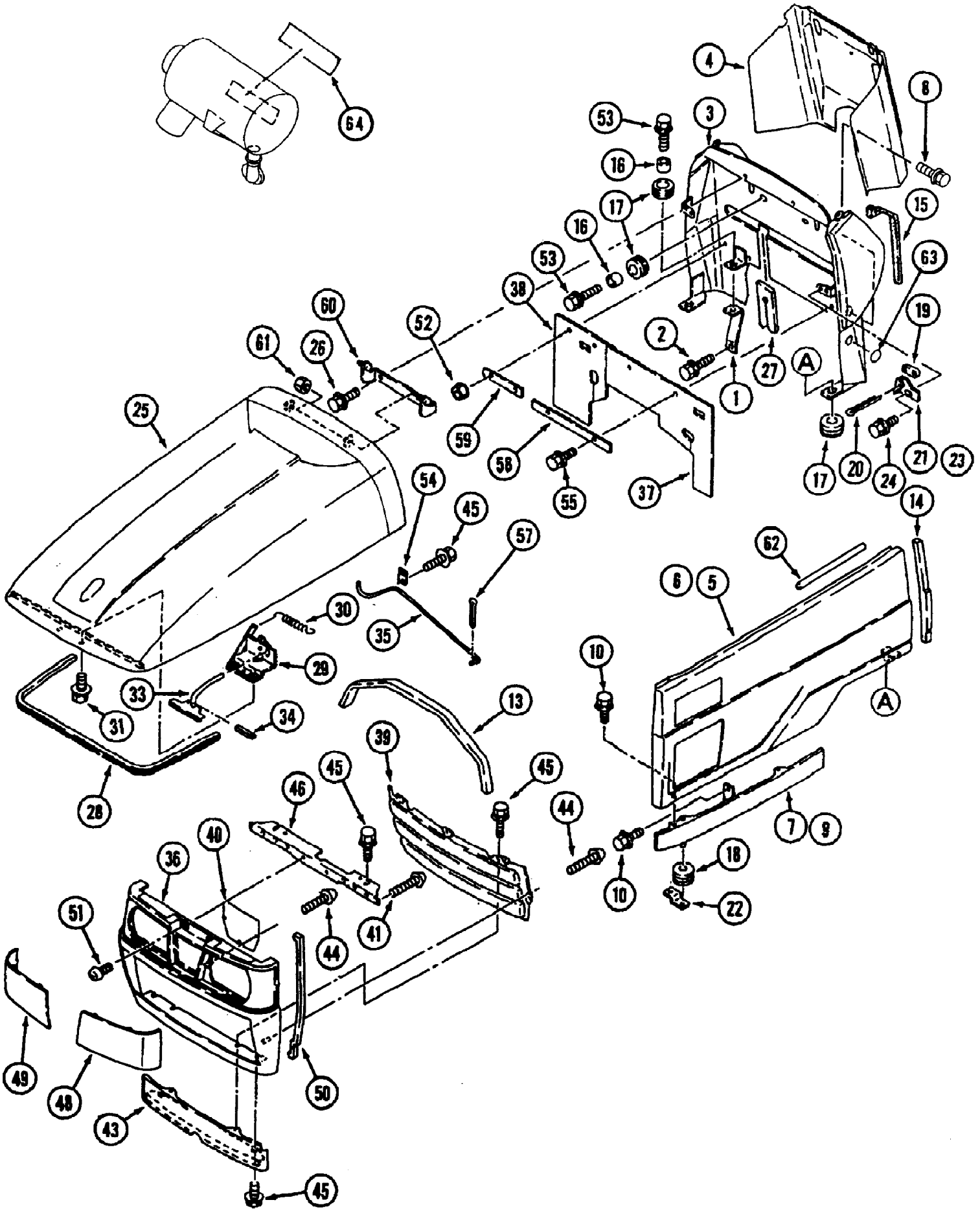

www.mymowerparts.com

For Discount Cub Cadet Parts Call 606-678-9623 or 606-561-4983

Ref #	Part Number	Qty	S/P/F	Description
1	MA-19642613000	2		Bracket
2	MA-H1540108020	2		Bolt
3	MA-19682615BC0	1	F	Body, Panel
	MA-19682615BC1	1	F	Body, Panel Replaces MA-19682615BC0 when inventory is depleted.
4	MA-19682616001	1		Cover, Panel Rear
5	MA-19682618BC0	1		Cover, Side L.H.
6	MA-19682619BC0	1		Cover, Side R.H.
7	MA-19642621AG0	1		Cover, Side L.H.
8	MA-H1640406016	3		Bolt
9	MA-19642622AG0	1		Cover,Side R.H.
10	MA-H1540108016	6		Bolt
13	MA-10382631000	1		Cushion
14	MA-19632623000	2		Cushion
15	MA-10192598300	2	S	Cushion
16	MA-67700-26000	4		Collar
17	MA-11930439000	6		Grommet
18	MA-11740217001	2		Grommet
19	MA-10322629001	4	/P	Hook
20	MA-05200130032	4		Pin,Split
21	MA-10322631000	2		Bracket A
22	MA-19632621AG0	2		Bracket
23	MA-10322632000	2		Bracket B
24	MA-H1540108016	2		Bolt
25	MA-19682632BC0	1		Hood, Bonnet
26	MA-H1840108020	2		Bolt
27	MA-19632615000	1		Cushion
28	MA-19632634000	1		Cushion
29	MA-19632636000	1		Bracket, Lever
30	MA-19740722000	1		Spring
31	MA-H1540108016	2		Bolt
33	MA-19632637BC0	1		Lever
34	MA-05500003032	1		Pin, Spring
35	MA-19632642000	1		Rod, Stopper
36	MA-19672645000	1		Grille
37	MA-19642612000	1		Cover
38	MA-19642612100	1		Cover
39	MA-19672646AG0	1	/P	Screen
40	MA-19672647AG0	1	/P	Screen
41	MA-10212626000	2		Screw, Tapping
43	MA-19642646AG0	1		Cover, Front
44	MA-04322105010	8		Screw
45	MA-H1440106016	9	/P	Bolt
46	MA-19632651BC0	1	S	Support, Grille
48	MA-19632655000	1		Cover, Lamp L.H.
49	MA-19632656000	1		Cover, Lamp R.H.
50	MA-37357619700	2		Seal, Dust
51	MA-A2520706012	2		Screw
52	MA-F3010108001	2		Nut
53	MA-H1540108025	4		Bolt
54	MA-11910414000	1		Clip
55	MA-H1440106012	2		Bolt

www.mymowerparts.com

For Discount Cub Cadet Parts Call 606-678-9623 or 606-561-4983

Ref #	Part Number	Qty	S/P/F	Description
57	MA-05200125016	1	S	Pin,Split
58	MA-19632616000	1		Plate
59	MA-19632617000	1		Plate
60	MA-19632641000	1		Bracket, Hood
61	MA-A3810108000	1		Nut
62	MA-MA911822000	2	S	Rubber, Cushion
63	MA-19672621000	2		Mark
64	MA-37364709500	1		Plate

www.mymowerparts.com

For Discount Cub Cadet Parts Call 606-678-9623 or 606-561-4983

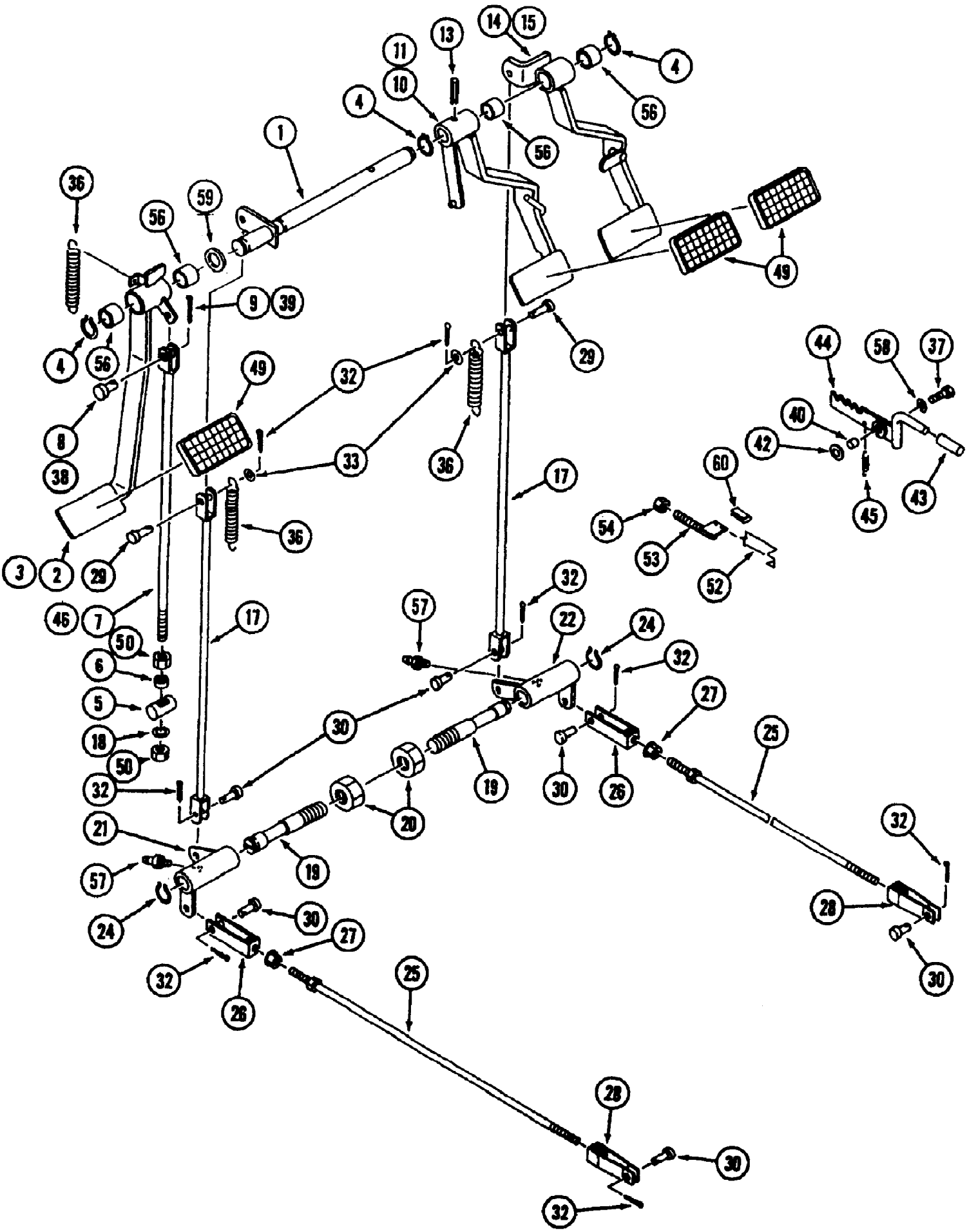

www.mymowerparts.com

For Discount Cub Cadet Parts Call 606-678-9623 or 606-561-4983

Ref #	Part Number	Qty	S/P/F	Description
1	MA-19631805AG0	1		Shaft, Brake
2		1		Pedal, Clutch Not used on this application
3	MA-19631845AG0	1		Pedal, Clutch
4	MA-07400002500	3	/P	Ring
5	MA-19631811000	1		Pin
6	MA-35155086100	1		Collar
7	MA-19641806000	1		Rod, Clutch
8	MA-05621114035	1		Pin, Clevis
9	MA-05200140025	1		Pin, Split
10		1		Pedal, Brake L.H. Not used on this application
11	MA-19641809AG1	1		Pedal, Brake L.H.
13	MA-19631816000	1		Pin, Spring
14		1		Pedal, Brake R.H. Not used on this application
15	MA-19641817AG0	1		Pedal, Brake R.H.
17	MA-19641819000	2		Rod, Brake A
18	MA-A3600101202	1		Washer
19	MA-19631821000	2		Shaft, Link
20	MA-A0730124001	2		Nut
21	MA-19641823AG0	1		Link, Brake L.H.
22	MA-19641824AG0	1		Link, Brake R.H.
24	MA-07400102200	2		Ring
25	MA-19641826000	2		Rod, Brake B
26	MA-10072222000	2		Joint
27	MA-A3030110002	2		Nut
28	MA-10251711000	2		Joint
29	MA-05620108030	2		Pin, Clevis
30	MA-05620108025	6		Pin, Clevis
32	MA-05200125020	8		Pin, Split
33	MA-03500130815	2		Washer
36	MA-27141917000	3		Spring
37	MA-F1540108025	1		Bolt
38		1		Pin, Clevis Not used on this application
39		1		Pin, Split Not used on this application
40	MA-67700-26000	1		Collar
42	MA-07310101204	AR		Liner t=0.4
43	MA-14212284000	1		Grip
44	MA-19631839AG1	1		Lever, Parking
45	MA-11352230000	1		Spring
46		1		Rod, Clutch Not used on this application
49	MA-11931812000	3		Cover, Pedal
50	MA-A3030112002	2		Nut
52	MA-19631843001	1		Hook, Clutch Pedal
53	MA-19641842001	1		Bolt, Stopper
54	MA-A3030110002	1		Nut
56	MA-07961025200	4		Bushing
57	MA-A6513100300	2	S	Nipple, Grease
58	MA-03500160826	1		Washer
59	MA-07310102510	AR	/P	Liner
60	MA-35011788000	1		Rubber, Edge

www.mymowerparts.com

For Discount Cub Cadet Parts Call 606-678-9623 or 606-561-4983

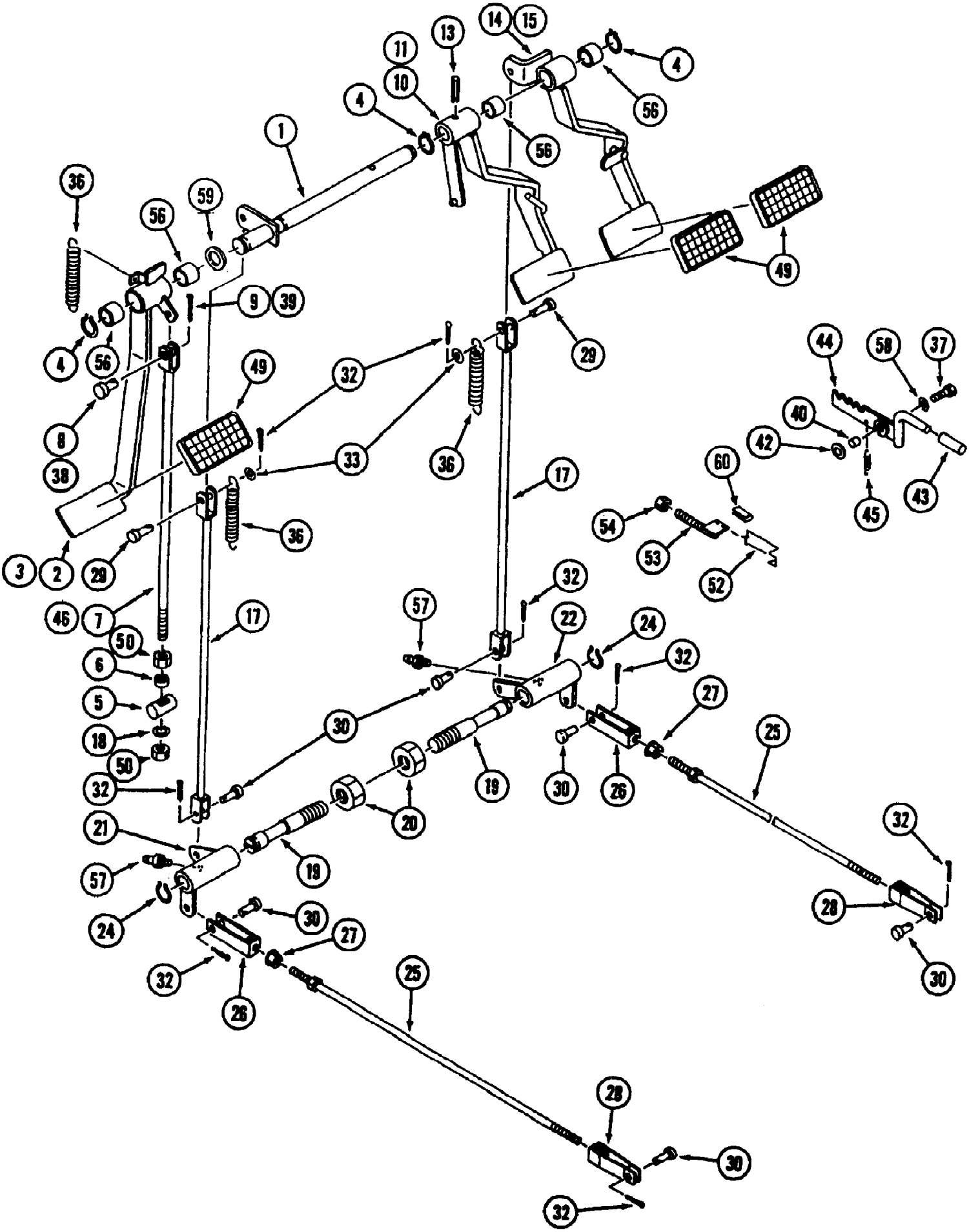

www.mymowerparts.com

For Discount Cub Cadet Parts Call 606-678-9623 or 606-561-4983

Ref #	Part Number	Qty	S/P/F	Description
1	MA-19631805AG0	1		Shaft, Brake
2	MA-19631807AG1	1		Pedal, Clutch
3		1		Pedal, Clutch Not used on this application
4	MA-07400002500	3	/P	Ring
5	MA-19631811000	1		Pin
6	MA-35155086100	1		Collar
7		1		Rod, Clutch Not used on this application
8		1		Pin, Clevis Not used on this application
9		1		Pin, Split Not used on this application
10	MA-19631815AG1	1		Pedal, Brake L.H.
11		1		Pedal, Brake L.H. Not used on this application
13	MA-19631816000	1		Pin, Spring
14	MA-19631817AG0	1		Pedal, Brake R.H.
15		1		Pedal, Brake R.H. Not used on this application
17	MA-19641819000	2		Rod, Brake A
18	MA-A3600101202	1		Washer
19	MA-19631821000	2		Shaft, Link
20	MA-A0730124001	2		Nut
21	MA-19641823AG0	1		Link, Brake L.H.
22	MA-19641824AG0	1		Link, Brake R.H.
24	MA-07400102200	2		Ring
25	MA-19641826000	2		Rod, Brake B
26	MA-10072222000	2		Joint
27	MA-A3030110002	2		Nut
28	MA-10251711000	2		Joint
29	MA-05620108030	2		Pin, Clevis
30	MA-05620108025	6		Pin, Clevis
32	MA-05200125020	8		Pin, Split
33	MA-03500130815	2		Washer
36	MA-27141917000	3		Spring
37	MA-F1540108025	1		Bolt
38	MA-05621110030	1		Pin,Clevis
39	MA-05200130020	1		Pin,Split
40	MA-67700-26000	1		Collar
42	MA-07310101204	AR		Liner t=0.4
43	MA-14212284000	1		Grip
44	MA-19631839AG1	1		Lever, Parking
45	MA-11352230000	1		Spring
46	MA-19641845000	1		Rod, Clutch
49	MA-11931812000	3		Cover, Pedal
50	MA-A3030112002	2		Nut
52	MA-19631843001	1		Hook, Clutch Pedal
53	MA-19641842001	1		Bolt, Stopper
54	MA-A3030110002	1		Nut
56	MA-07961025200	4		Bushing
57	MA-A6513100300	2	S	Nipple, Grease
58	MA-03500160826	1		Washer
59	MA-07310102510	AR	/P	Liner
60	MA-35011788000	1		Rubber, Edge

www.mymowerparts.com

For Discount Cub Cadet Parts Call 606-678-9623 or 606-561-4983

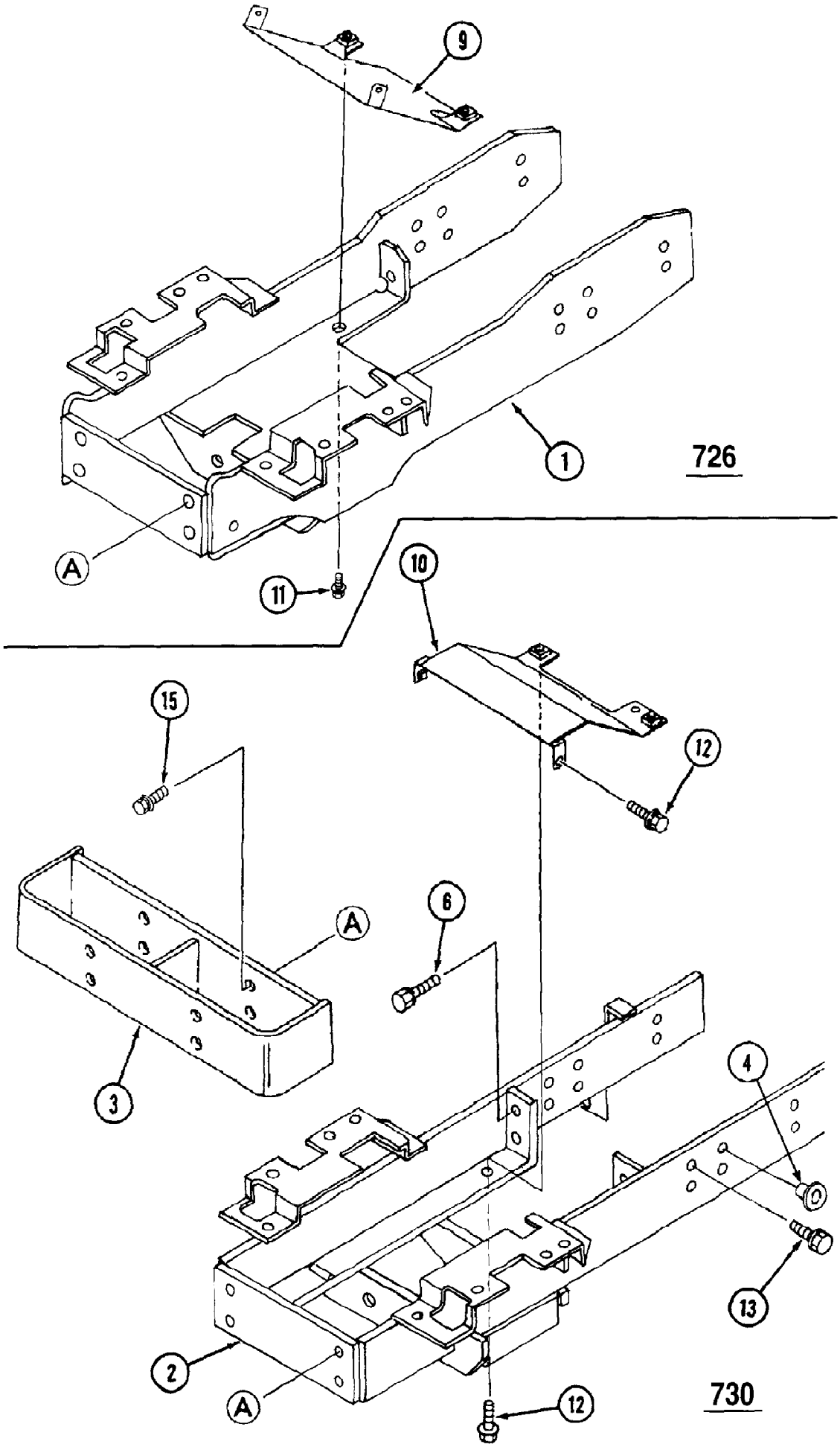

www.mymowerparts.com

For Discount Cub Cadet Parts Call 606-678-9623 or 606-561-4983

Ref #	Part Number	Qty	S/P/F	Description
1		1		Bracket, Front Not used on this product
2	MA-19682005AG2	1	S/F	Bracket, Front
3	MA-19642009AG0	1		Bracket, Weight
4	MA-19672007000	4	F	Plug
6	MA-F9450114035	2		Bolt
9		1		Cover Not used on this product
10	MA-19682016AG0	1		Cover
11		1		Bolt Not used on this product
12	MA-H1540108025	4		Bolt
13	MA-F9450112035	8		Bolt
15	MA-H1550112035	4		Bolt

www.mymowerparts.com

For Discount Cub Cadet Parts Call 606-678-9623 or 606-561-4983

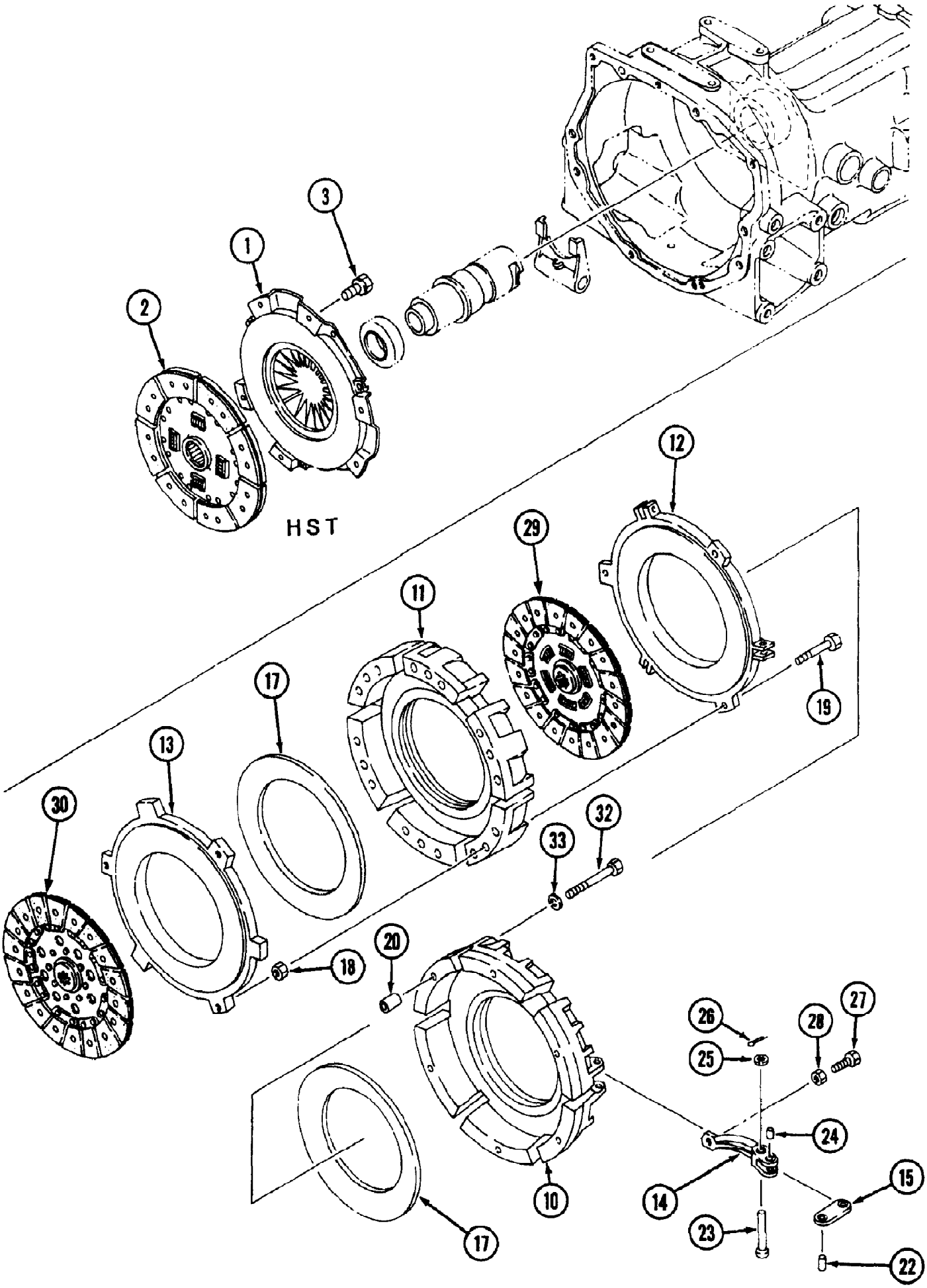

www.mymowerparts.com

For Discount Cub Cadet Parts Call 606-678-9623 or 606-561-4983

Ref #	Part Number	Qty	S/P/F	Description
1		1		Cover Ass'y. Not used on this product
2		1		Disc, Clutch Not used on this product
3		1		Bolt Not used on this product
	MA-19631114000	1		Clutch, Ass'y. Includes Items 10 - 30
10	MA-19631114110	1		Clutch, Cover
11	MA-19631114120	1		Clutch, Cover
12	MA-19631114130	1		Pressure Plate
13	MA-19631114140	1		Pressure Plate
14	MA-19631114150	3		Release Lever Sub Ass'y.
15	MA-19631114160	3		Release Rod Sub Ass'y.
17	MA-19631114170	2		Diaphragm Spring
18	MA-19631114180	3		Nut
19	MA-19631114190	3		Bolt
20	MA-19631114210	3		Knock Pin
22	MA-19631114220	3		Pin
23	MA-19631114230	3		Pin
24	MA-19631114240	3		Pin
25	MA-03500130815	3		Washer
26	MA-05200125016	3	S	Pin, Split
27	MA-19631114270	3		Adjust Bolt
28	MA-19631114280	3		Nut
29	MA-19631116000	1		Clutch Disc Ass'y.
30	MA-19631115000	1		Clutch Disc Ass'y.
32	MA-A0540108100	6		Bolt
33	MA-A3600100802	6		Washer

www.mymowerparts.com

For Discount Cub Cadet Parts Call 606-678-9623 or 606-561-4983

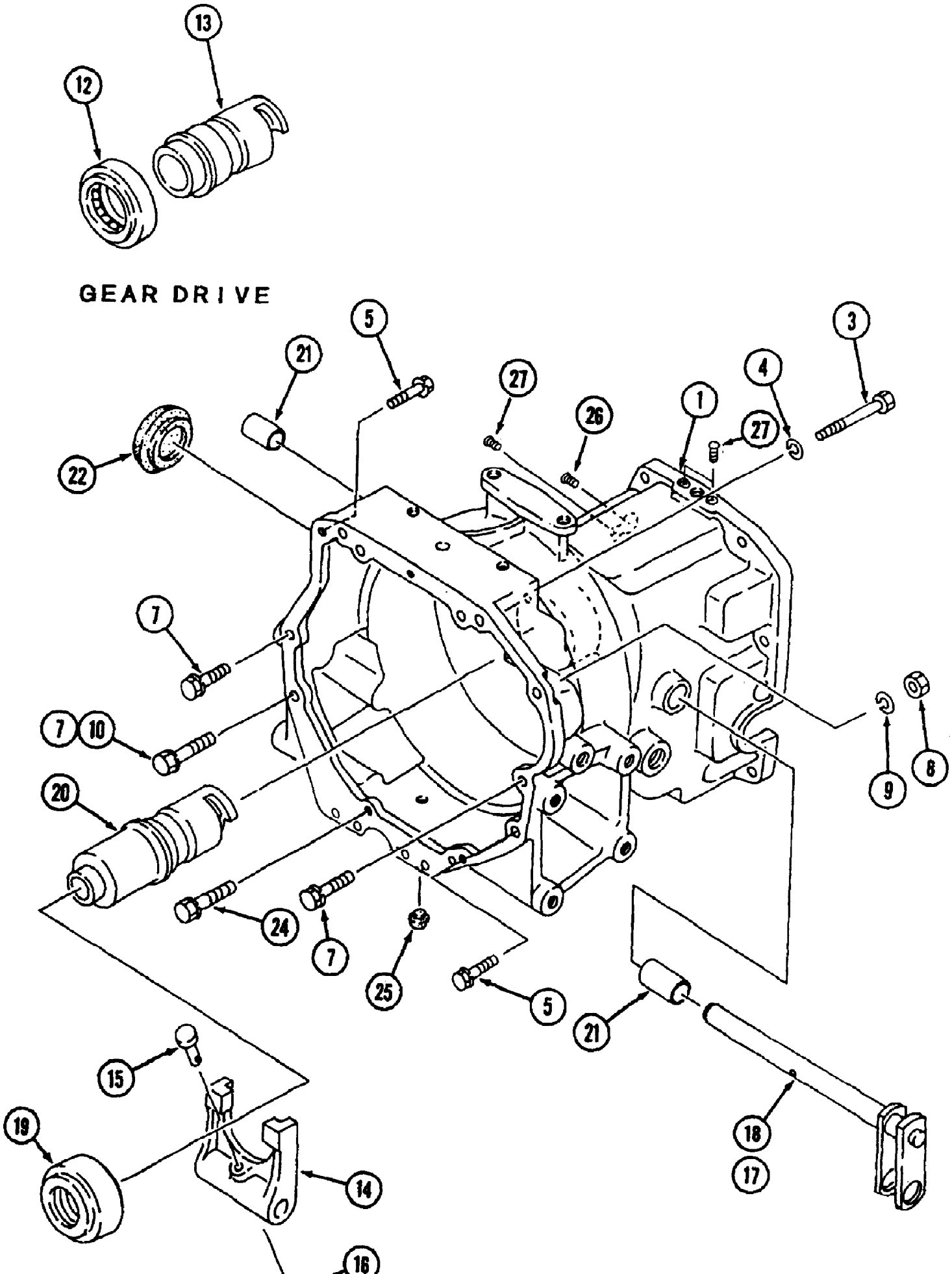

www.mymowerparts.com

For Discount Cub Cadet Parts Call 606-678-9623 or 606-561-4983

Ref #	Part Number	Qty	S/P/F	Description
1	MA-19681012AG1	1	/P	Housing, Clutch
3	MA-A0550112120	2		Bolt
4	MA-A3600101202	2		Washer
5	MA-F1550110025	2		Bolt
7	MA-F1550112030	4	/P	Bolt
8	MA-A3030110002	1		Nut
9	MA-A3600101002	1	/P	Washer
10		1		Bolt Not used on this product
12	MA-11801156000	1		Bearing, Release
13	MA-19631013000	1		Hub, Release
14	MA-19631016000	1		Lever, Release
15	MA-05621108040	1		Pin, Clevis
16	MA-05200125016	1	S	Pin, Split
17	MA-19641014AG0	1		Shaft, Release
18		1		Shaft, Release Not used on this product
19		1		Bearing Not used on this product
20		1		Hub, Release Not used on this product
21	MA-07972020150	2		Bushing
22	MA-13333103000	1		Cap
24	MA-F1550110020	1		Bolt
25	MA-27613733000	1		Cap
26	MA-11190573000	1		Plug
27	MA-05534-10000	3		Plug

www.mymowerparts.com

For Discount Cub Cadet Parts Call 606-678-9623 or 606-561-4983

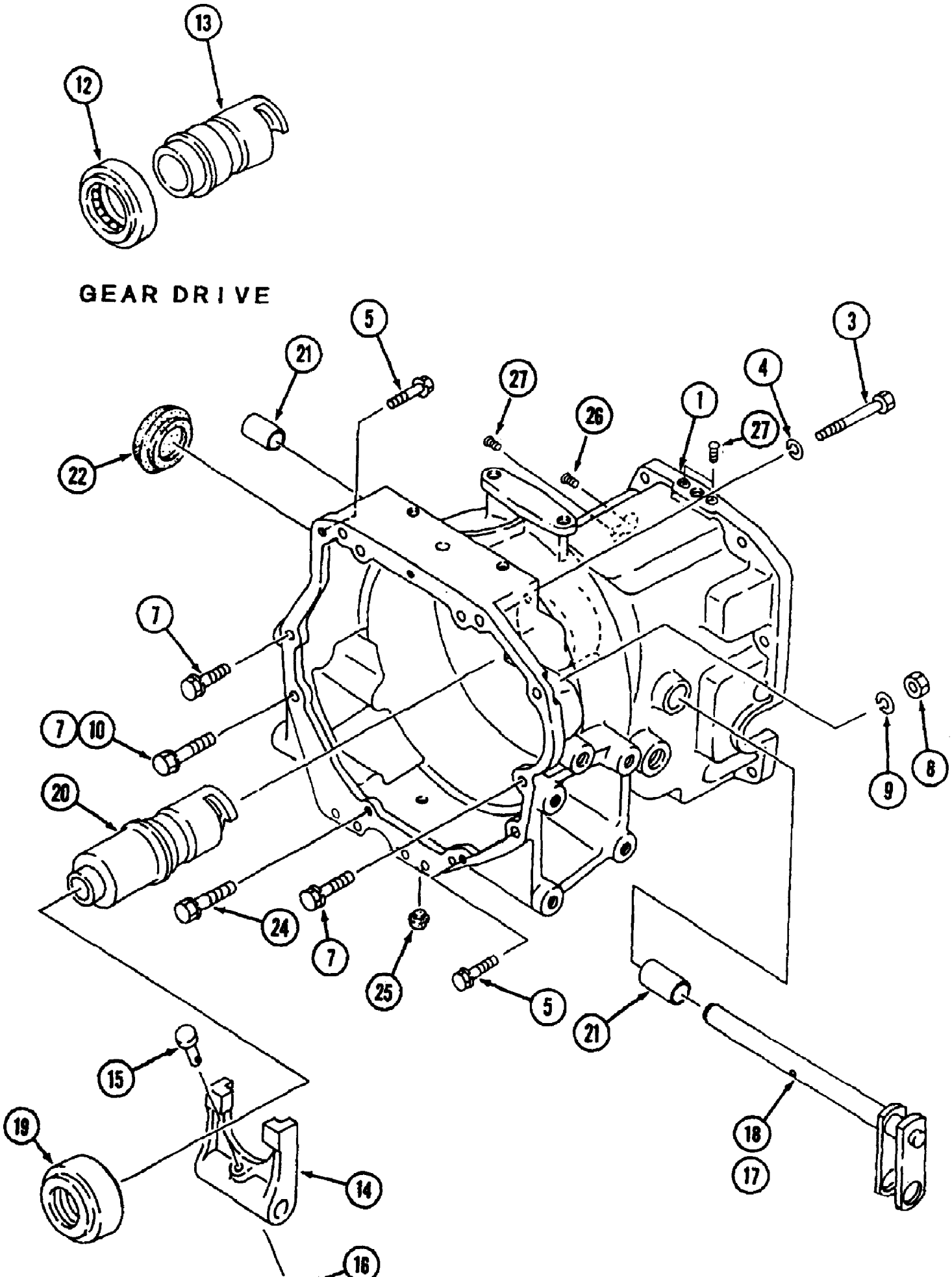

www.mymowerparts.com

For Discount Cub Cadet Parts Call 606-678-9623 or 606-561-4983

Ref #	Part Number	Qty	S/P/F	Description
1	MA-19681012AG1	1	/P	Housing, Clutch
3	MA-A0550112120	2		Bolt
4	MA-A3600101202	2		Washer
5	MA-F1550110025	2		Bolt
7	MA-F1550112030	4	/P	Bolt
8	MA-A3030110002	1		Nut
9	MA-A3600101002	1	/P	Washer
10		1		Bolt Not used on this product
12		1		Bearing, Release Not used on this product
13		1		Hub, Release Not used on this product
14	MA-19631016000	1		Lever, Release
15	MA-05621108040	1		Pin, Clevis
16	MA-05200125016	1	S	Pin, Split
17		1		Shaft, Release Not used on this product
18	MA-19631014AG0	1		Shaft, Release
19	MA-11761015000	1		Bearing
20	MA-19631015000	1		Hub, Release
21	MA-07972020150	2		Bushing
22	MA-13333103000	1		Cap
24	MA-F1550110020	1		Bolt
25	MA-27613733000	1		Cap
26		1		Plug Not used on this product
27	MA-05534-10000	2		Plug

www.mymowerparts.com

For Discount Cub Cadet Parts Call 606-678-9623 or 606-561-4983

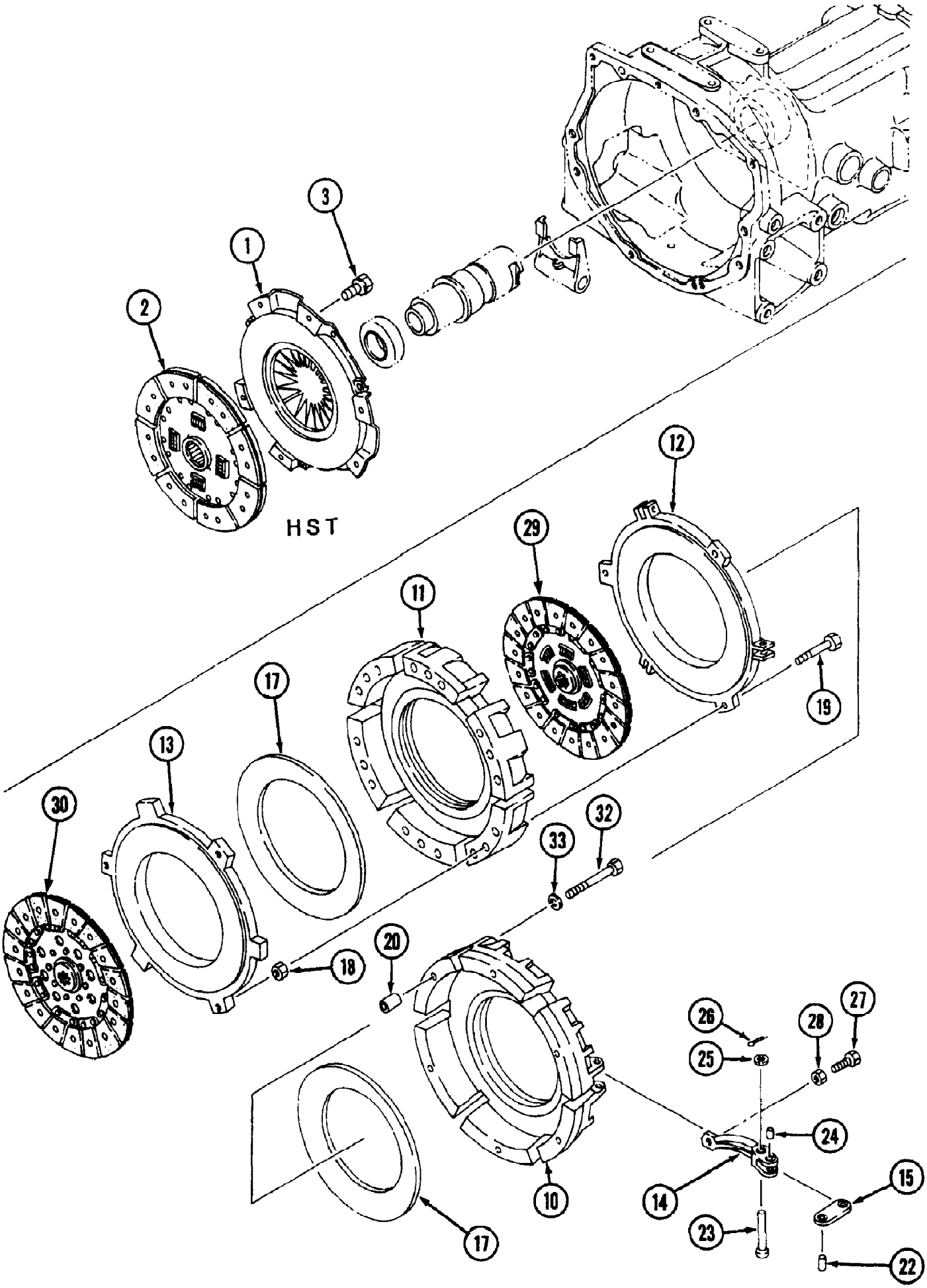

www.mymowerparts.com

For Discount Cub Cadet Parts Call 606-678-9623 or 606-561-4983

Ref #	Part Number	Qty	S/P/F	Description
1	MA-19641111000	1		Cover Ass'y.
2	MA-19641112000	1		Disc, Clutch
3	MA-F1540108020	6		Bolt
		1		Clutch, Ass'y. Includes Items 10 - 30; Not used on this product
10		1		Clutch, Cover Not used on this product
11		1		Clutch, Cover Not used on this product
12		1		Pressure Plate Not used on this product
13		1		Pressure Plate Not used on this product
14		1		Release Lever Sub Ass'y. Not used on this product
15		1		Release Rod Sub Ass'y. Not used on this product
17		1		Diaphragm Spring Not used on this product
18		1		Nut Not used on this product
19		1		Bolt Not used on this product
20		1		Knock Pin Not used on this product
22		1		Pin Not used on this product
23		1		Pin Not used on this product
24		1		Pin Not used on this product
25		1		Washer Not used on this product
26		1		Pin, Split Not used on this product
27		1		Adjust Bolt Not used on this product
28		1		Nut Not used on this product
29		1		Clutch Disc Ass'y. Not used on this product
30		1		Clutch Disc Ass'y. Not used on this product
32		1		Bolt Not used on this product
33		1		Washer Not used on this product

www.mymowerparts.com

For Discount Cub Cadet Parts Call 606-678-9623 or 606-561-4983

Cooling Parts 30 HP Engine (7300 S/N 21932-Lower/7305 S/N 23069-Lower)

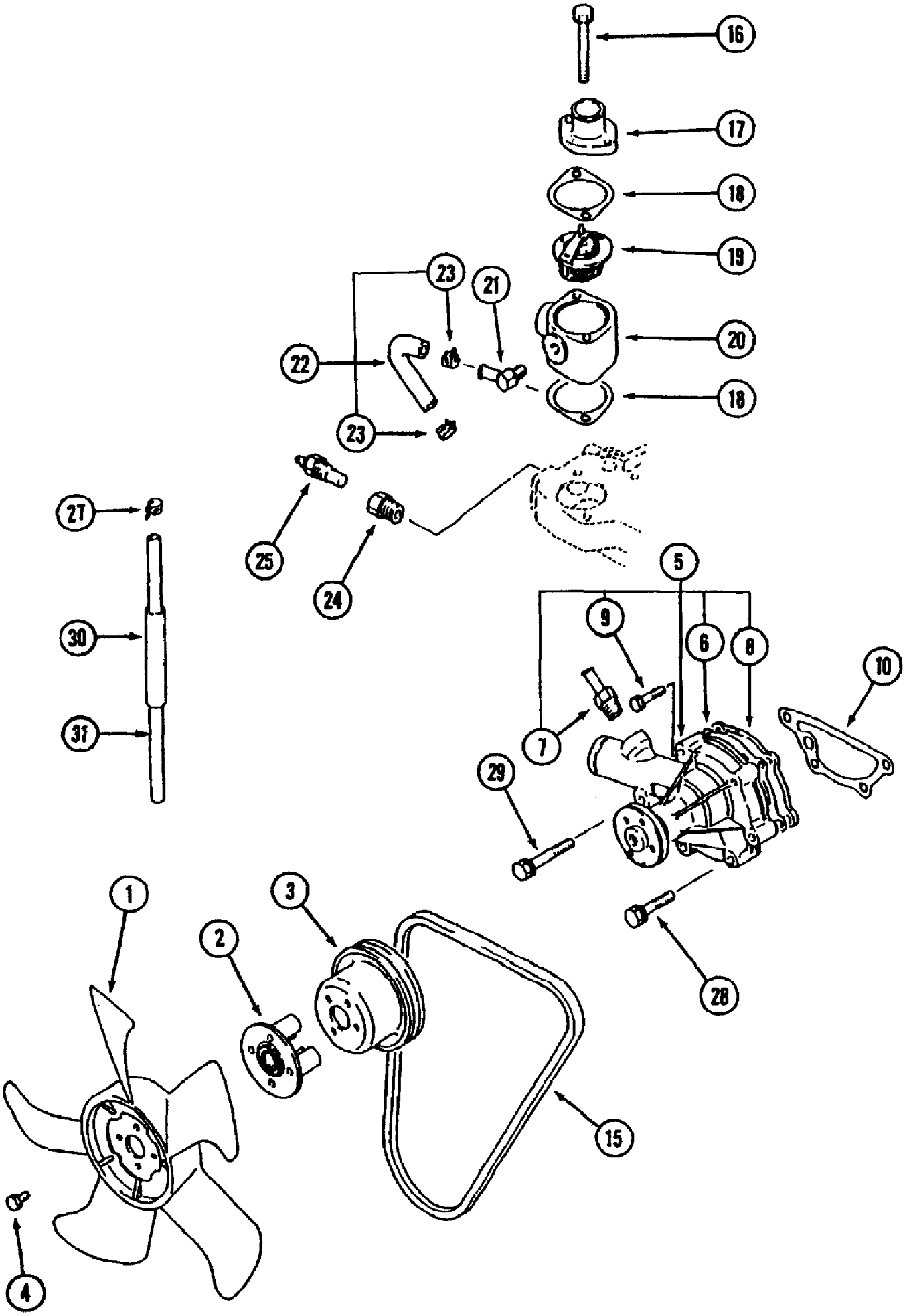

www.mymowerparts.com

For Discount Cub Cadet Parts Call 606-678-9623 or 606-561-4983

Cooling Parts 30 HP Engine (7300 S/N 21932-Lower/7305 S/N 23069-Lower)

Ref #	Part Number	Qty	S/P/F	Description
1	MA-MD009014	1	/P	Fan, Cooling
2	MA-MM434493	1		Spacer, Fan
3	MA-MM405460	1		Pulley, Water Pump
4	MA-MF241229	4		Bolt, W/Washer
5	MA-MM407402	1		Pump Ass'y., Water
6	MA-MM409326	1		Gasket, Water Pump
7	MA-MM409314	1		Joint, Water Pump
8	MA-MM409327	1		Plate, Water Pump
9	MA-MF240031	2		Bolt, W/Washer
10	MA-30H45-00101	1	/P	Gasket, Water Pump
15	MA-MD027458	1	F	V-Belt Used with MA-MM435752 Alternator.
	MA-MD041704	1	F	V-Belt Used with MA-30A68-00800 Alternator.
16	MA-MF241267	2		Bolt, W/Washer
17	MA-MM409313	1	S	Fitting, Water Outlet
18	MA-MD000551	2	S	Gasket
19	MA-30A46-00700	1	/P	Thermostat
20	MA-MM409334	1		Fitting, Thermostat
21	MA-MM409311	1		Joint, Water Hose
22	MA-MM409336	2		Hose Ass'y., Water Bypass
23	MA-MS660164	2		Clip, Hose
24	MA-MA604250	1	S	Joint, Gauge Unit
25	MA-MD001380	1		Gauge Unit, Water Temp
27	MA-MS660163	1		Clip, Hose
28	MA-MF244860	3	S	Bolt, Washer Ass'y.
29	MA-MF244863	1		Bolt, Washer Ass'y.
30	MA-MM43721501	1		Hose Rubber
31	MA-MS602095	1		Hose, Fuel

www.mymowerparts.com

For Discount Cub Cadet Parts Call 606-678-9623 or 606-561-4983

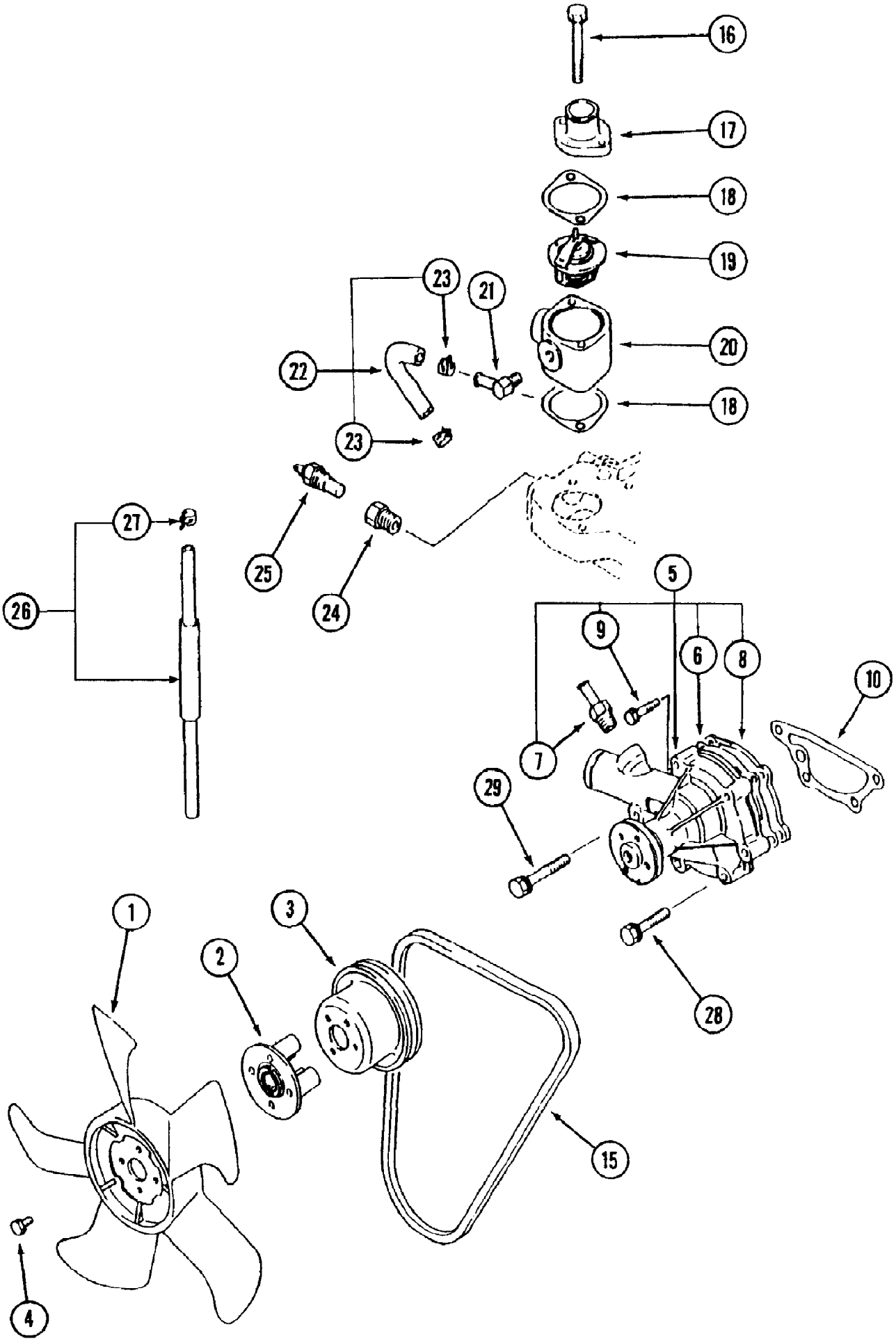

www.mymowerparts.com

For Discount Cub Cadet Parts Call 606-678-9623 or 606-561-4983

Cooling Parts 30HP Engine 7300 S/N 21933 & Up

Ref #	Part Number	Qty	S/P/F	Description
1	MA-MD009014	1	/P	Fan, Cooling
2	MA-MM434493	1		Spacer, Fan
3	MA-MM405460	1		Pulley, Water Pump
4	MA-MF241229	4		Bolt, w/Washer
5	MA-MM407402	1		Pump Ass'y., Water
6	MA-MM409326	1		Gasket, Water Pump
7	MA-MM409314	1		Joint, Water Pump
8	MA-MM409327	1		Plate, Water Pump
9	MA-MF240031	2		Bolt, w/Washer
10	MA-30H45-00101	1	/P	Gasket, Water Pump
15	MA-MD041704	1		V-Belt
16	MA-MF241267	2		Bolt, w/Washer
17	MA-MM409313	1	S	Fitting, Water Outlet
18	MA-MD000551	2	S	Gasket
19	MA-30A46-00700	1	/P	Thermostat
20	MA-MM409334	1		Fitting, Thermostat
21	MA-MM409311	1		Joint, Water Hose
22	MA-MM409336	2		Hose Ass'y., Water Bypass
23	MA-MS660164	2		Clip, Hose
24	MA-MA604250	1	S	Joint, Gauge Unit
25	MA-MD001380	1		Gauge Unit, Water Temp
26	MA-30A46-00501	1		Hose Ass'y., Water Drain
27	MA-MS660163	1		Clip, Hose
28	MA-MF244860	3	S	Bolt, Washer Ass'y.
29	MA-MF244863	1		Bolt, Washer Ass'y.

www.mymowerparts.com

For Discount Cub Cadet Parts Call 606-678-9623 or 606-561-4983

Crankcase 30 HP Engine (7300 S/N 21932 & Lower/7305 S/N 23069 & Lower)

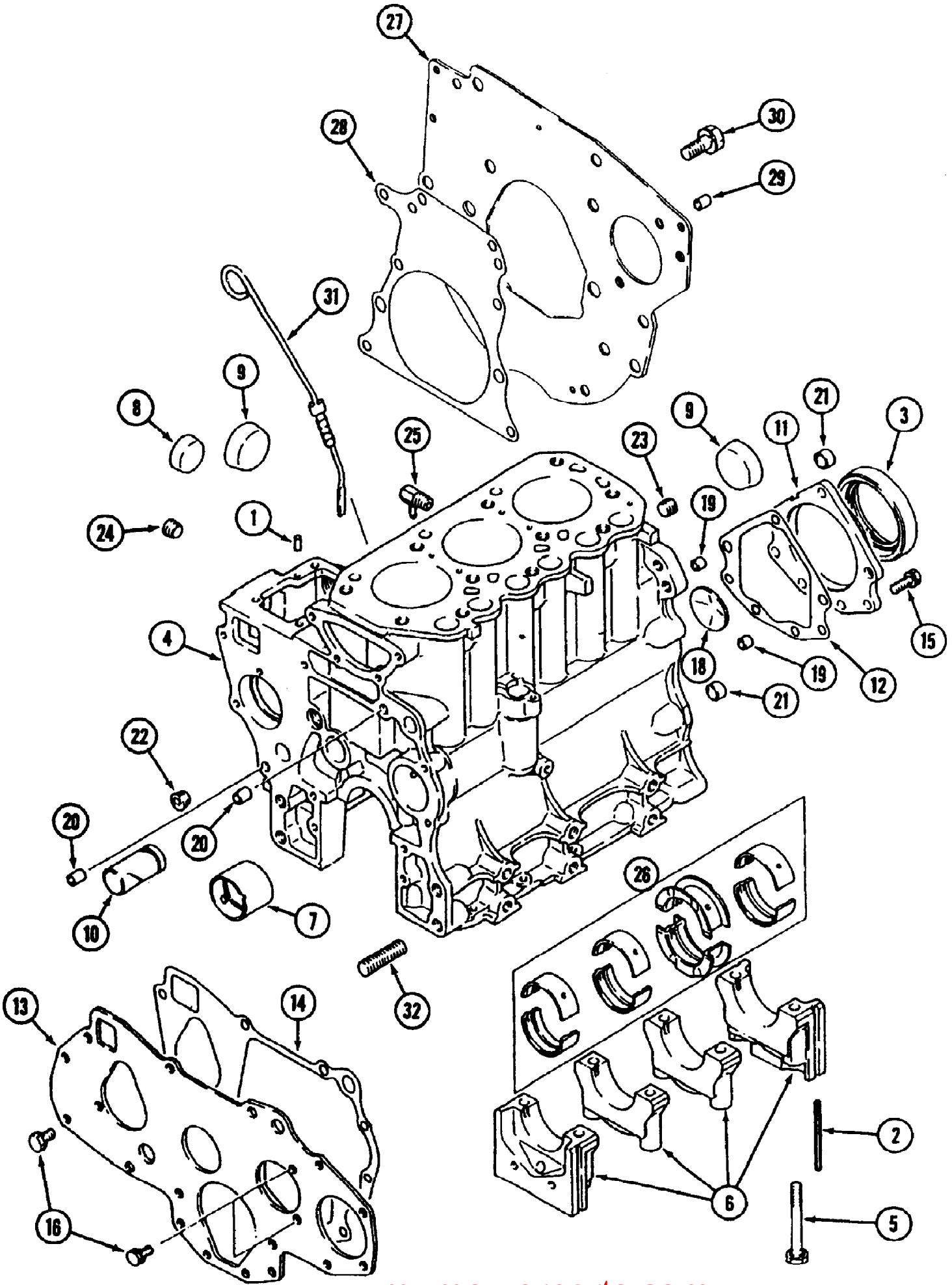

www.mymowerparts.com

For Discount Cub Cadet Parts Call 606-678-9623 or 606-561-4983

Crankcase 30 HP Engine (7300 S/N 21932 & Lower/7305 S/N 23069 & Lower)

Ref #	Part Number	Qty	S/P/F	Description
1	MA-MM409645	2		Pin, Dowel
2	MA-MM406228	4		Seal, Side
3	MA-MM406242	1		Oil Seal
4	MA-MM430187	1	/P	Block Sub Ass'y., Cylinder Includes Items 4 - 9
5	MA-MM406217	8		Bolt, Bearing Cap
6		1		Cap Ass'y., Bearing Part of Cylinder Block Sub Assembly.
7	MA-MM406237	1		Bush, Camshaft
8	MA-MD000245	1	S	Plug, Expansion
9	MA-MF665543	2	S	Cap, Sealing
10	MA-MM430113	1		Shaft, Idler
11	MA-WM412662	1		Case, Oil Seal
12	MA-30H07-00201	1	/P	Gasket, Oil Seal
13	MA-MM406264	1		Plate, Front
14	MA-30H07-00300	1		Gasket, Front Plate
15	MA-MF240054	7		Bolt, W/Washer
16	MA-MF240051	3		Bolt, W/Washer
18	MA-MF665512	1	S	Plug, Expansion
19	MA-MS471104	2		Bushing, Knock
20	MA-MS471105	2		Bushing, Knock
21	MA-MS471110	2		Bushing, Knock
22	MA-MS661142	1		Plug, Taper
23	MA-MD040338	1		Plug, Taper
24	MA-MS661141	1		Plug, Taper
25	MA-MM408260	1	S	Joint, Water Drain
26	MA-MM438660	1	S	Bearing Set, Crankshaft STD
	MA-MM438661	1		Bearing Set, Crankshaft 0.25 US
	MA-MM438662	1		Bearing Set, Crankshaft 0.50 US
	MA-MM438663	1		Bearing Set, Crankshaft 0.75 US
27	MA-30H12-00200	1	S	Plate, Rear
28	MA-30H12-00101	1	/P	Gasket, Rear Plate
29	MA-MM408240	2		Pin, Knock
30	MA-MF241308	6	S	Bolt, W/Washer
31	MA-30H42-00100	1		Gauge, Oil Level
32	MA-MF402635	2		Stud

www.mymowerparts.com

For Discount Cub Cadet Parts Call 606-678-9623 or 606-561-4983

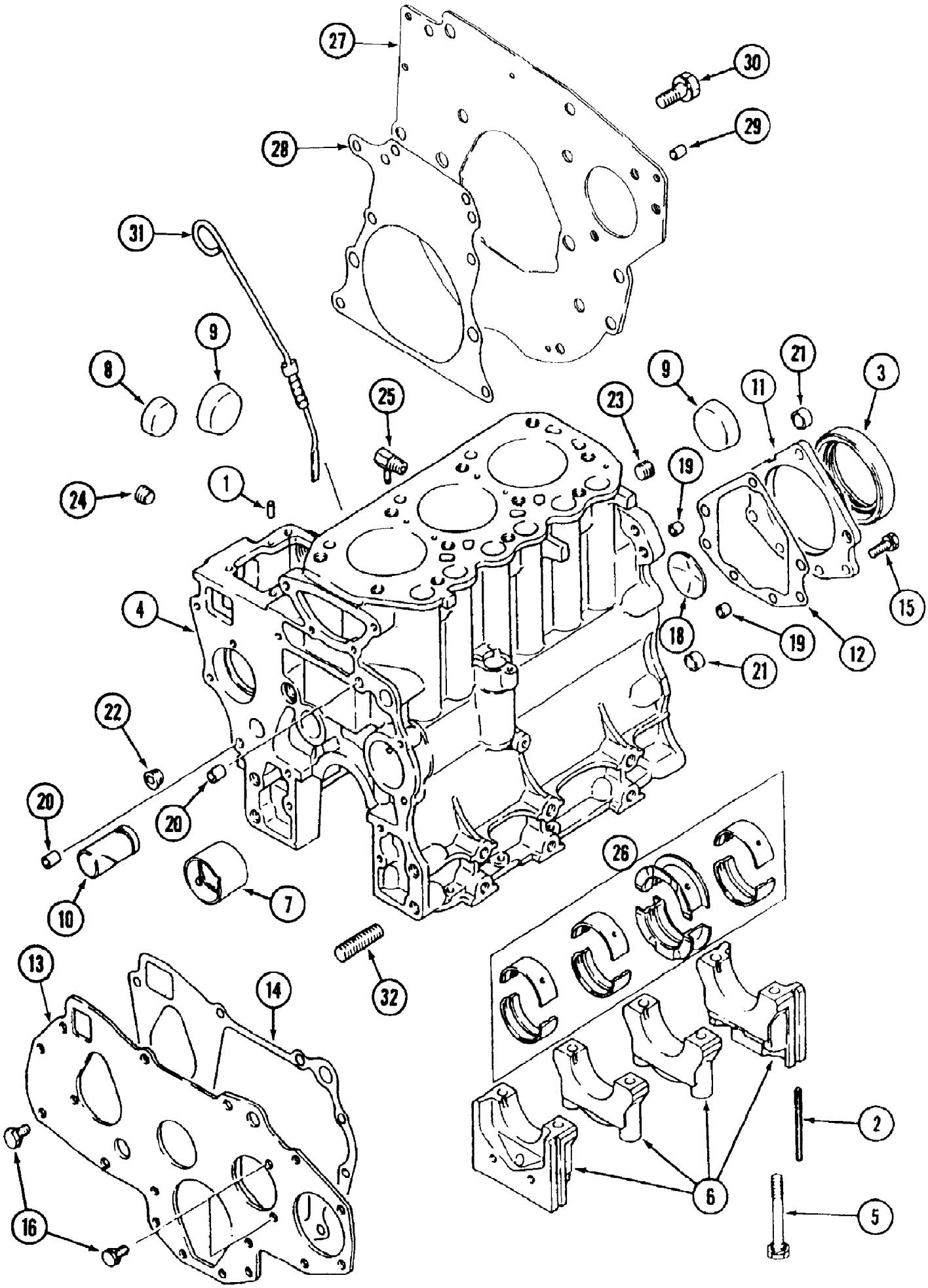

www.mymowerparts.com

For Discount Cub Cadet Parts Call 606-678-9623 or 606-561-4983

Ref #	Part Number	Qty	S/P/F	Description
1	MA-MM409645	2		Pin, Dowel
2	MA-MM406228	4		Seal, Slide
3	MA-MM406242	1		Oil Seal
4	MA-MM430187	1	/P	Block Sub Ass'y., Cylinder Includes items 4-9
5	MA-MM406217	8		Bolt, Bearing Cap
6		1		Cap Ass'y., Bearing
7	MA-MM406237	1		Bushing
8	MA-MD000245	1	S	Cap, Sealing
9	MA-MF665543	2	S	Cap, Sealing
10	MA-MM430113	1		Shaft, Idler
11	MA-MM412662	1		Case, Oil Seal
12	MA-30H07-00201	1	/P	Gasket, Oil Seal
13	MA-MM406264	1		Plate, Frame
14	MA-30H07-00300	1		Gasket, Front Plate
15	MA-MF240054	7		Bolt, w/Washer
16	MA-MF240051	3		Bolt, w/Washer
18	MA-MF665512	1	S	Plug, Expansion
19	MA-MS471104	2		Bushing
20	MA-MS471105	2		Bushing, Knock
21	MA-MS471110	2		Bushing, Knock
22	MA-MS661142	1		Plug, Taper
23	MA-MD040338	1		Plug, Taper
24	MA-MS661141	1		Plug, Taper
25	MA-31A46-02300	1	/P	Joint
26	MA-MM438660	1	S	Bearing Set, Crankshaft STD
	MA-MM438661	1		Bearing Set, Crankshaft 0.25 US
	MA-MM438662	1		Bearing Set, Crankshaft 0.50 US
	MA-MM438663	1		Bearing Set, Crankshaft 0.75 US
27	MA-30H12-00200	1	S	Plate, Rear
28	MA-30H12-00100	1	S	Gasket, Rear Plate
29	MA-MM408240	2		Pin, Knock
30	MA-MF241308	6	S	Bolt, w/Washer
31	MA-30H42-00100	1		Gauge, Oil Level
32	MA-MF402635	2		Stud

www.mymowerparts.com

For Discount Cub Cadet Parts Call 606-678-9623 or 606-561-4983

Cyl Head Gear Drive 30HP Eng 7300 SN 21932-Lower/7305 SN 23069-Lower

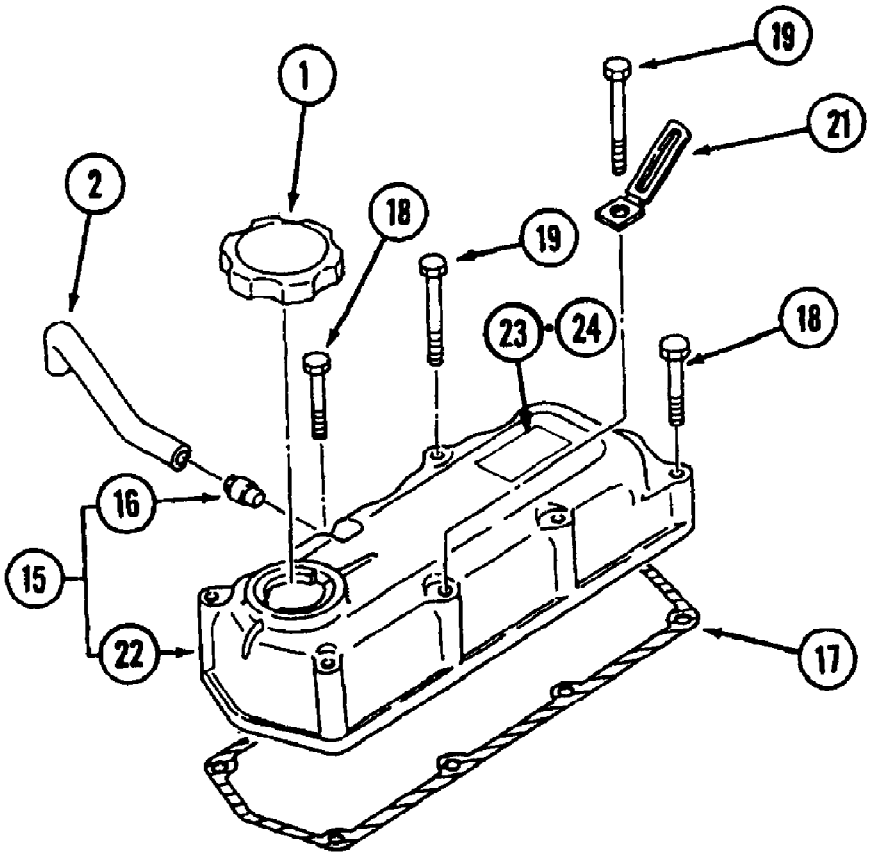

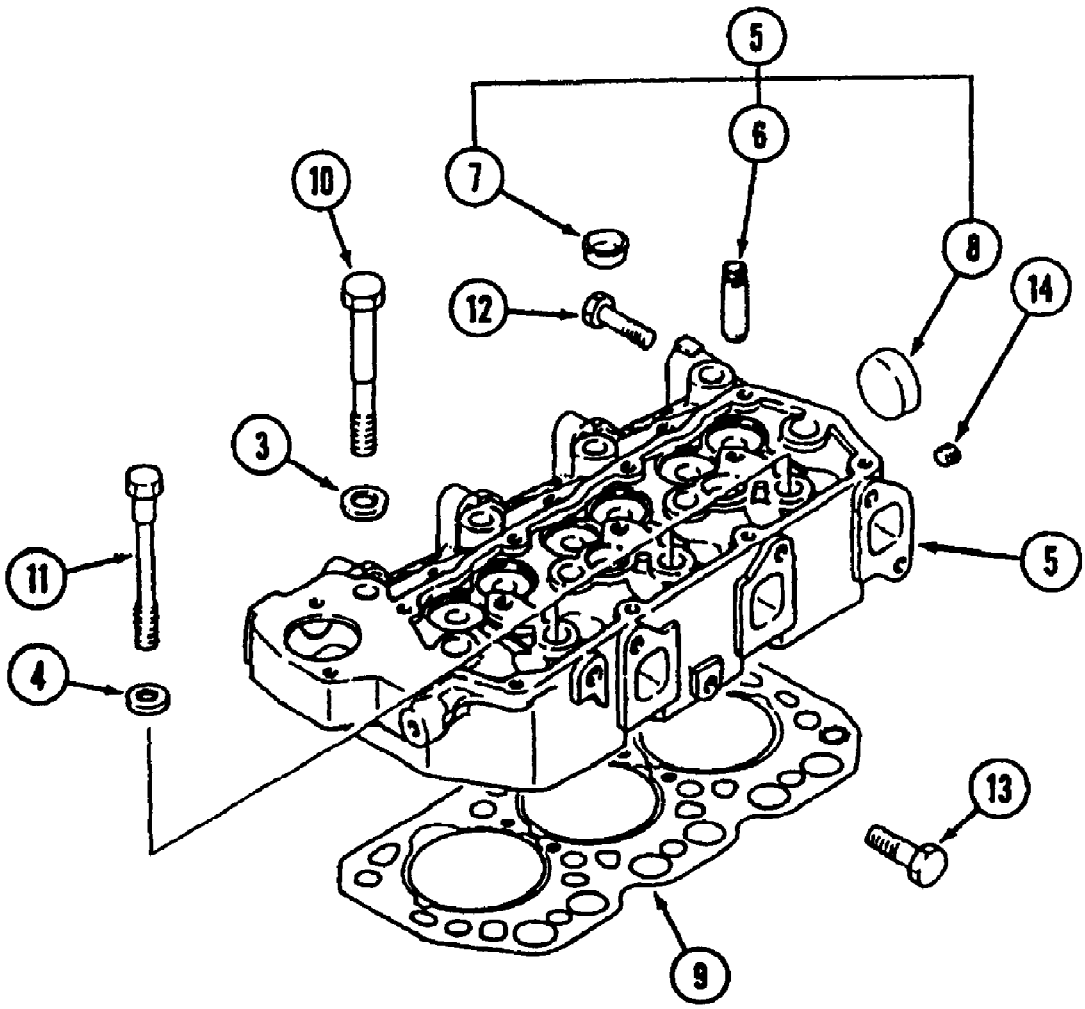

www.mymowerparts.com

For Discount Cub Cadet Parts Call 606-678-9623 or 606-561-4983

Cyl Head Gear Drive 30HP Eng 7300 SN 21932-Lower/7305 SN 23069-Lower

Ref #	Part Number	Qty	S/P/F	Description
1	MA-MD008784	1		Cap, Oil Filter
2	MA-MM438850	1	/P	Pipe, Air Breather
3		1		UNKNOWN
4		1		UNKNOWN
5	MA-30H01-00010	1		Head Ass'y., Cylinder
6	MA-MM435275	10	S	Guide, Valve
7	MA-MF665538	2	S	Cap, Sealing
8	MA-MD000427	1	S	Cap, Sealing
9	MA-30H01-00300	1	/P	Gasket, Cylinder Head
10	MA-30A01-03300	3		Bolt, Cylinder Head
11	MA-30A01-03200	8		Bolt, Cylinder Head
12	MA-MF106091	1		Bolt
13	MA-MF101316	1		Bolt
14	MA-MS661140	1		Plug, Taper
15	MA-30H04-00010	1		Cover Ass'y., Rocker
16	MA-K9644171	1		Pipe
17	MA-30H04-00100	1	S	Gasket, Rocker Cover
18	MA-MF100065	3		Bolt
19	MA-MF100069	5	S	Bolt
21	MA-MS470058	1		Clip
22		1		Cover, Rocker
23	MA-30H04-02100	1	S	Label, Model
24		1		Label, Model Not used on this product

www.mymowerparts.com

For Discount Cub Cadet Parts Call 606-678-9623 or 606-561-4983

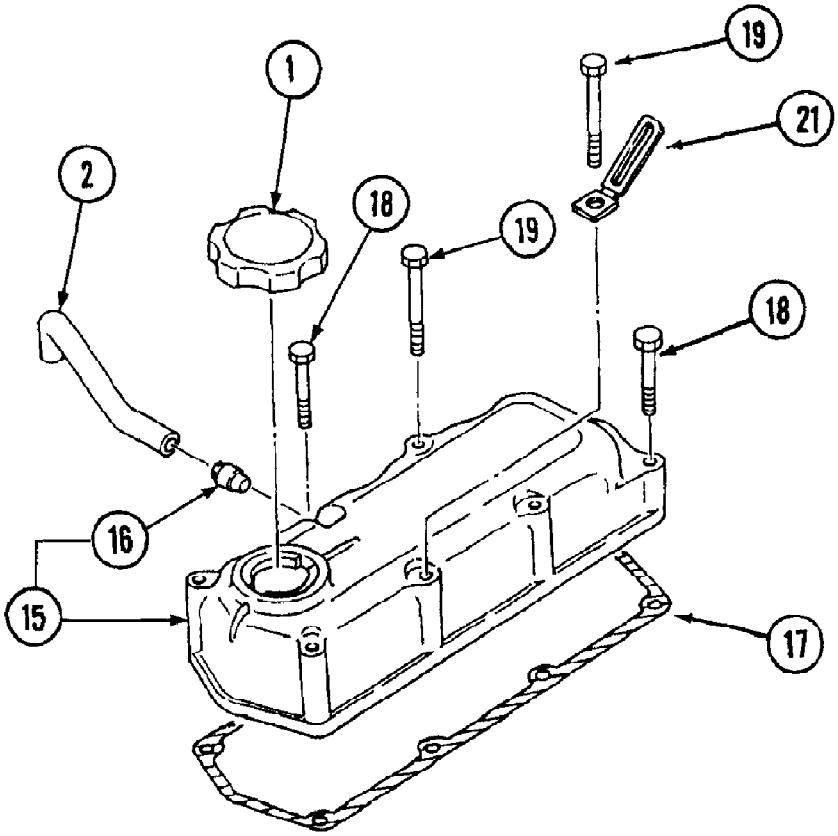

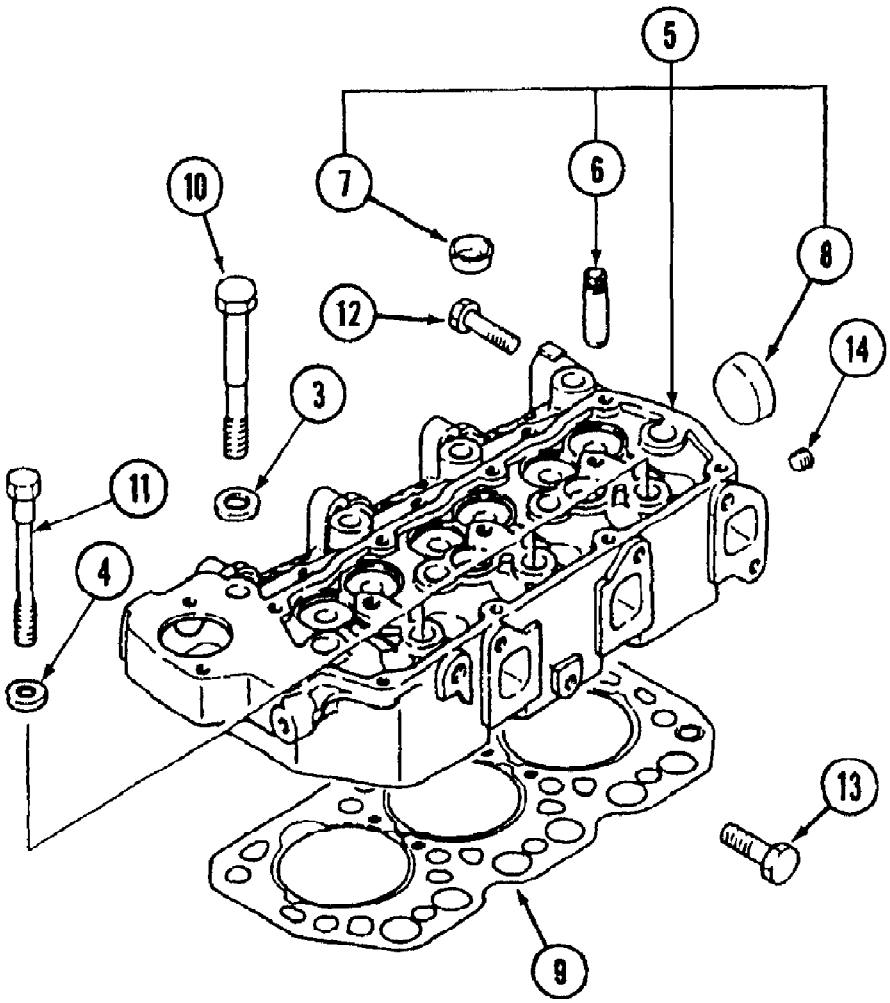

www.mymowerparts.com

For Discount Cub Cadet Parts Call 606-678-9623 or 606-561-4983

Cylinder Head 30HP Engine 7300 S/N 21933 & Up

Ref #	Part Number	Qty	S/P/F	Description
1	MA-MD008784	1		Cap, Oil Filler
2	MA-MM438850	1	/P	Pipe, Air Breather
3		1		UNKNOWN
4		1		UNKNOWN
5	MA-30H01-00010	1		Head Ass'y., Cylinder
6	MA-MM435275	6	S	Guide, Valve
7	MA-MF665538	2	S	Cap, Sealing
8	MA-MD000427	1	S	Cap, Sealing
9	MA-30H01-00300	1	/P	Gasket, Cylinder Head
10	MA-30A01-03300	3		Bolt, Cylinder Head
11	MA-30A01-03200	8		Bolt, Cylinder Head
12	MA-MF106091	1		Bolt
13	MA-MF101316	1		Bolt
14	MA-MS661140	1		Plug, Taper
15	MA-30H04-00010	1		Cover Ass'y., Rocker
16		1		Pipe
17	MA-30H04-00100	1	S	Gasket, Rocker Cover
18	MA-MF100065	3		Bolt
19	MA-MF100069	5	S	Bolt
21	MA-MS470059	1		Clip

www.mymowerparts.com

For Discount Cub Cadet Parts Call 606-678-9623 or 606-561-4983

Cylinder Head HST 30 HP Eng (7300 SN 21932-Lower/7305 SN 23069-Lower)

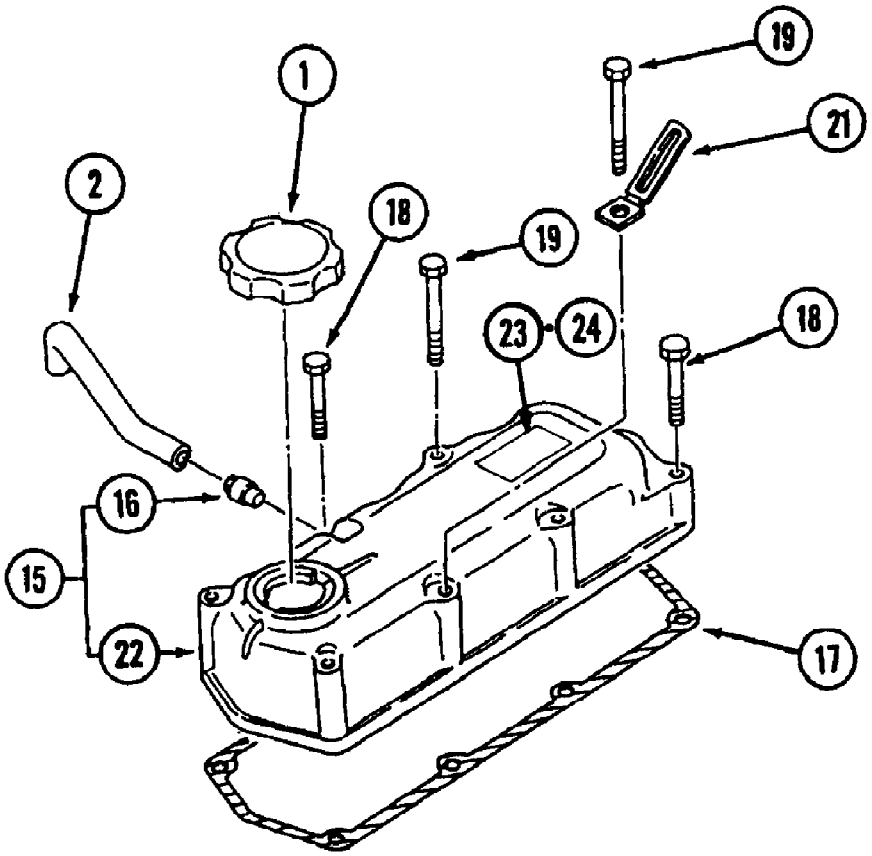

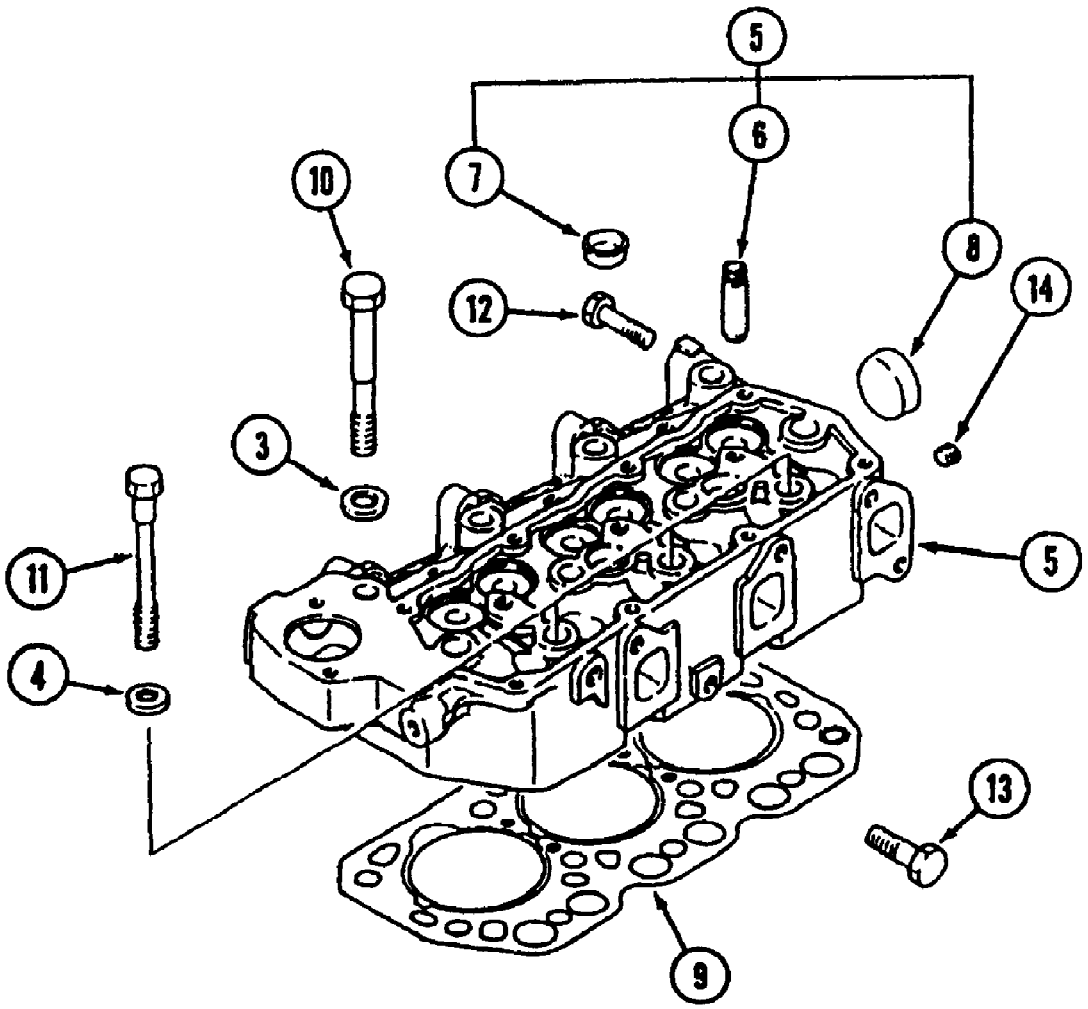

www.mymowerparts.com

For Discount Cub Cadet Parts Call 606-678-9623 or 606-561-4983

Cylinder Head HST 30 HP Eng (7300 SN 21932-Lower/7305 SN 23069-Lower)

Ref #	Part Number	Qty	S/P/F	Description
1	MA-MD008784	1		Cap, Oil Filler
2	MA-MM438850	1	/P	Pipe, Air Breather
3		1		UNKNOWN
4		1		UNKNOWN
5	MA-30H01-00010	1		Head Ass'y., Cylinder
6	MA-MM435275	10	S	Guide, Valve
7	MA-MF665538	2	S	Cap, Sealing
8	MA-MD000427	1	S	Cap, Sealing
9	MA-30H01-00300	1	/P	Gasket, Cylinder Head
10	MA-30A01-03300	3		Bolt, Cylinder Head
11	MA-30A01-03200	8		Bolt, Cylinder Head
12	MA-MF106091	1		Bolt
13	MA-MF101316	1		Bolt
14	MA-MS661140	1		Plug, Taper
15	MA-30H04-00010	1		Cover Ass'y.,Rocker
16	MA-K9644171	1		Pipe
17	MA-30H04-00100	1	S	Gasket, Rocker Cover
18	MA-MF100065	3		Bolt
19	MA-MF100069	5	S	Bolt
21	MA-MS470058	1		Clip
22		1		Cover, Rocker
23		1		Label, Model Not used on this product
24	MA-30H04-02200	1	S	Label, Model

www.mymowerparts.com

For Discount Cub Cadet Parts Call 606-678-9623 or 606-561-4983

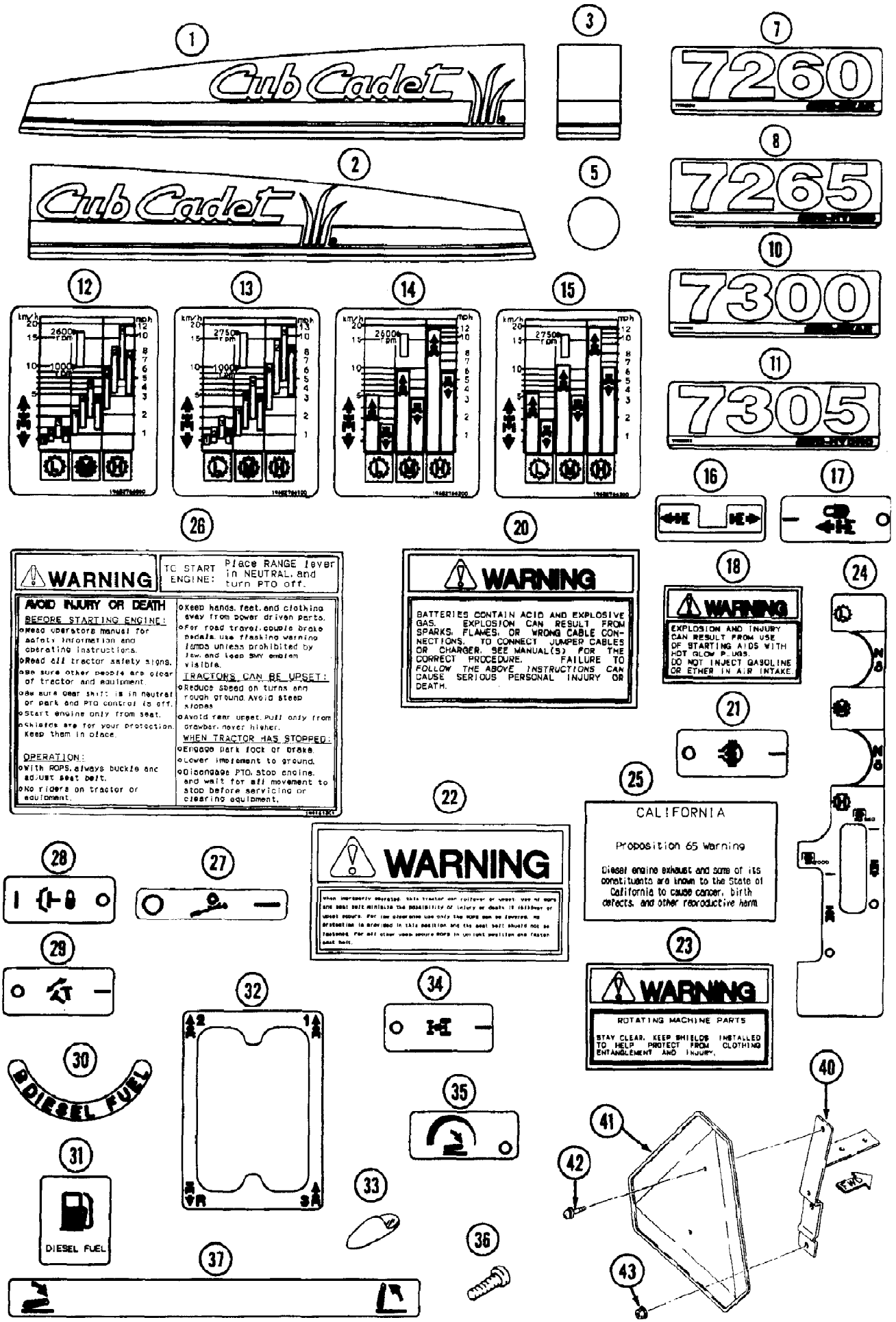

www.mymowerparts.com

For Discount Cub Cadet Parts Call 606-678-9623 or 606-561-4983

Ref #	Part Number	Qty	S/P/F	Description
	MA-19682751001	1		Label Kit, Side L.H. Includes items 1,3
1	MA-19672708001	1	/P	Label, Side L.H.
	MA-19682755001	1		Label Kit, Side R.H. Includes items 2,3
2	MA-19672709001	1	/P	Label, Side R.H.
3	MA-19682752000	2		Label, Rear
5	MA-19042711001	1		Label, Strg
7		1		Label, Model 7260 Not used on this product
8		1		Label, Model 7265 Not used on this product
10	MA-19682777000	2		Label, Model 7300
11	MA-19682778000	2		Label, Model 7305
12		1		Label, Speed G Not used on this product
13	MA-19682766100	1		Label, Speed G
14		1		Label, Speed H Not used on this product
15	MA-19682766300	1		Label, Speed H
16	MA-19632727000	1		Label, HST Control
17	MA-19632732000	1		Label, SP Control
18	MA-19042746000	1		Label, Warning
20	MA-19042759000	1		Label, Warning
21	MA-19632718000	1		Label, Diff. Lock
22	MA-19042765001	1		Label, Warning
23	MA-19042761000	1		Label, Warning
24	MA-19642715000	1		Mark Range
25	MA-19672725000	1		Label, Proposition 65
26	MA-19632737000	1		Label, Warning
27	MA-19672718000	1		Label, Brake
28	MA-19632721000	1		Label, Declutch
29	MA-19632722000	1		Label, Tilt
30	MA-19672727000	1		Mark Fuel
31	MA-19672728000	1		Mark Fuel
32	MA-19642714000	1		Label, Main
33	MA-10382767000	1		Mark Center
34	MA-19632731000	1		Label, MFD
35	MA-19632723000	1		Label, DRC
36	MA-04322104006	1		Screw
37	MA-19642781000	1		Label, Position
40	MA-19632881BD0	1		Plate, SMV
41	779-3618	1	S	Emblem, SMV
42	MA-H2420106016	2		Screw
43	MA-F3010108001	2		Nut

www.mymowerparts.com

For Discount Cub Cadet Parts Call 606-678-9623 or 606-561-4983

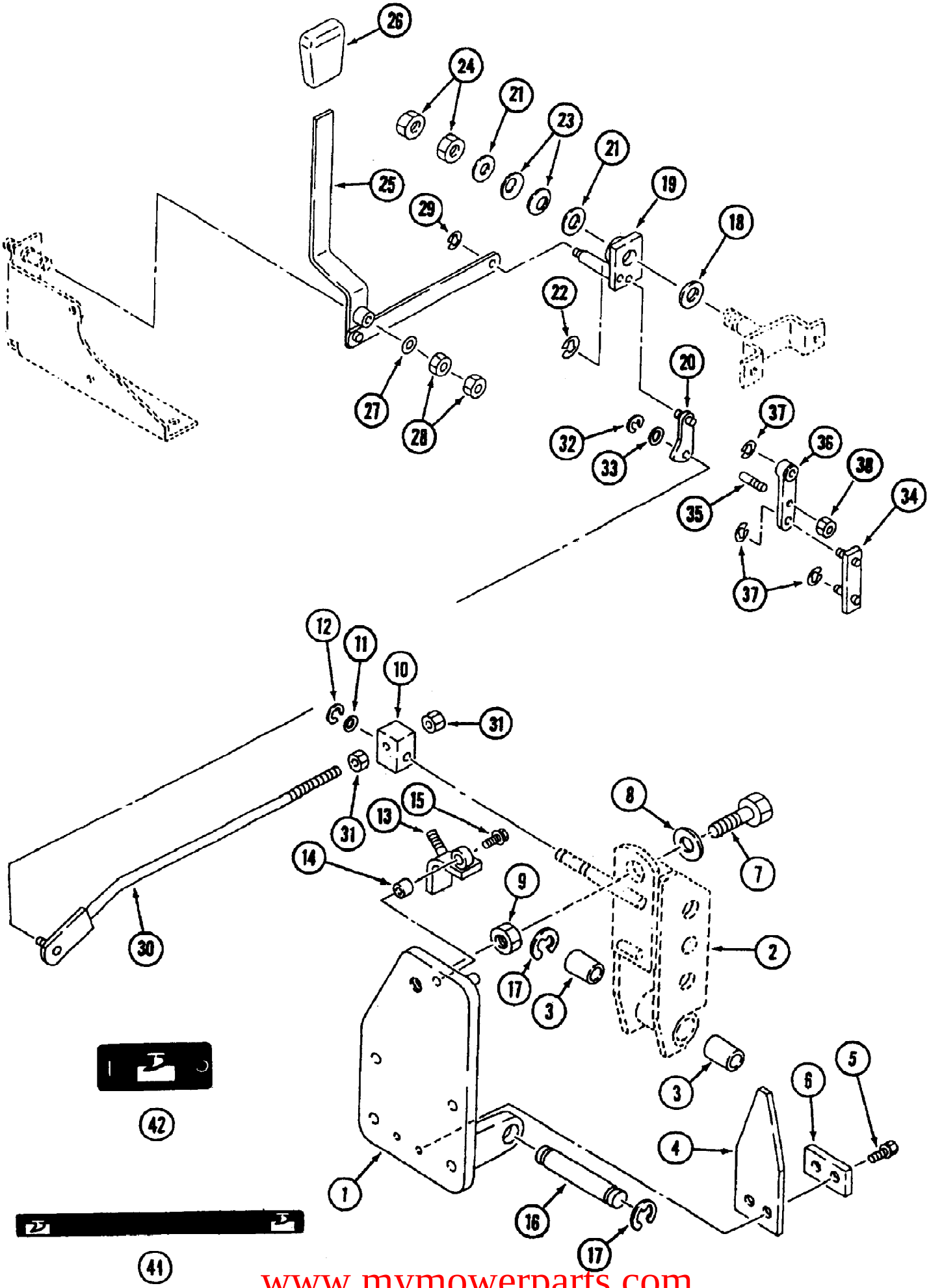

www.mymowerparts.com

For Discount Cub Cadet Parts Call 606-678-9623 or 606-561-4983

Ref #	Part Number	Qty	S/P/F	Description
1	MA-19842435AG0	1		Bracket
2	MA-19842436AG0	1		Bracket, Toplink
3	MA-07961020300	2		Bushing
4	MA-19962404AG0	1	/P	Spring, Leaf
5	MA-F1550110035	2		Bolt
6	MA-19962405AG0	1		Plate
7	MA-A0550116060	1		Bolt
8	MA-03500151632	1	/P	Washer
9	MA-A3030116002	1		Nut
10	MA-19842429000	1		Block
11	MA-03500141022	1		Washer
12	MA-07420100800	1		Ring
13	MA-19852411AG0	1		Stopper
14	MA-67700-26000	1		Collar
15	MA-H1540108020	1		Bolt
16	MA-11742453000	1		Pin
17	MA-07420101500	2	S	Ring
18	MA-19642468000	1		Sheet
19	MA-19642469000	1		Arm, Draft
20	MA-19642471000	1		Link, Draft
21	MA-03500162040	2		Washer
22	MA-07420100600	1		Ring
23	MA-03560102001	2		Spring
24	MA-A3030120003	2		Nut
25	MA-19642473AG0	1		Lever, D/C Ass'y.
26	MA-11742449000	1		Grip
27	MA-03500150822	1		Washer
28	MA-A3010108002	2		Nut
29	MA-07420100600	1		Ring
30	MA-19642477000	1		Rod Draft
31	MA-A3030110002	2		Nut
32	MA-07420100800	1		Ring
33	MA-03500141022	1		Washer
34	MA-19642478000	1		Link
35	MA-19292163000	1		Bolt
36	MA-19682429AG0	1		Arm, Select
37	MA-07420100600	3		Ring
38	MA-A3010108002	1		Nut
41	MA-19642782000	1		Label, Draft
42	MA-19642785000	1		Label, D.Lock

www.mymowerparts.com

For Discount Cub Cadet Parts Call 606-678-9623 or 606-561-4983

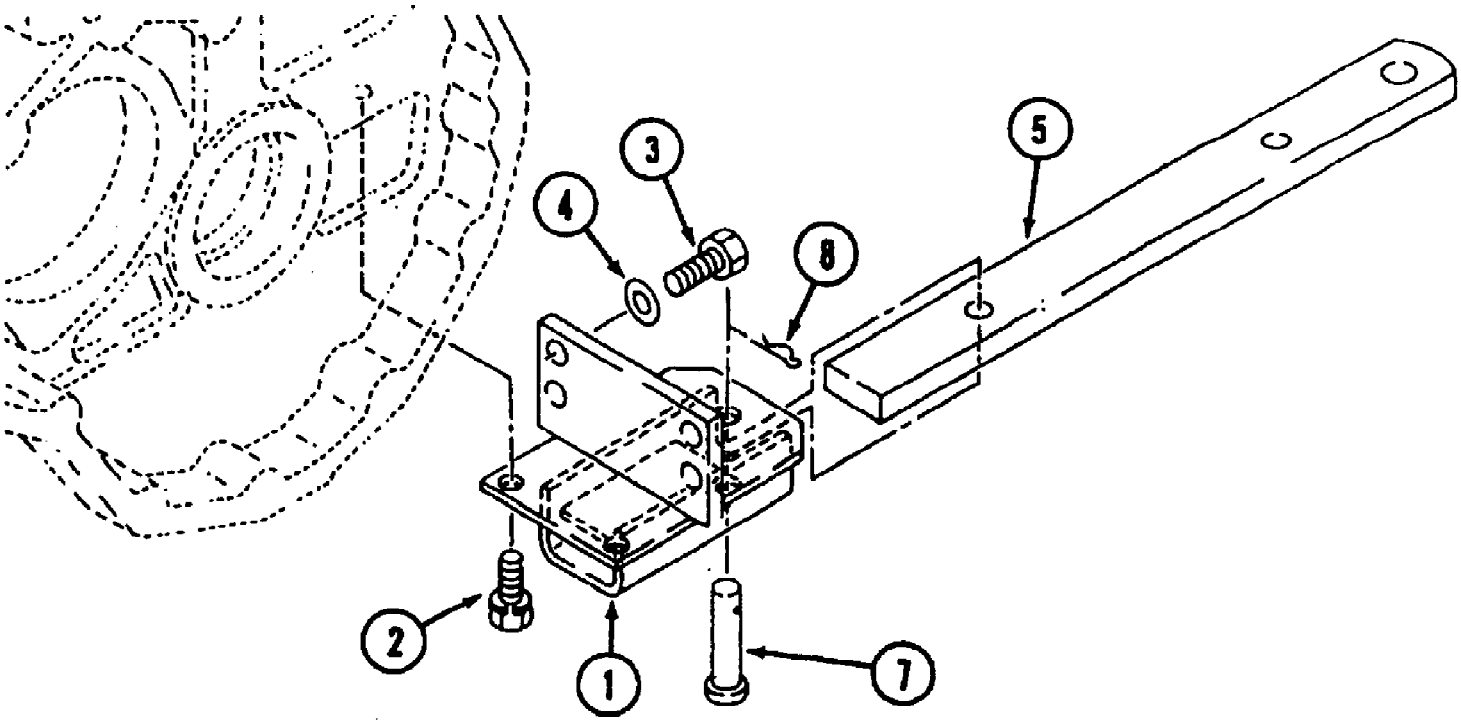

www.mymowerparts.com

For Discount Cub Cadet Parts Call 606-678-9623 or 606-561-4983

Ref #	Part Number	Qty	S/P/F	Description
1	MA-19633101AG0	1		Bracket
2	MA-F1540112030	2		Bolt
3	MA-A0400114035	4		Bolt
4	MA-03550161428	4		Washer
5	MA-19633102AG0	1		Drawbar
7	MA-05620116070	1		Pin, Clevis
8	MA-05210116000	1		Pin, Snap

www.mymowerparts.com

For Discount Cub Cadet Parts Call 606-678-9623 or 606-561-4983

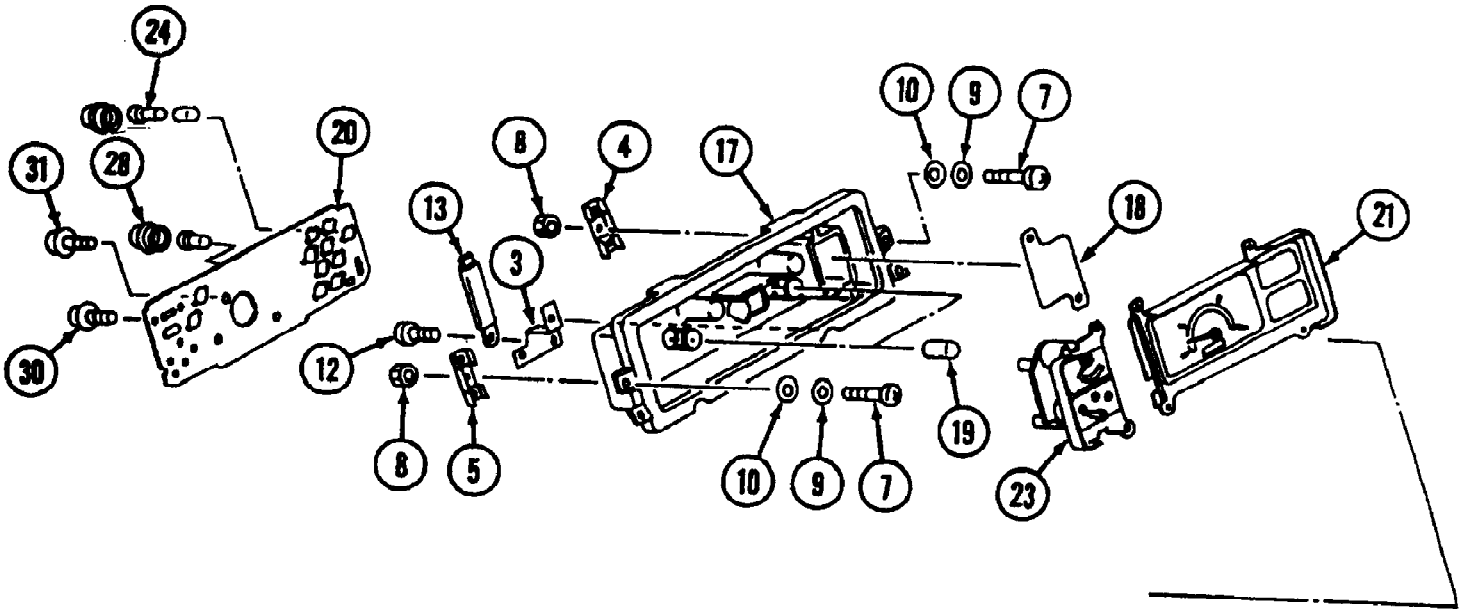

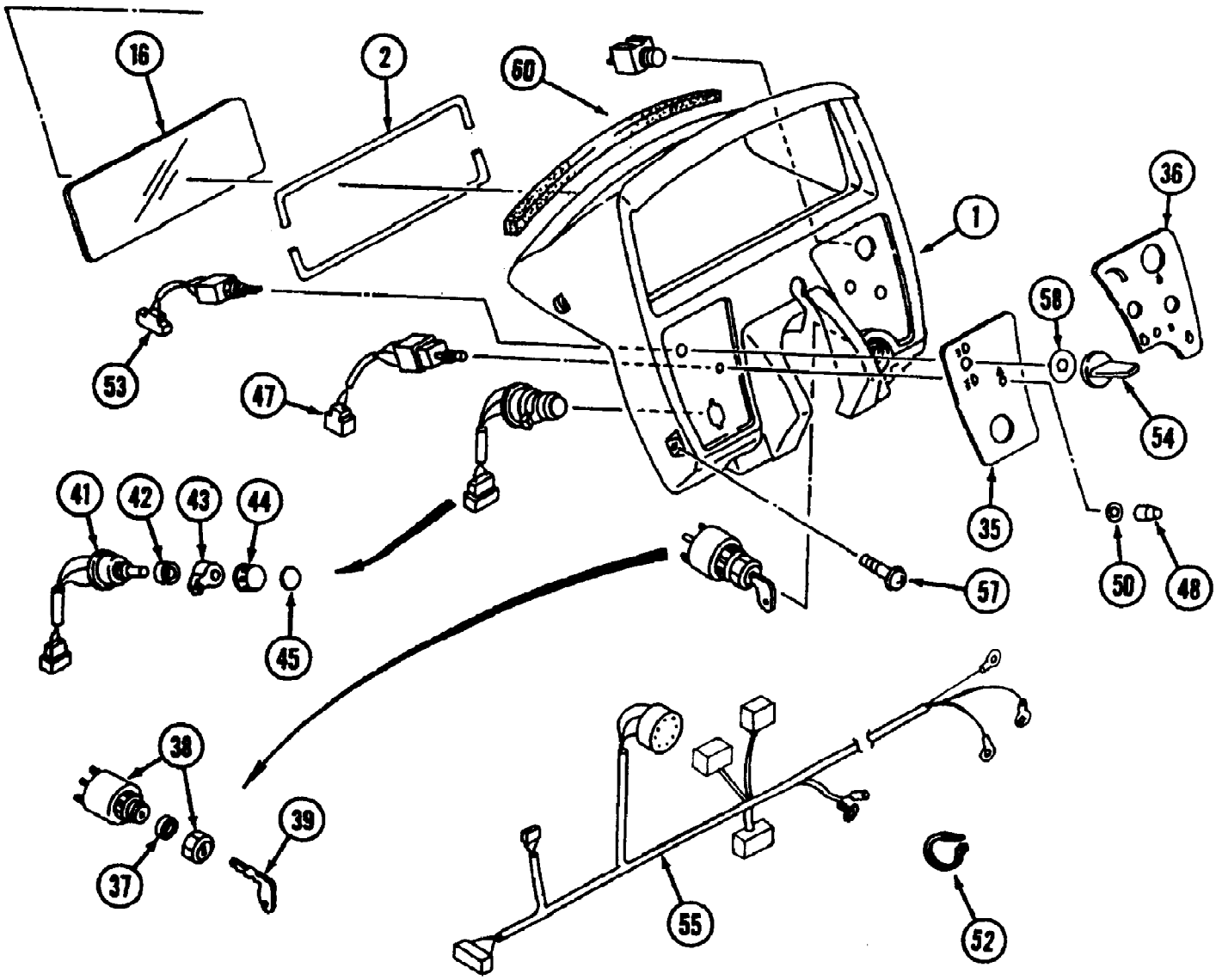

www.mymowerparts.com

For Discount Cub Cadet Parts Call 606-678-9623 or 606-561-4983

Ref #	Part Number	Qty	S/P/F	Description
	MA-19682982000	1		Panel Ass'y. Includes Items 1 - 55
1	MA-10322851100	1		Panel
2	MA-10253501300	1		Packing
3	MA-10253501500	2		Bracket C
4	MA-10253501600	1		Bracket L
5	MA-10253501800	1		Bracket R
7	MA-A2420105016	4		Screw
8	MA-A3000105002	4		Nut
9	MA-A3600100502	4		Washer
10	MA-03500120512	4		Washer
12	MA-35180813900	8		Screw
13	MA-36630836200	2		Clamp
	MA-19682983000	1		Meter Ass'y. Includes Items 16 - 31
16	MA-19632911200	1	S	Glass Ass'y.
17	MA-10253502800	1		Case
18		1		Plate, Monitor (NSS)
19	MA-10253502820	2		Lens, Indicator
20		1		Board, Print (NSS)
21	MA-19682983000	1		Tachometer
23	MA-19632911540	1		Meter, Fuel & Temp.
24	MA-10253502300	4	/P	Bulb Ass'y.
28	MA-10382831900	6		Bulb Ass'y.
30	MA-H2420104010	4		Screw
31	MA-10253502900	2		Screw
35	MA-19632911700	1		Label, Panel L.H.
36	MA-19672934000	1		Label, Panel R.H.
	MA-10312888000	1	S	Starter Ass'y. Includes Items 37 - 39
37	MA-19042849000	1		Packing, Starter
38	MA-10312889000	1	S	Switch, Starter
39	MA-27800501200	1	/P	Key, Starter
	MA-19632916000	1	/P	Switch, Combination Includes Items 41 - 45
41	MA-19632916100	1	S	Switch, Body Ass'y.
42	MA-35310806200	1		Ring, Nut
43	MA-35310806300	1		Flasher, Lever
44	MA-35310806400	1		Lighting, Knob
45	MA-19632916300	1		Label, Lamp
	MA-19632917000	1		Switch, Hazard Includes items 47 - 50
47	MA-19632917200	1		Switch
48	MA-11742944000	1		Switch,Cover
50	MA-03500130615	1		Washer
52	MA-00511022030	1		Band,Wire
53	MA-19632918000	1		Switch,Light H/L
54	MA-10322889000	1		Boots
55	MA-19672935000	1		Harness P
57	MA-F0500406016	4		Bolt
58	MA-19632919000	1		Packing, Rubber
60	MA-37357619700	1		Seal, Dust

www.mymowerparts.com

For Discount Cub Cadet Parts Call 606-678-9623 or 606-561-4983

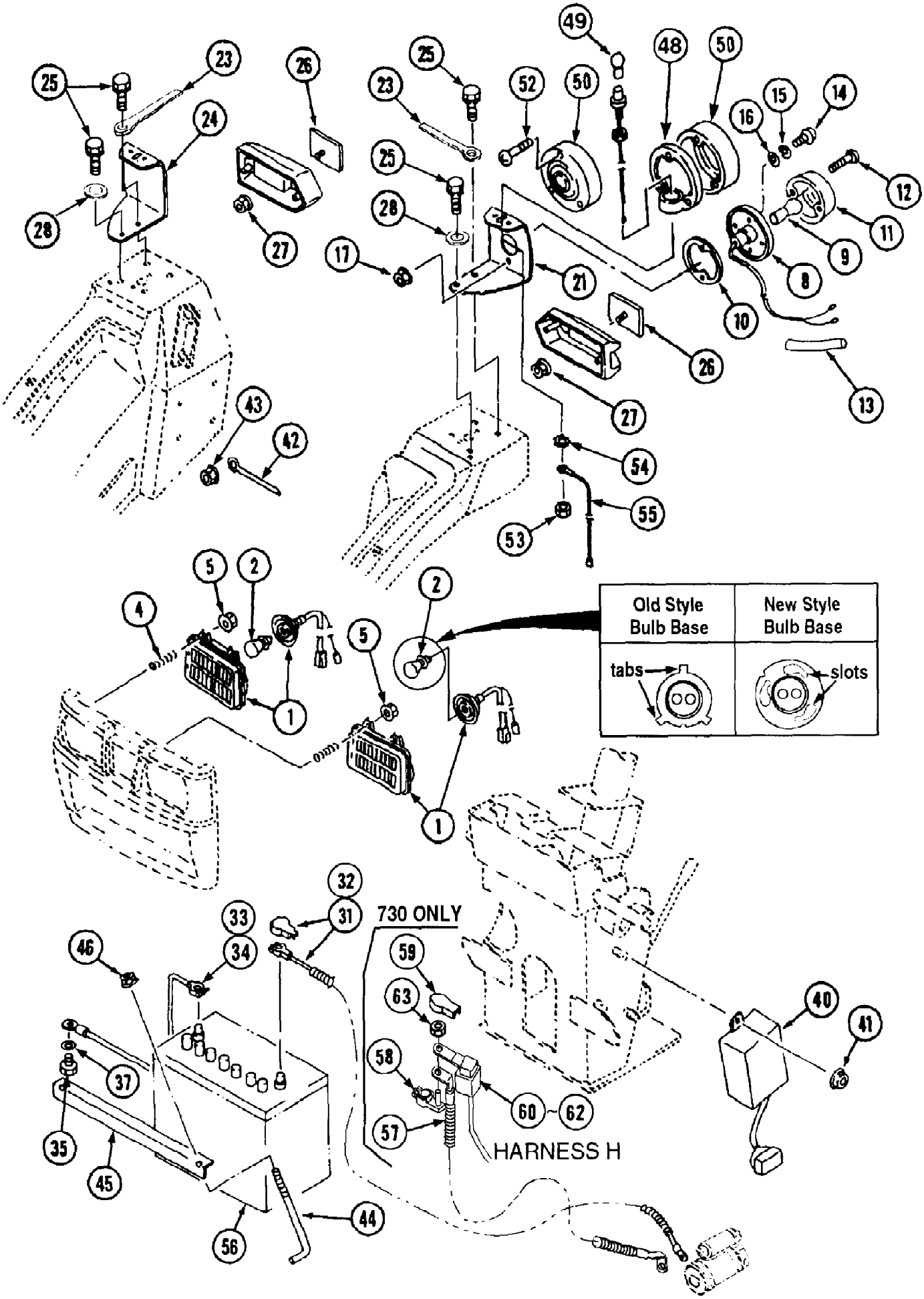

www.mymowerparts.com

For Discount Cub Cadet Parts Call 606-678-9623 or 606-561-4983

Ref #	Part Number	Qty	S/P/F	Description
1	MA-10362811001	2	F	Lamp, Head Includes item 2
2	MA-67404-01720	2	/P/F	Bulb
	MA-09808123509	2	F	Bulb
4	MA-10192849001	6		Spring
5	MA-F3000105001	6		Nut, Flange
	MA-19822828000	1		Lamp,Tail Ass'y. Includes items 8-16
8	MA-19822822110	1		Socket
9	MA-19822822120	1		Bulb
10	MA-19822822130	1		Gasket
11	MA-19822822140	1		Lens
12	MA-A2320103030	2		Screw
13	MA-19831744000	1		Tube
14	MA-A2420105012	2		Screw
15	MA-A3600100502	2		Washer, Spring
16	MA-03500120512	2		Washer
17	MA-F3000105001	2		Nut, Flange
21	MA-19632935AG1	1	/P	Bracket, Lamp L.H.
23	MA-00502110083	4		Clamp
24	MA-19632936AG1	1	/P	Bracket, Lamp R.H.
25	MA-F1540108012	6		Bolt
26	MA-10192279000	2		Reflector
27	MA-F3000106001	2		Nut, Flange
28	MA-03500140818	2		Washer
31		1		Cord Ass'y. Not used on this product
32	MA-19682928000	1		Cord Ass'y. Model 7300 w/Serial No. 21932 and below & Model 7305 w/Serial No. 23069 and below.
33		1		Cord, Battery Not used on this product
34	MA-37320841000	1		Cord, Battery
35	MA-11792963000	2		FT Bolt
37	MA-A3600100802	2		Washer
40	MA-19672944000	1		Unit, Hazard
41	MA-F3000106000	1		Nut
42	MA-00502110083	2		Clamp
43	MA-F3010108001	2		Nut
44	MA-19822884000	2		L-Bolt
45	MA-19822885AG0	1		Clamp, Battery
46	MA-F3000106011	2		Nut
	MA-19672942000	2		Lamp, Signal Includes items 48-55
48		2		Body NSS
49	MA-10356281200	2	S	Bulb
50	MA-19672942200	4		Lens
52	MA-04322104025	12		Screw
53	MA-A3030112003	2		Nut
54	MA-03700112000	2		Washer, Tooth
55	MA-19672943000	2		Lead, Wire
56	725-3174	1	S	Battery, 500CCA
57	MA-19682926000	1	F	Cord, Plus
58	MA-35590895000	1	F	Terminal
59	MA-10382816000	1	F	Cap
60	MA-19682927000	1	F	Fuse Box Includes items 61-62
61	MA-19682927200	1	F	Fuse

www.mymowerparts.com

For Discount Cub Cadet Parts Call 606-678-9623 or 606-561-4983

Ref #	Part Number	Qty	S/P/F	Description
62	MA-19682927300	2	F	Bolt
63	MA-F3010108000	1	F	Nut
	MA-10192840001	1		Head Lamp Ass'y
	MA-10192841000	1		Semi Sealed Beam
	MA-10192842002	1		Socket

www.mymowerparts.com

For Discount Cub Cadet Parts Call 606-678-9623 or 606-561-4983

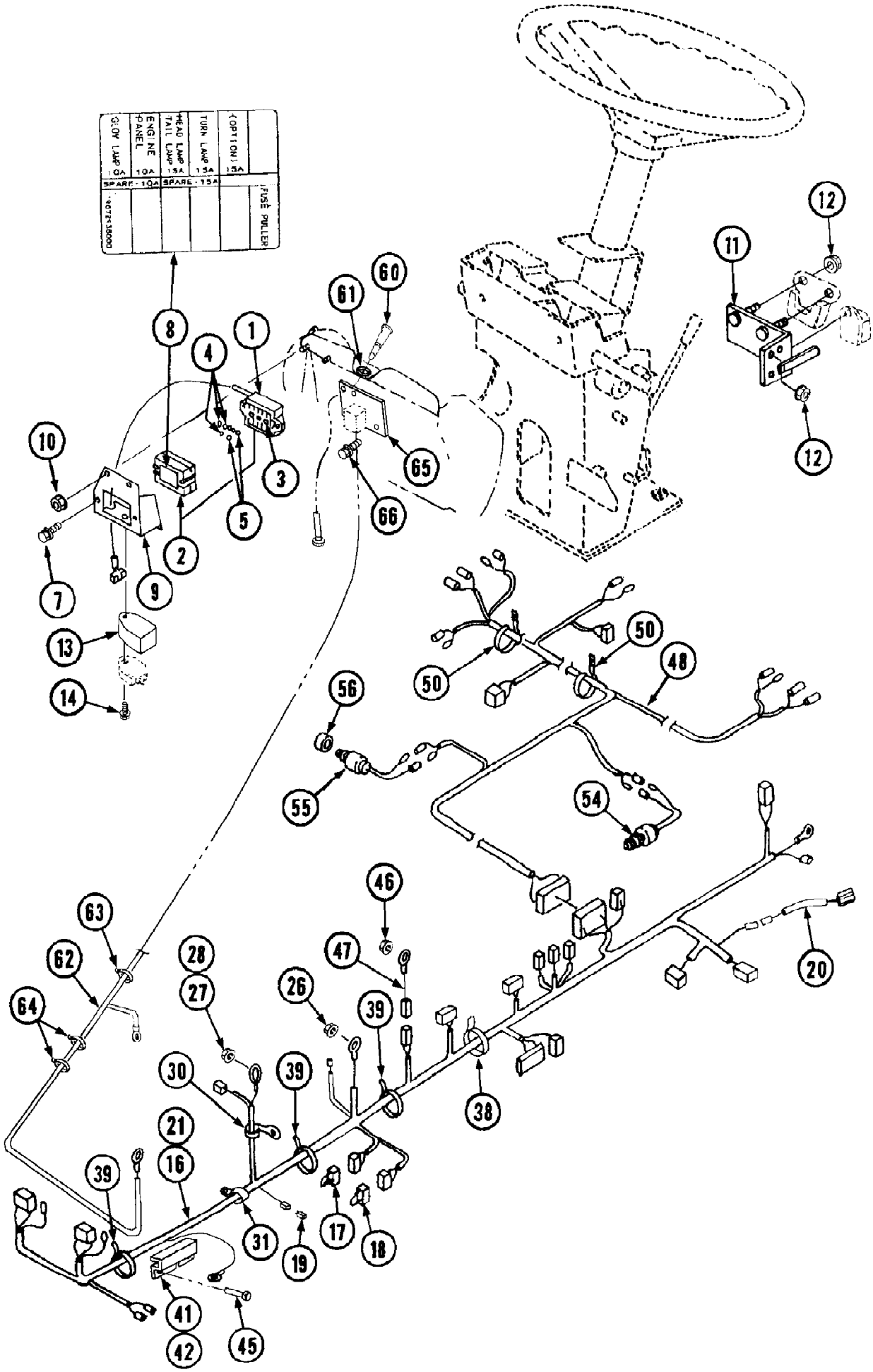

www.mymowerparts.com

For Discount Cub Cadet Parts Call 606-678-9623 or 606-561-4983

Ref #	Part Number	Qty	S/P/F	Description
	MA-19672937001	1		Fuse Box Includes items 1-5
1	MA-19672937101	1		Body Ass'y.
2	MA-35320901200	1		Cover
3	MA-35320901300	1		Fuse Puller
4	MA-09801001005	3		Fuse
5	MA-09801001505	4		Fuse
7	MA-H1440106016	2	/P	Bolt
8	MA-19672938000	1		Mark, Fuse
9	MA-19682938BC0	1		Bracket
10	MA-F3000106000	3		Nut
11	MA-19672941AG0	1		Bracket
12	MA-F3000106000	3		Nut
13	MA-10253534000	1		Cover
14	MA-H1440106016	1	/P	Bolt
		1		Harness E Not used on this product; Includes items 16-19; 7260 S/N 21980 & Lower, 7265 S/N 22410 & Lower
		1		Harness E Not used on this product; Includes items 16-19; 7260 S/N 21981 & Higher, 7265 S/N 22411 & Higher; Replaces Harness MA-19682985001 by also ordering Wire Lead MA-19672949000.
16		1		Harness Not used on this product
17		1		Fuse 60A Not used on this product
18		1		Fuse 50A Not used on this product
19		1		Diode Not used on this product
20		1		Wire Lead Not used on this product; Used with MA-19682985002 Harness.
	MA-19682986001	1	S/F	Harness E Includes items 21, 17-19
	MA-19682986002	1	/P/F	Harness E Includes items 21, 17-19
21		1		Harness
26	MA-F3010108000	1		Nut
27	MA-F3000105000	1		Nut
28		1		Nut Not used on this product
30	MA-00502108063	1		Clamp
31	MA-00502114083	1		Clamp
38	MA-00511032070	1		Band Wire
39	MA-00511070070	3		Band Wire
41		1		Cover Not used on this product
42	MA-19682987AG0	1		Cover
45	MA-H1540108020	1		Bolt
46	MA-F3010108000	1		Nut
47	MA-19632945000	1		Harness M
48	MA-19682988000	1		Harness B
50	MA-00511032070	2		Band Wire
54	MA-10253505001	1	/P	Switch, Safety
55	MA-10253505401	1	S	Switch
56	MA-19672921000	1		Collar
60	MA-10253514000	1		Cable, Flexible
61	MA-00401002501	1		Grommet
62	MA-19682989000	1	F	Harness H
63	MA-00511032070	1	F	Band Wire

www.mymowerparts.com

For Discount Cub Cadet Parts Call 606-678-9623 or 606-561-4983

Ref #	Part Number	Qty	S/P/F	Description
64	MA-00511070070	2	F	Band Wire
65	MA-19682991000	1	F	Bracket
66	MA-H1440106016	4	/P/F	Bolt

www.mymowerparts.com

For Discount Cub Cadet Parts Call 606-678-9623 or 606-561-4983

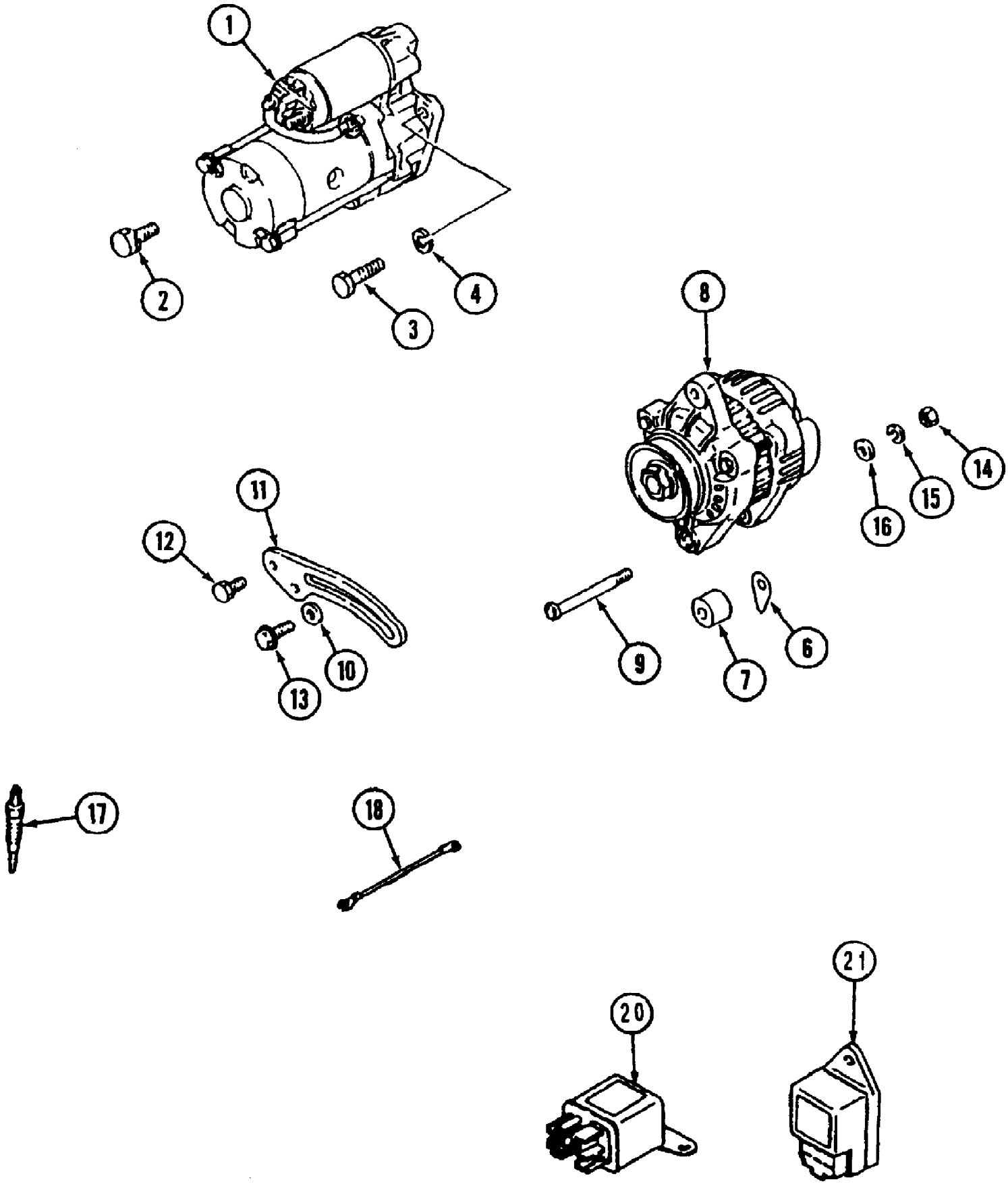

www.mymowerparts.com

For Discount Cub Cadet Parts Call 606-678-9623 or 606-561-4983

Electrical Equipment 30HP Eng 7300 SN 21932-Lower/7305 SN 23069-Lower

Ref #	Part Number	Qty	S/P/F	Description
1	MA-MM409412	1		Starter Ass'y.
2	MA-MF241282	1		Bolt, W/Washer
3	MA-MM409427	1		Bolt, Starter
4	MA-MF450406	1	S	Washer, Lock
6	MA-MD001517	1		Shim
7	MA-MM407656	1		Spacer
8	MA-MM435752	1		Alternator Ass'y.
9	MA-MD001515	1		Bolt, Special
10	MA-MD001521	1		Washer, Plain
11	MA-MM413829	1		Blace, Generator
12	MA-MF241251	1		Bolt, W/Washer
13	MA-MF140026	1		Bolt, Flange
14	MA-MF430005	1		Nut
15	MA-MF450405	1		Washer, Spring
16	MA-MS450035	1		Washer, Plain
17	MA-MM431439	3	S	Plug, Glow
18	MA-MM432739	2		Wire, Glow Plug Lead
20	MA-MM43128201	1		Relay, Glow
21	MA-MM436811	1		Timer, Glow

www.mymowerparts.com

For Discount Cub Cadet Parts Call 606-678-9623 or 606-561-4983

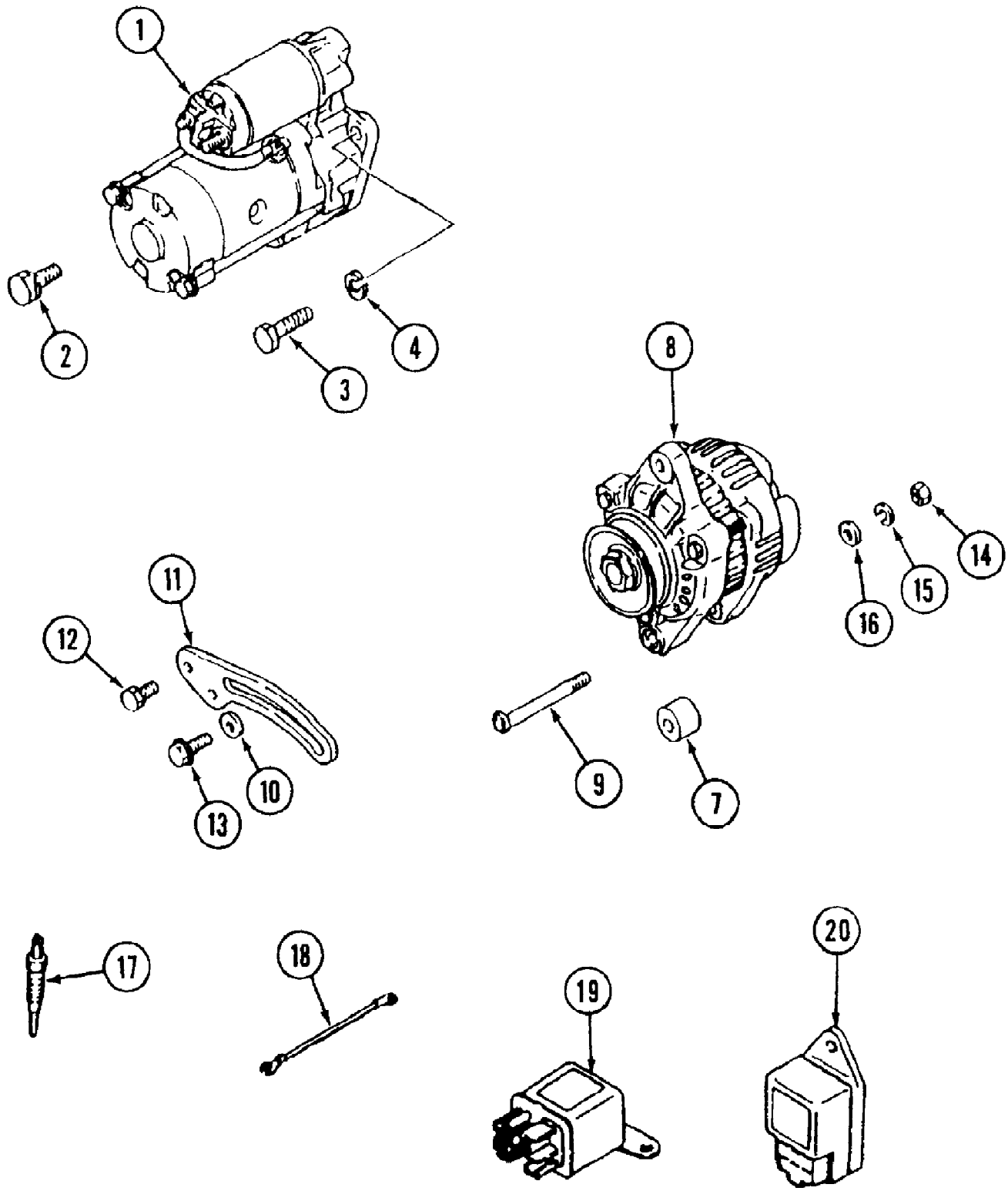

www.mymowerparts.com

For Discount Cub Cadet Parts Call 606-678-9623 or 606-561-4983

Electrical Equipment 30HP Engine 7300 S/N 21933 & Up

Ref #	Part Number	Qty	S/P/F	Description
1	MA-MM409412	1		Starter Ass'y.
2	MA-MF241282	1		Bolt, w/Washer
3	MA-MM409427	1		Bolt, Starter
4	MA-MF450406	1	S	Washer, Lock
7	MA-MM407656	1		Spacer
8	MA-30A68-00801	1	/P	Alternator Ass'y.
9	MA-MD001515	1		Bolt, Special
10	MA-MD001521	1		Washer, Plain
11	MA-MM413829	1		Brace, Generator
12	MA-MF241251	1		Bolt, w/Washer
13	MA-MF140026	1		Bolt, Flange
14	MA-MF430005	1		Nut
15	MA-MF450405	1		Washer, Spring
16	MA-MS450035	1		Washer, Plain
17	MA-MM431439	3	S	Plug, Glow
18	MA-MM432739	2		Wire, Glow Plug Lead
19	MA-MM43128201	1		Relay, Glow
20	MA-MM436811	1		Timer, Glow

www.mymowerparts.com

For Discount Cub Cadet Parts Call 606-678-9623 or 606-561-4983

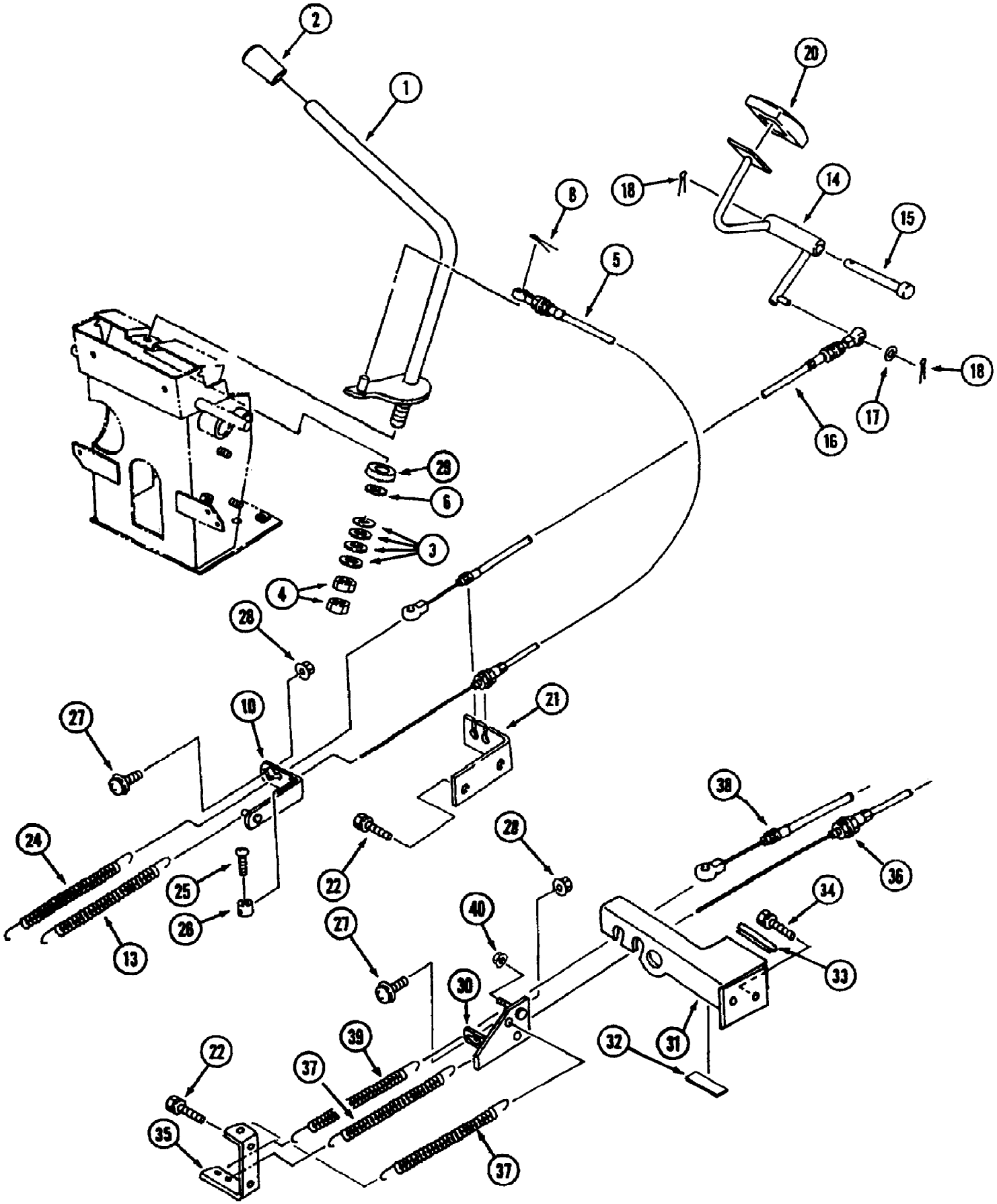

www.mymowerparts.com

For Discount Cub Cadet Parts Call 606-678-9623 or 606-561-4983

Ref #	Part Number	Qty	S/P/F	Description
1	MA-19680211AG0	1		Lever, Accel.
2	MA-06910012258	1		Grip
3	MA-36105725100	4		Spring
4	MA-A3030112002	2		Nut
5	MA-10320216000	1		Wire, Accelerator
6	MA-31212559000	1	S	Liner
8	MA-05200125016	1	S	Pin,Split
10	MA-19630217000	1		Joint
13	MA-35013176000	1		Spring
14	MA-19630221000	1		Pedal, Accel.
15	MA-27904116000	1		Pin
16	MA-19941832000	1		Wire, Accelerator
17	MA-03500130613	1		Washer
18	MA-05200125016	2	S	Pin,Split
20	MA-10320228000	1		Cover, Pedal
21	MA-10320224000	1	S	Plate
22	MA-F1440106016	2		Bolt
24	MA-27942740401	1		Spring
25	MA-F1600-05005	1		Screw
26	MA-67452-00816	1		Nut
27	MA-H2420106012	1		Screw
28	MA-F3000106000	1		Nut
29	MA-19680212000	1		Lining, Brake
30		1		Plate Not used on this product
31		1		Bracket Not used on this product
32		1		Rubber Not used on this product
33		1		Rubber Not used on this product
34		1		Bolt Not used on this product
35		1		Plate Not used on this product
36		1		Wire, Accelerator Not used on this product
37		1		Spring Not used on this product
38		1		Wire, Accelerator Not used on this product
39		1		Spring Not used on this product
40		1		Nut Not used on this product

www.mymowerparts.com

For Discount Cub Cadet Parts Call 606-678-9623 or 606-561-4983

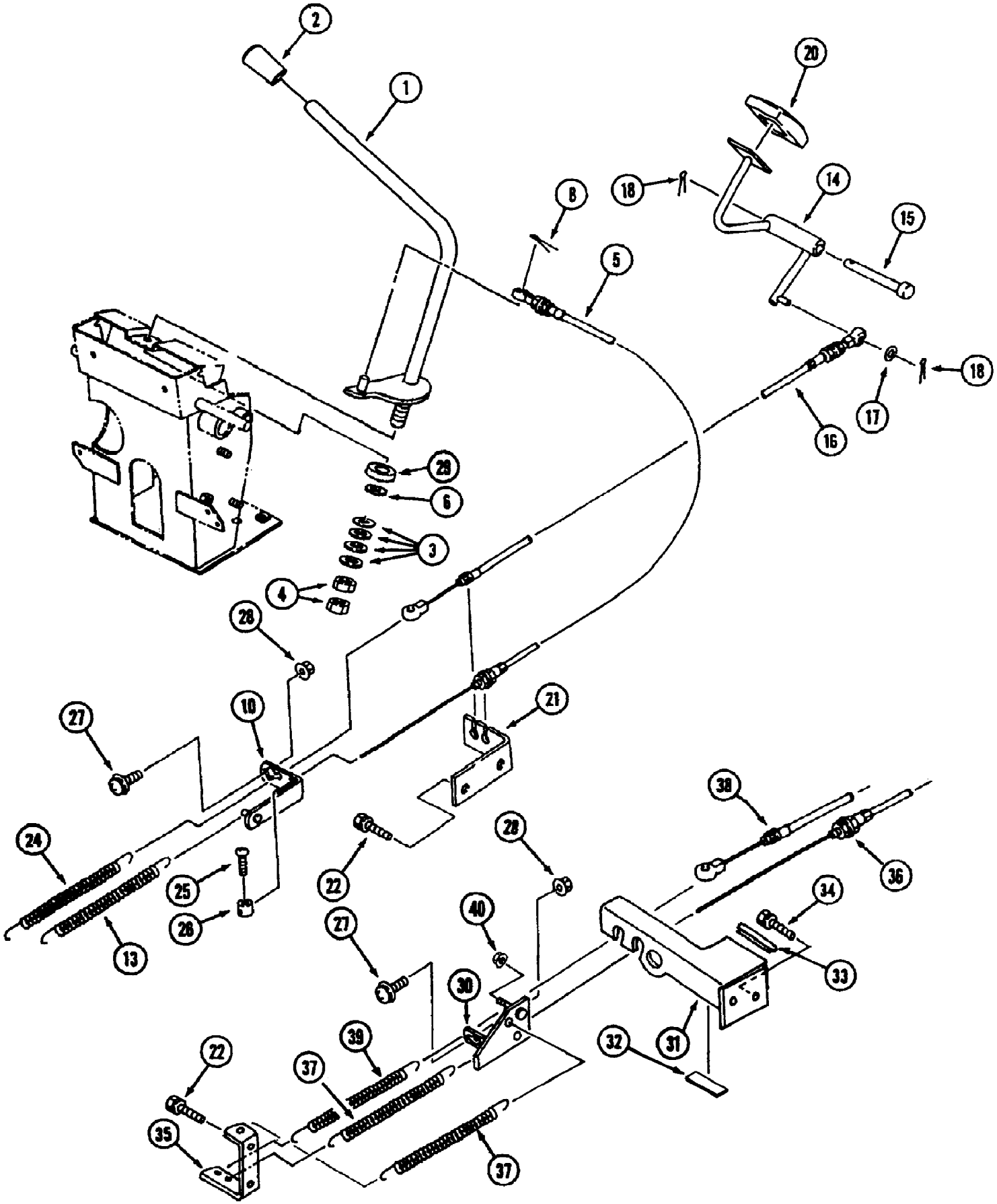

www.mymowerparts.com

For Discount Cub Cadet Parts Call 606-678-9623 or 606-561-4983

Ref #	Part Number	Qty	S/P/F	Description
1	MA-19680211AG0	1		Lever, Accel.
2	MA-06910012258	1		Grip
3	MA-36105725100	4		Spring
4	MA-A3030112002	2		Nut
5	MA-10320216000	1		Wire, Accelerator
6	MA-31212559000	1	S	Liner
8	MA-05200125016	1	S	Pin, Split
10	MA-19630217000	1		Joint
13	MA-35013176000	1		Spring
14		1		Pedal, Accel. Not used on this product
15		1		Pin Not used on this product
16		1		Wire, Accelerator Not used on this product
17		1		Washer Not used on this product
18		1		Pin,Split Not used on this product
20		1		Cover, Pedal Not used on this product
21	MA-10320224000	2	S	Plate
22	MA-F1440106016	2		Bolt
24		1		Spring Not used on this product
25	MA-F1600-05005	1		Screw
26	MA-67452-00816	1		Nut
27	MA-H2420106012	1		Screw
28	MA-F3000106000	1		Nut
29	MA-19680212000	1		Lining, Brake
30		1		Plate Not used on this product
31		1		Bracket Not used on this product
32		1		Rubber Not used on this product
33		1		Rubber Not used on this product
34		1		Bolt Not used on this product
35		1		Plate Not used on this product
36		1		Wire, Accelerator Not used on this product
37		1		Spring Not used on this product
38		1		Wire, Accelerator Not used on this product
39		1		Spring Not used on this product
40		1		Nut Not used on this product

www.mymowerparts.com

For Discount Cub Cadet Parts Call 606-678-9623 or 606-561-4983

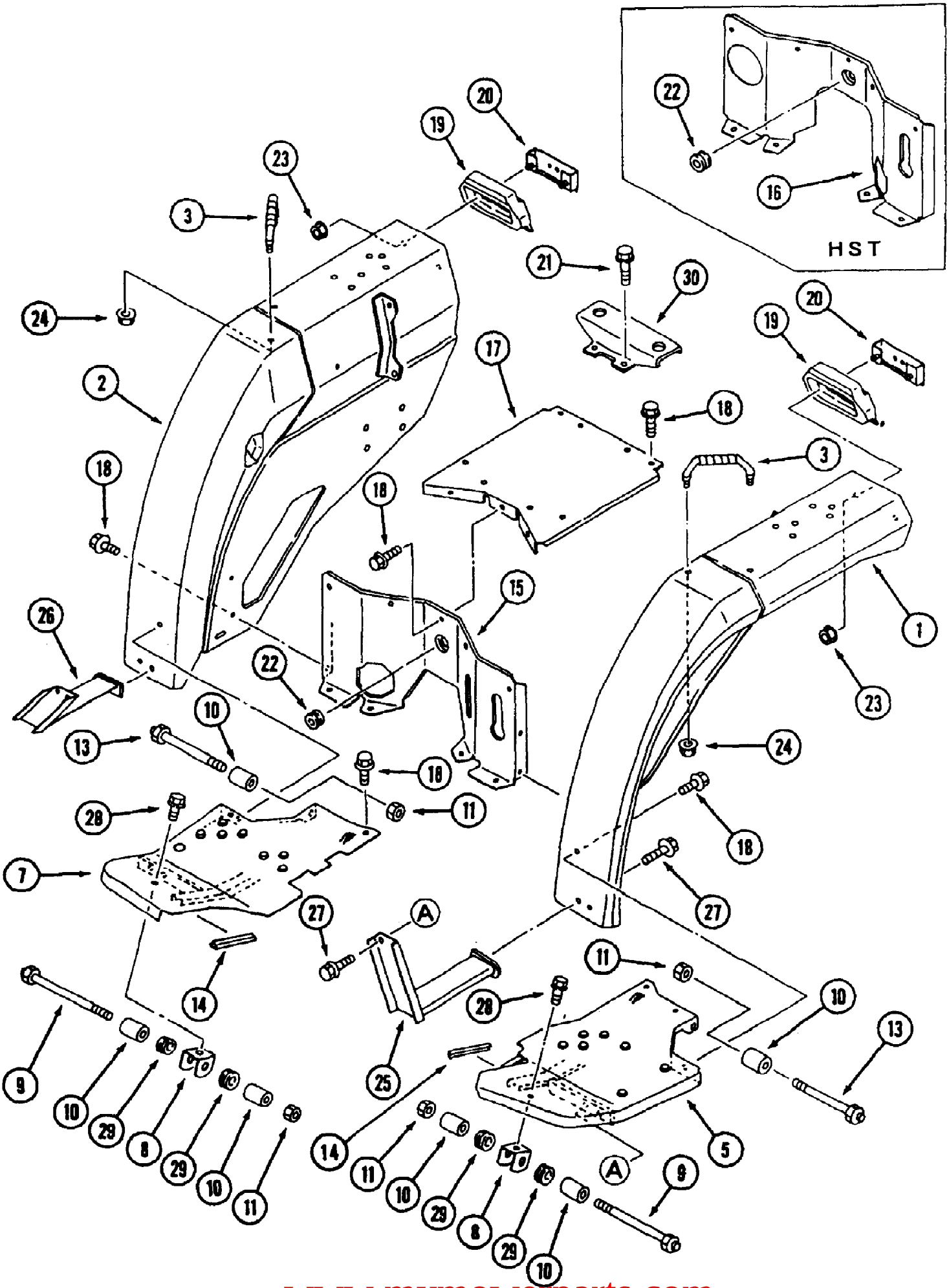

www.mymowerparts.com

For Discount Cub Cadet Parts Call 606-678-9623 or 606-561-4983

Ref #	Part Number	Qty	S/P/F	Description
1	MA-19643501BD0	1	/P	Fender L.H.
2	MA-19643503BD0	1	/P	Fender R.H.
3	MA-19633511000	2		Rail, Hand
5	MA-19643511BD0	1	/P	Step L.H.
7	MA-19643513BD0	1		Step R.H.
8	MA-19633525000	2		Bracket
9	MA-19643515000	2		Bolt
10	MA-19633531000	6		Rubber
11	MA-A3030116002	4		Nut
13	MA-19633528000	2		Bolt
14	MA-35259242800	2		Seal A
15	MA-19643521BD0	1		Cover, Front
16		1		Cover, Front Not used on this product
17	MA-19643525BD0	1		Cover, Upper
18	MA-H1540108016	17		Bolt
19	MA-10302805000	2		Case, Lamp
20	MA-19643531BD0	2	S	Bracket
21	MA-F1550112030	4	/P	Bolt
22	MA-00401002500	1		Grommet
23	MA-F3000106011	4		Nut
24	MA-F3010108001	4		Nut
25	MA-19643535BD0	1	/P	Step, Sub L.H.
26	MA-19643536BD0	1	/P	Step, Sub R.H.
27	MA-H1540108020	8		Bolt
28	MA-F1540108012	2		Bolt
29	MA-43750822000	4		Grommet
30	MA-19643543AG0	1		Bracket

www.mymowerparts.com

For Discount Cub Cadet Parts Call 606-678-9623 or 606-561-4983

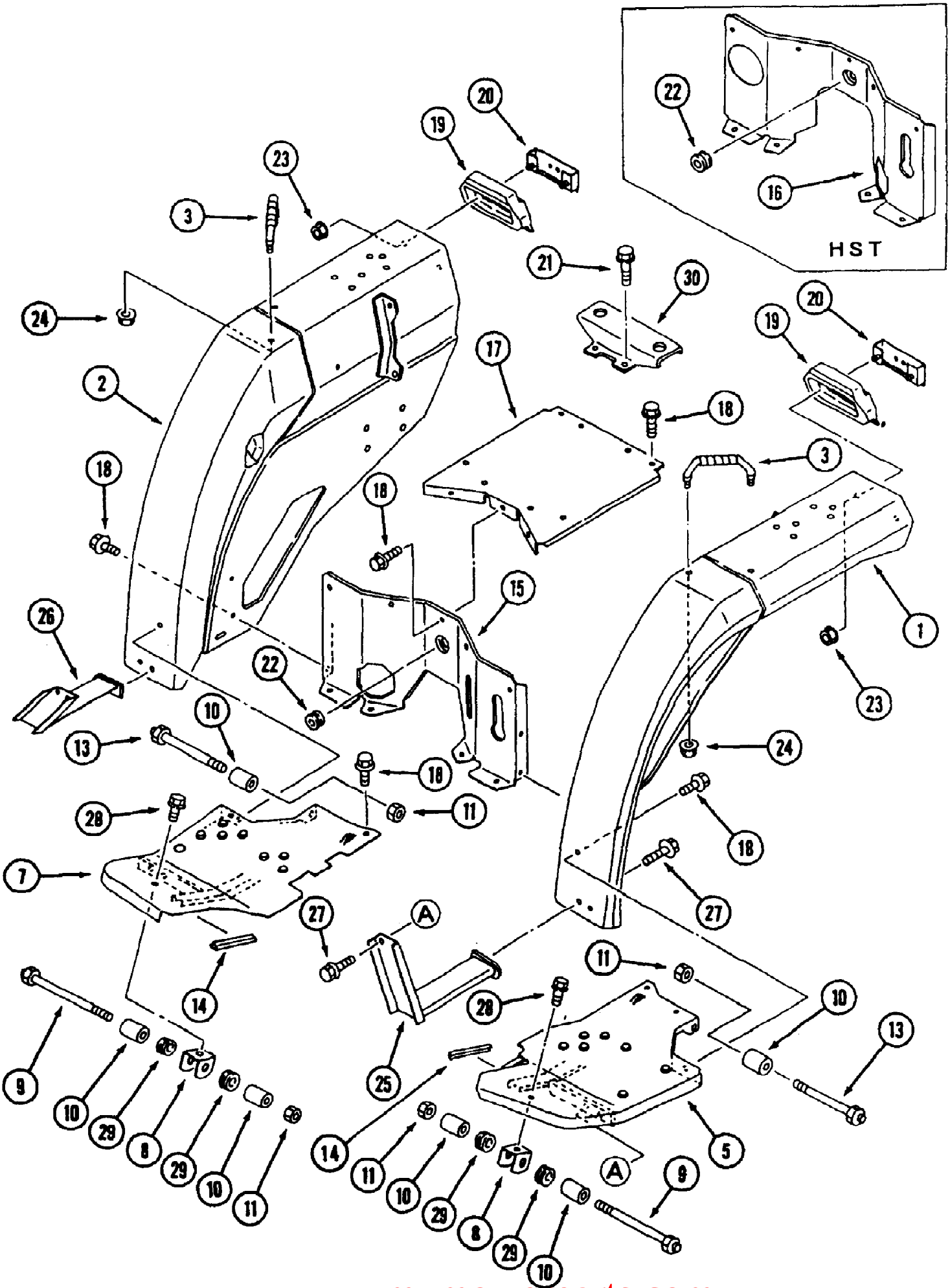

www.mymowerparts.com

For Discount Cub Cadet Parts Call 606-678-9623 or 606-561-4983

Ref #	Part Number	Qty	S/P/F	Description
1	MA-19643501BD0	1	/P	Fender L.H.
2	MA-19643503BD0	1	/P	Fender R.H.
3	MA-19633511000	2		Rail, Hand
5	MA-19643511BD0	1	/P	Step L.H.
7	MA-19643513BD0	1		Step R.H.
8	MA-19633525000	2		Bracket
9	MA-19643515000	2		Bolt
10	MA-19633531000	6		Rubber
11	MA-A3030116002	4		Nut
13	MA-19633528000	2		Bolt
14	MA-35259242800	2		Seal A
15		1		Cover, Front Not used on this product
16	MA-19643523BD0	1		Cover, Front
17	MA-19643525BD0	1		Cover, Upper
18	MA-H1540108016	17		Bolt
19	MA-10302805000	2		Case,Lamp
20	MA-19643531BD0	2	S	Bracket
21	MA-F1550112030	4	/P	Bolt
22	MA-00401002500	1		Grommet
23	MA-F3000106011	4		Nut
24	MA-F3010108001	4		Nut
25	MA-19643535BD0	1	/P	Step, Sub L.H.
26	MA-19643536BD0	1	/P	Step, Sub R.H.
27	MA-H1540108020	8		Bolt
28	MA-F1540108012	2		Bolt
29	MA-43750822000	4		Grommet
30	MA-19643543AG0	1		Bracket

www.mymowerparts.com

For Discount Cub Cadet Parts Call 606-678-9623 or 606-561-4983

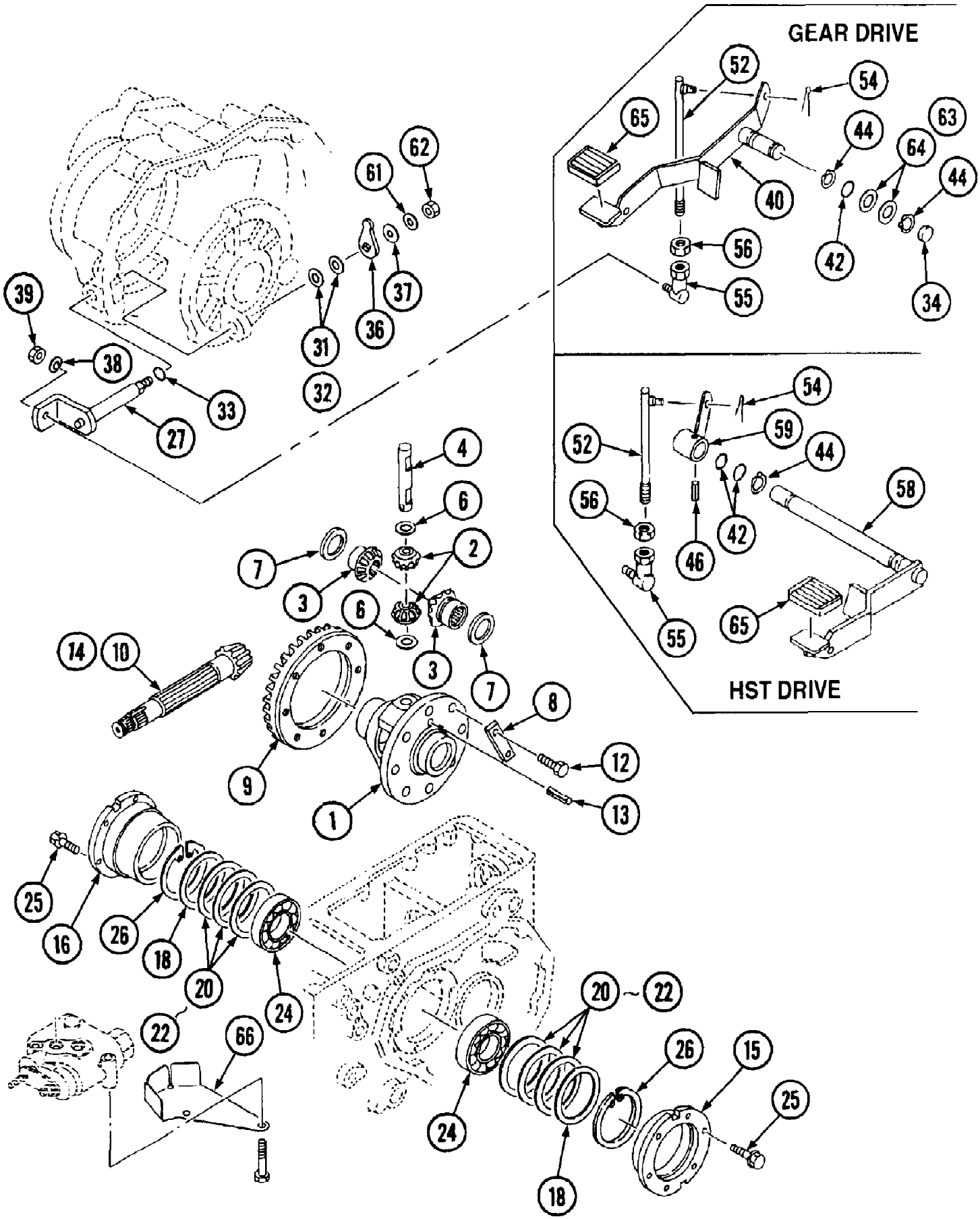

www.mymowerparts.com

For Discount Cub Cadet Parts Call 606-678-9623 or 606-561-4983

Ref #	Part Number	Qty	S/P/F	Description
	MA-19641415000	1		Diff.Case Ass'y. Includes Items 1 - 9 & 12 - 14
		1		Gear Case Ass'y.
1	MA-19061411000	1		Case Diff.
2	MA-10211412001	2		Pinion Diff.
3	MA-10211413001	2		Gear, Side
4	MA-10211414000	1		Shaft, Pinion
6	MA-10211415001	2		Washer, Thrust
7	MA-10211416001	2		Washer, Thrust
8	MA-10211417000	4		Washer, Lock
9	MA-19641416000	1		7-35 Gear Set, Includes Item 14
10		1		Shaft, Pinion Not used on this application
12	MA-A0400110020	8		Bolt
13	MA-05500006040	1		Pin,Spring
14	MA-19641416000	1		7-35 Gear Set, Includes Item 9
15	MA-19641431000	1		Holder L.H.
16	MA-19641432000	1		Holder R.H.
18	MA-19641434000	2		Liner
	MA-19641445000	1		Liner Set Includes Items 20 - 22
20	MA-19641435000	AR		Liner
21	MA-19641436000	AR		Liner
22	MA-19641437000	AR		Liner
24	MA-10211438000	2		Bearing
25	MA-F1540108025	12		Bolt
26	MA-07410009501	2		Ring
27	MA-19641439AG0	1		Shifter
	MA-10191806000	1		Shim Set Includes Items 31 & 32
31	MA-07310001504	AR		Liner t=0.4
32	MA-07310001512	AR		Liner t=1.2
33	MA-08300100120	1	S	O-Ring
34	MA-08340020070	1		Seal Cap
36	MA-19641438000	1		Arm
37	MA-03500151026	1		Washer
38	MA-A3600100802	1		Washer
39	MA-A3010108002	1		Nut
40	MA-19641441AG0	1		Pedal Diff. Lock
42	MA-08300100160	1	/P	O-Ring
44	MA-07400002000	2		Ring
46		1		Pin, Spring Not used on this application
52	MA-19641442000	1		Rod
54	MA-05200130020	1		Pin, Split
55	MA-37041577000	1		Joint Ball
56	MA-A3030110002	1		Nut
58		1		Pedal Diff. Lock Not used on this application
59		1		Arm, Diff. Not used on this application
61	MA-A3600101002	1	/P	Washer
62	MA-A3030110002	1		Nut
	MA-19631417000	1		Liner Set Includes Items 63 & 64
63	MA-07310002004	AR		Liner t=0.4
64	MA-07310002010	AR		Liner t=1.0
65	MA-10320228000	1		Cover Pedal
66	MA-19641446000	1		Plate, Guide

www.mymowerparts.com

For Discount Cub Cadet Parts Call 606-678-9623 or 606-561-4983

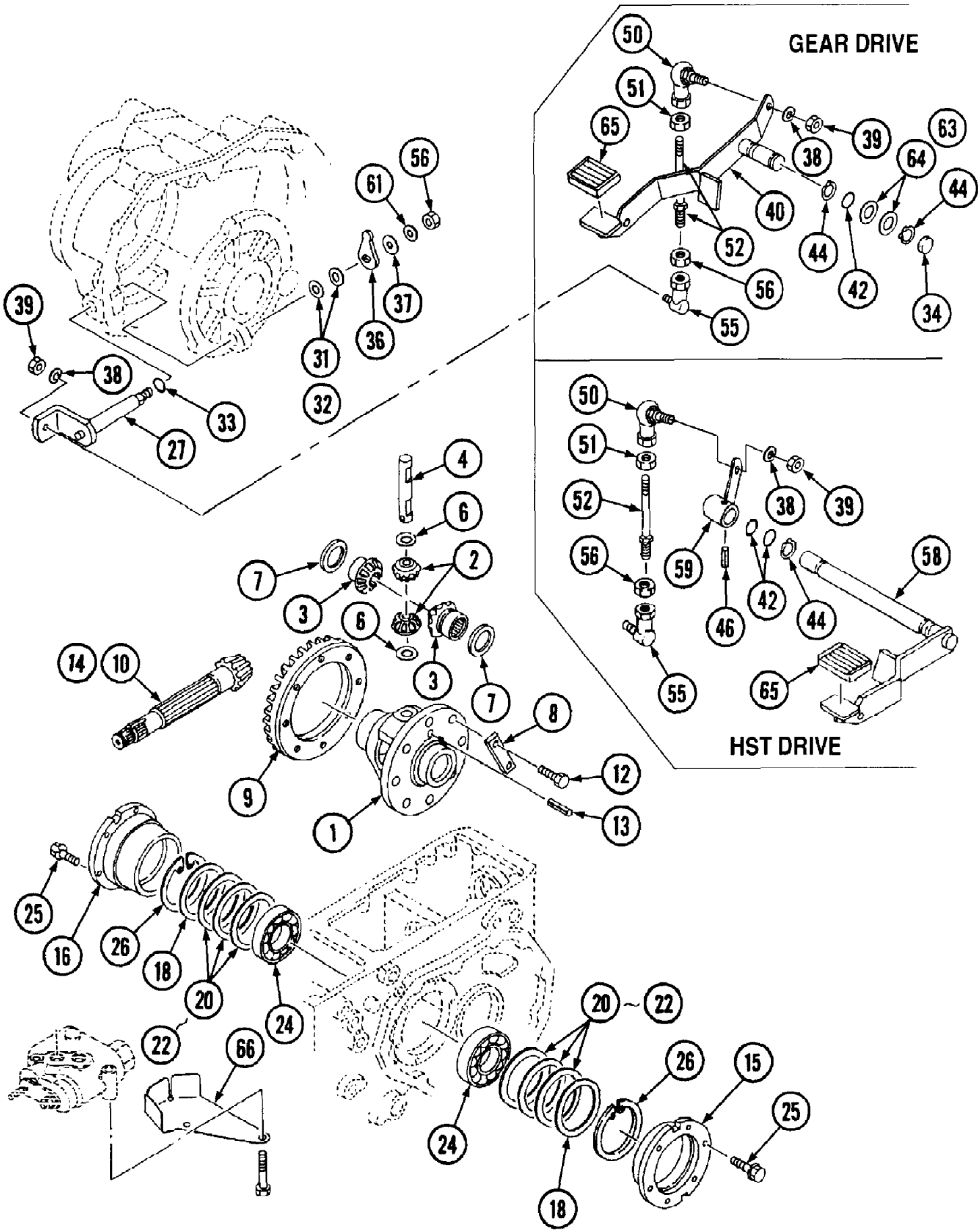

www.mymowerparts.com

For Discount Cub Cadet Parts Call 606-678-9623 or 606-561-4983

Ref #	Part Number	Qty	S/P/F	Description
	MA-19641415000	1		Diff. Case Ass'y. Includes items 1-9, 12-14
		1		Gear Case Ass'y.
1	MA-19061411000	1		Case, Differential
2	MA-10211412001	2		Pinion, Diff.
3	MA-10211413001	2		Gear, Side
4	MA-10211414000	1		Shaft, Pinion
6	MA-10211415001	2		Washer, Thrust
7	MA-10211416001	2		Washer, Thrust
8	MA-10211417000	4	F	Washer, Lock
9	MA-19641416000	1		7-35 Ring Gear/Pinion Set Includes Item 14
9	MA-19641416001	1		7-35 Ring Gear/Pinion Set Includes Item 14
10		1		UNKNOWN
12	MA-A0400110020	8	F	Bolt, M10-1.50
	MA-10131404000	8	F	Bolt, M10-1.25
13	MA-05500006040	1		Pin, Spring
14	MA-19641416000	1		7-35 Ring Gear/Pinion Set Includes Item 9
14	MA-19641416001	1		7-35 Ring Gear/Pinion Set Includes Item 9
15	MA-19641431000	1		Holder, L.H.
16	MA-19641432000	1		Holder, R.H.
18	MA-19641434000	2		Liner
	MA-19641445000	1		Liner, Set Includes items 20-22
20	MA-19641435000	AR		Liner
21	MA-19641436000	AR		Liner
22	MA-19641437000	AR		Liner
24	MA-10211438000	2		Bearing
25	MA-F1540108025	12		Bolt
26	MA-07410009501	2		Ring
27	MA-19641439AG0	1		Shifter
	MA-10191806000	1		Shim Set Includes items 31,32
31	MA-07310001504	AR		Liner t=0.4
32	MA-07310001512	AR		Liner t=1.2
33	MA-08300100120	1	S	O-Ring
34	MA-08340020070	1		Seal Cap
36	MA-19641438000	1		Arm
37	MA-03500151026	1		Washer
38	MA-A3600100802	2		Washer
39	MA-A3010108002	2		Nut
40	MA-19641441AG1	1		Pedal, Diff. Lock
42	MA-08300100160	1	/P	O-Ring
44	MA-07400002000	2		Ring
46		1		Pin, Spring Not used on this application
50	MA-10251135000	1		Ball Joint, Left Hand Thread
51	MA-A3032110002	1		Nut, Left Hand Thread
52	MA-10311814000	1		Rod
55	MA-37041577000	1		Joint, Ball
56	MA-A3030110002	2		Nut
58		1		Pedal, Diff. Lock Not used on this application
59		1		Arm, Diff. Not used on this application
61	MA-A3600101002	1	/P	Washer
	MA-19631417000	1		Liner Set Includes items 63,64
63	MA-07310002004	AR		Liner t=0.4
64	MA-07310002010	AR		Liner t=1.0
65	MA-10320228000	1		Cover, Pedal

www.mymowerparts.com

For Discount Cub Cadet Parts Call 606-678-9623 or 606-561-4983

Ref #	Part Number	Qty	S/P/F	Description
66	MA-19641446000	1		Plate, Guide

www.mymowerparts.com

For Discount Cub Cadet Parts Call 606-678-9623 or 606-561-4983

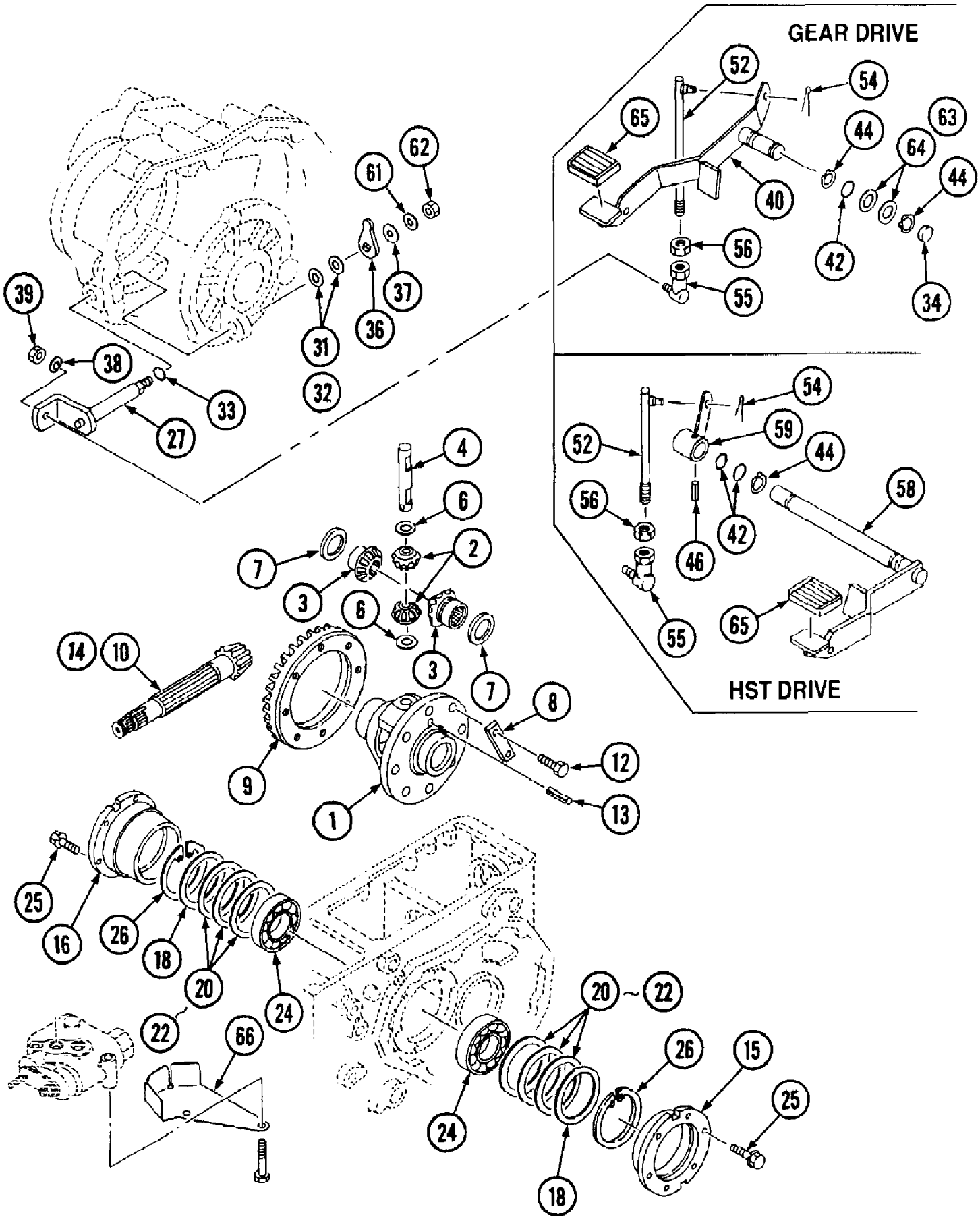

www.mymowerparts.com

For Discount Cub Cadet Parts Call 606-678-9623 or 606-561-4983

Ref #	Part Number	Qty	S/P/F	Description
	MA-19641401000	1		Gear Case Ass'y. Includes Items 1 - 13
1	MA-19061411000	1		Case Diff.
2	MA-10211412001	2		Pinion Diff.
3	MA-10211413001	2		Gear, Side
4	MA-10211414000	1		Shaft, Pinion
6	MA-10211415001	2		Washer, Thrust
7	MA-10211416001	2		Washer, Thrust
8	MA-10211417000	4		Washer, Lock
9	MA-19641412000	1		7-35 Gear Set, Includes Item 10
10	MA-19641412000	1		7-35 Gear Set, Includes Item 9
12	MA-A0400110020	8		Bolt
13	MA-05500006040	1		Pin,Spring
14		1		Shaft, Pinion Not used on this application
15	MA-19641431000	1		Holder L.H.
16	MA-19641432000	1		Holder R.H.
18	MA-19641434000	2		Liner
	MA-19641445000	1		Liner Set Includes Items 20 - 22
20	MA-19641435000	AR		Liner
21	MA-19641436000	AR		Liner
22	MA-19641437000	AR		Liner
24	MA-10211438000	2		Bearing
25	MA-F1540108025	12		Bolt
26	MA-07410009501	2		Ring
27	MA-19641439AG0	1		Shifter
	MA-10191806000	1		Shim Set Includes Items 31 & 32
31	MA-07310001504	AR		Liner t=0.4
32	MA-07310001512	AR		Liner t=1.2
33	MA-08300100120	1	S	O-Ring
34	MA-08340020070	1		Seal Cap
36	MA-19641438000	1		Arm
37	MA-03500151026	1		Washer
38	MA-A3600100802	1		Washer
39	MA-A3010108002	1		Nut
40	MA-19641441AG0	1		Pedal Diff. Lock
42	MA-08300100160	1	/P	O-Ring
44	MA-07400002000	2		Ring
46		1		Pin, Spring Not used on this application
52	MA-19641442000	1		Rod
54	MA-05200130020	1		Pin, Split
55	MA-37041577000	1		Joint Ball
56	MA-A3030110002	1		Nut
58		1		Pedal Diff. Lock Not used on this application
59		1		Arm, Diff. Not used on this application
61	MA-A3600101002	1	/P	Washer
62	MA-A3030110002	1		Nut
	MA-19631417000	1		Liner Set Includes Items 63 & 64
63	MA-07310002004	AR		Liner t=0.4
64	MA-07310002010	AR		Liner t=1.0
65	MA-10320228000	1		Cover Pedal
66	MA-19641446000	1		Plate, Guide

www.mymowerparts.com

For Discount Cub Cadet Parts Call 606-678-9623 or 606-561-4983

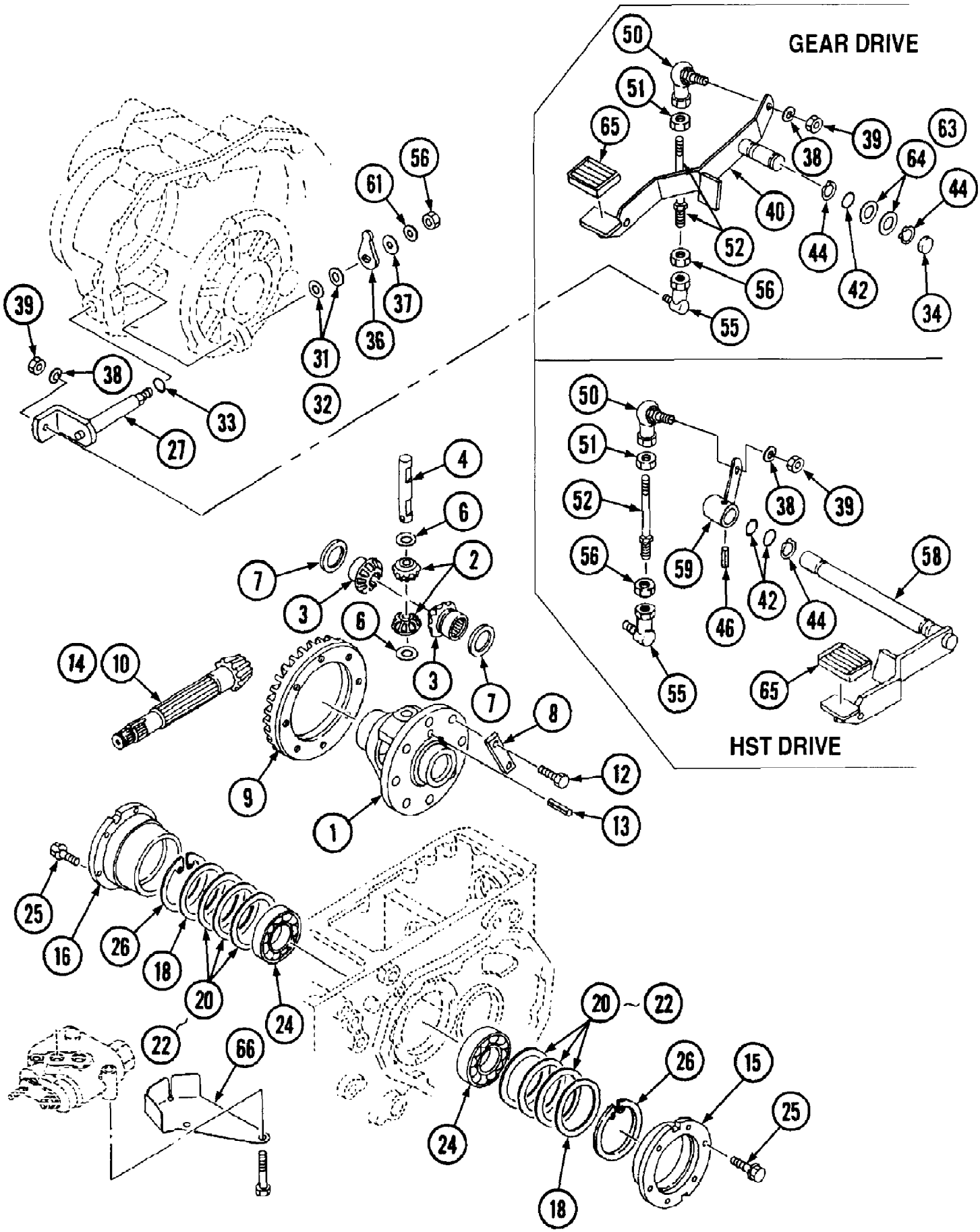

www.mymowerparts.com

For Discount Cub Cadet Parts Call 606-678-9623 or 606-561-4983

Ref #	Part Number	Qty	S/P/F	Description
	MA-19641401000	1		Gear Case Ass'y. Includes items 1-13
1	MA-19061411000	1		Case, Differential
2	MA-10211412001	2		Pinion, Diff.
3	MA-10211413001	2		Gear, Side
4	MA-10211414000	1		Shaft, Pinion
6	MA-10211415001	2		Washer, Thrust
7	MA-10211416001	2		Washer, Thrust
8	MA-10211417000	4	F	Washer, Lock
10	MA-19641412000	1		7-35 Ring Gear/Pinion Set Includes Item 9
10	MA-19641412001	1		7-35 Ring Gear/Pinion Set Includes Item 9
12	MA-A0400110020	8	F	Bolt, M10-1.50
	MA-10131404000	8	F	Bolt, M10-1.25
13	MA-05500006040	1		Pin, Spring
9	MA-19641412000	1		7-35 Ring Gear/Pinion Set Includes Item 10
9	MA-19641412001	1		7-35 Ring Gear/Pinion Set Includes Item 10
15	MA-19641431000	1		Holder, L.H.
16	MA-19641432000	1		Holder, R.H.
18	MA-19641434000	2		Liner
	MA-19641445000	1		Liner, Set Includes items 20-22
20	MA-19641435000	AR		Liner
21	MA-19641436000	AR		Liner
22	MA-19641437000	AR		Liner
24	MA-10211438000	2		Bearing
25	MA-F1540108025	12		Bolt
26	MA-07410009501	2		Ring
27	MA-19641439AG0	1		Shifter
	MA-10191806000	1		Shim Set Includes items 31,32
31	MA-07310001504	AR		Liner t=0.4
32	MA-07310001512	AR		Liner t=1.2
33	MA-08300100120	1	S	O-Ring
34	MA-08340020070	1		Seal Cap
36	MA-19641438000	1		Arm
37	MA-03500151026	1		Washer
38	MA-A3600100802	2		Washer
39	MA-A3010108002	2		Nut
40	MA-19641441AG1	1		Pedal, Diff. Lock
42	MA-08300100160	1	/P	O-Ring
44	MA-07400002000	2		Ring
46		1		Pin, Spring Not used on this application
50	MA-10251135000	1		Ball Joint, Left Hand Thread
51	MA-A3032110002	1		Nut, Left Hand Thread
52	MA-10311814000	1		Rod
55	MA-37041577000	1		Joint, Ball
56	MA-A3030110002	2		Nut
58		1		Pedal, Diff. Lock Not used on this application
59		1		Arm, Diff. Not used on this application
61	MA-A3600101002	1	/P	Washer
	MA-19631417000	1		Liner Set Includes items 63,64
63	MA-07310002004	AR		Liner t=0.4
64	MA-07310002010	AR		Liner t=1.0
65	MA-10320228000	1		Cover, Pedal
66	MA-19641446000	1		Plate, Guide

www.mymowerparts.com

For Discount Cub Cadet Parts Call 606-678-9623 or 606-561-4983

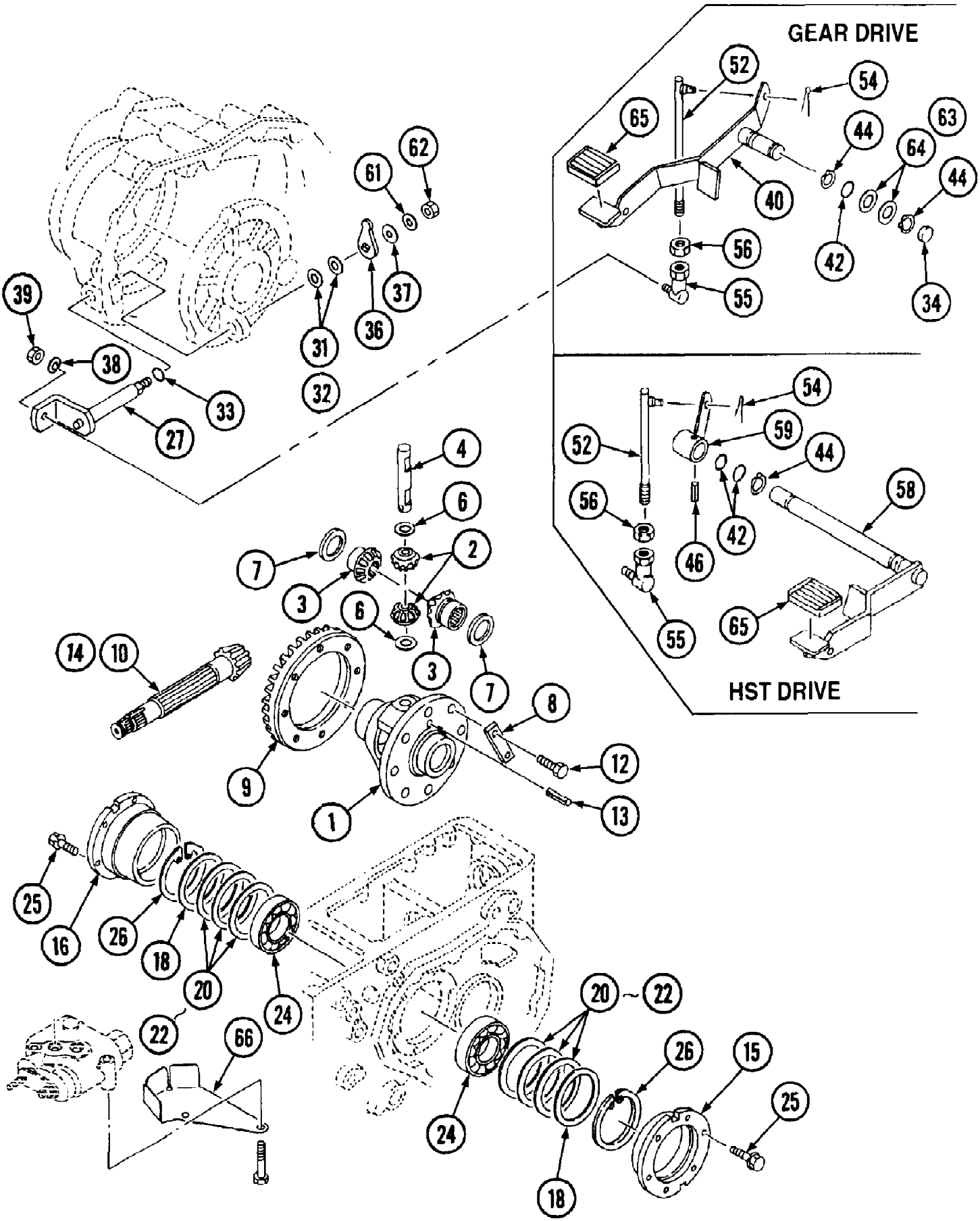

www.mymowerparts.com

For Discount Cub Cadet Parts Call 606-678-9623 or 606-561-4983

Ref #	Part Number	Qty	S/P/F	Description
	MA-19641415000	1		Diff.Case Ass'y. Includes Items 1 - 9 & 12 - 14
		1		Gear Case Ass'y.
1	MA-19061411000	1		Case Diff.
2	MA-10211412001	2		Pinion Diff.
3	MA-10211413001	2		Gear, Side
4	MA-10211414000	1		Shaft, Pinion
6	MA-10211415001	2		Washer, Thrust
7	MA-10211416001	2		Washer, Thrust
8	MA-10211417000	4		Washer, Lock
9	MA-19641416000	1		7-35 Gear Set, Includes Item 14
10		1		Shaft, Pinion Not used on this application
12	MA-A0400110020	8		Bolt
13	MA-05500006040	1		Pin, Spring
14	MA-19641416000	1		7-35 Gear Set, Includes Item 9
15	MA-19641431000	1		Holder L.H.
16	MA-19641432000	1		Holder R.H.
18	MA-19641434000	2		Liner
	MA-19641445000	1		Liner Set Includes Items 20 - 22
20	MA-19641435000	AR		Liner
21	MA-19641436000	AR		Liner
22	MA-19641437000	AR		Liner
24	MA-10211438000	2		Bearing
25	MA-F1540108025	12		Bolt
26	MA-07410009501	2		Ring
27	MA-19641439AG0	1		Shifter
	MA-10191806000	1		Shim Set Includes Items 31 & 32
31	MA-07310001504	AR		Liner t=0.4
32	MA-07310001512	AR		Liner t=1.2
33	MA-08300100120	1	S	O-Ring
34		1		Seal Cap Not used on this application
36	MA-19641438000	1		Arm
37	MA-03500151026	1		Washer
38	MA-A3600100802	1		Washer
39	MA-A3010108002	1		Nut
40		1		Pedal Diff. Lock Not used on this application
42	MA-08300100160	2	/P	O-Ring
44	MA-07400002000	1		Ring
46	MA-05500008040	1		Pin, Spring
52	MA-19641442000	1		Rod
54	MA-05200130020	1		Pin, Split
55	MA-37041577000	1		Joint Ball
56	MA-A3030110002	1		Nut
58	MA-19641443AG0	1		Pedal Diff. Lock
59	MA-19641444AG0	1		Arm, Diff.
61	MA-A3600101002	1	/P	Washer
62	MA-A3030110002	1		Nut
63		1		Liner t=0.4 Not used on this application
64		1		Liner t=1.0 Not used on this application
65	MA-10320228000	1		Cover Pedal
66	MA-19641446000	1		Plate, Guide

www.mymowerparts.com

For Discount Cub Cadet Parts Call 606-678-9623 or 606-561-4983

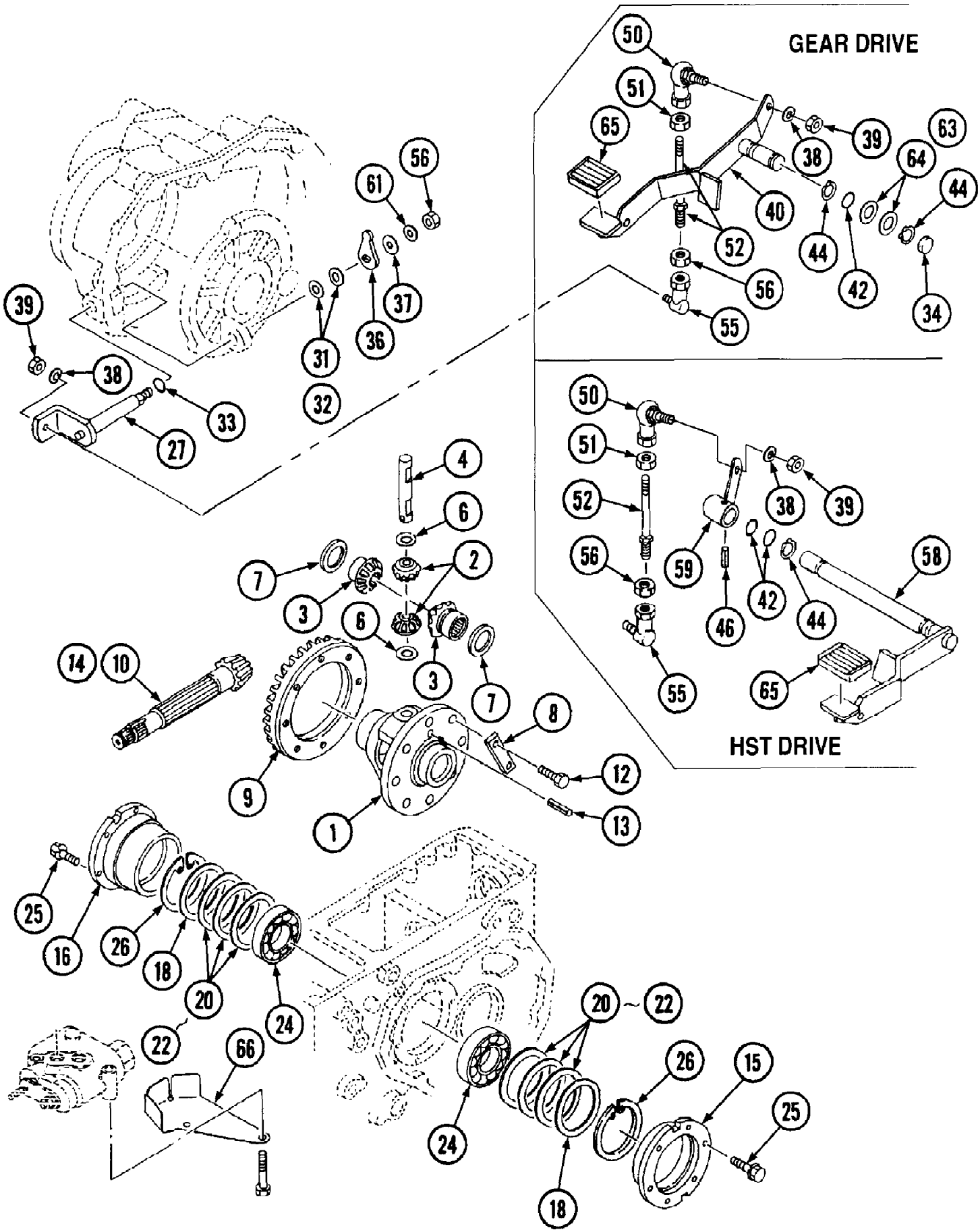

www.mymowerparts.com

For Discount Cub Cadet Parts Call 606-678-9623 or 606-561-4983

Ref #	Part Number	Qty	S/P/F	Description
	MA-19641415000	1		Diff. Case Ass'y. Includes items 1-9, 12-14
		1		Gear Case Ass'y.
1	MA-19061411000	1		Case, Differential
2	MA-10211412001	2		Pinion, Diff.
3	MA-10211413001	2		Gear, Side
4	MA-10211414000	1		Shaft, Pinion
6	MA-10211415001	2		Washer, Thrust
7	MA-10211416001	2		Washer, Thrust
8	MA-10211417000	4	F	Washer, Lock
9	MA-19641416000	1		7-35 Ring Gear/Pinion Set Includes Item 14
9	MA-19641416001	1		7-35 Ring Gear/Pinion Set Includes Item 14
12	MA-A0400110020	8	F	Bolt, M10-1.50
	MA-10131404000	8	F	Bolt, M10-1.25
13	MA-05500006040	1		Pin, Spring
14	MA-19641416000	1		7-35 Ring Gear/Pinion Set Includes Item 9
14	MA-19641416001	1		7-35 Ring Gear/Pinion Set Includes Item 9
15	MA-19641431000	1		Holder, L.H.
16	MA-19641432000	1		Holder, R.H.
18	MA-19641434000	2		Liner
	MA-19641445000	1		Liner, Set Includes items 20-22
20	MA-19641435000	AR		Liner
21	MA-19641436000	AR		Liner
22	MA-19641437000	AR		Liner
24	MA-10211438000	2		Bearing
25	MA-F1540108025	12		Bolt
26	MA-07410009501	2		Ring
27	MA-19641439AG0	1		Shifter
	MA-10191806000	1		Shim Set Includes items 31,32
31	MA-07310001504	AR		Liner t=0.4
32	MA-07310001512	AR		Liner t=1.2
33	MA-08300100120	1	S	O-Ring
34		1		Seal Cap Not used on this application
36	MA-19641438000	1		Arm
37	MA-03500151026	1		Washer
38	MA-A3600100802	2		Washer
39	MA-A3010108002	2		Nut
40		1		Pedal, Diff. Lock Not used on this application
42	MA-08300100160	2	/P	O-Ring
44	MA-07400002000	1		Ring
46	MA-05500008040	1		Pin, Spring
50	MA-10251135000	1		Ball Joint, Left Hand Thread
51	MA-A3032110002	1		Nut, Left Hand Thread
52	MA-10311814000	1		Rod
55	MA-37041577000	1		Joint, Ball
56	MA-A3030110002	2		Nut
58	MA-19641443AG0	1		Pedal, Diff. Lock
59	MA-19641444AG1	1		Arm, Diff.
61	MA-A3600101002	1	/P	Washer
		1		Liner Set Includes items 63,64; Not used on this application
63		1		Liner t=0.4 Not used on this application
64		1		Liner t=1.0 Not used on this application

www.mymowerparts.com

For Discount Cub Cadet Parts Call 606-678-9623 or 606-561-4983

Ref #	Part Number	Qty	S/P/F	Description
65	MA-10320228000	1		Cover, Pedal
66	MA-19641446000	1		Plate, Guide

www.mymowerparts.com

For Discount Cub Cadet Parts Call 606-678-9623 or 606-561-4983

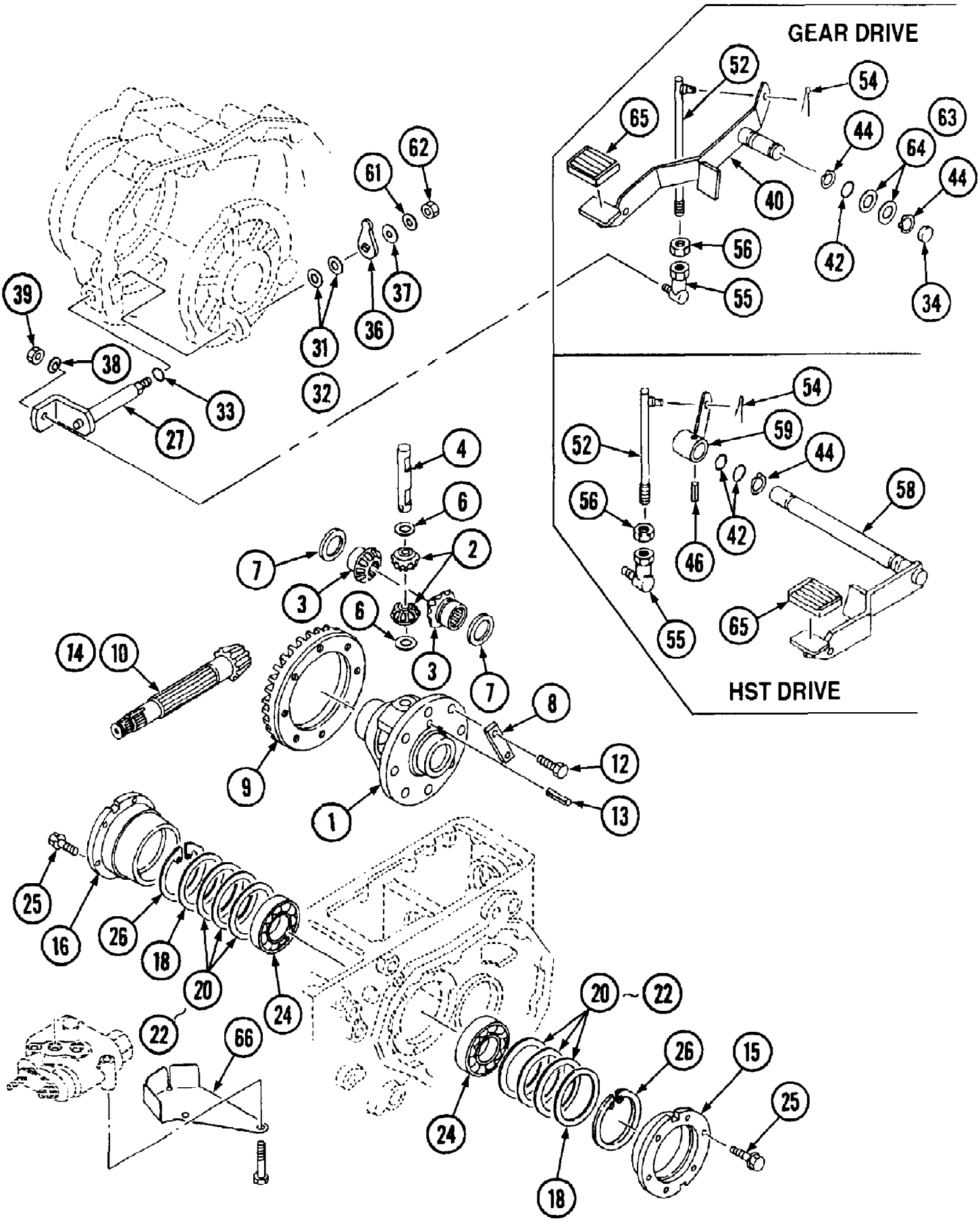

www.mymowerparts.com

For Discount Cub Cadet Parts Call 606-678-9623 or 606-561-4983

Ref #	Part Number	Qty	S/P/F	Description
	MA-19641401000	1		Gear Case Ass'y. Includes Items 1 - 13
1	MA-19061411000	1		Case Diff.
2	MA-10211412001	2		Pinion Diff.
3	MA-10211413001	2		Gear, Side
4	MA-10211414000	1		Shaft, Pinion
6	MA-10211415001	2		Washer, Thrust
7	MA-10211416001	2		Washer, Thrust
8	MA-10211417000	4		Washer, Lock
9	MA-19641412000	1		7-35 Gear Set, Includes Item 10
9		1		Gear Ring
10	MA-19641412000	1		7-35 Gear Set, Includes Item 9
12	MA-A0400110020	8		Bolt
13	MA-05500006040	1		Pin, Spring
14		1		Shaft, Pinion Not used on this application
15	MA-19641431000	1		Holder L.H.
16	MA-19641432000	1		Holder R.H.
18	MA-19641434000	2		Liner
	MA-19641445000	1		Liner Set Includes Items 20 - 22
20	MA-19641435000	AR		Liner
21	MA-19641436000	AR		Liner
22	MA-19641437000	AR		Liner
24	MA-10211438000	2		Bearing
25	MA-F1540108025	12		Bolt
26	MA-07410009501	2		Ring
27	MA-19641439AG0	1		Shifter
	MA-10191806000	1		Shim Set Includes Items 31 & 32
31	MA-07310001504	AR		Liner t=0.4
32	MA-07310001512	AR		Liner t=1.2
33	MA-08300100120	1	S	O-Ring
34		1		Seal Cap Not used on this application
36	MA-19641438000	1		Arm
37	MA-03500151026	1		Washer
38	MA-A3600100802	1		Washer
39	MA-A3010108002	1		Nut
40		1		Pedal Diff. Lock Not used on this application
42	MA-08300100160	2	/P	O-Ring
44	MA-07400002000	1		Ring
46	MA-05500008040	1		Pin, Spring
52	MA-19641442000	1		Rod
54	MA-05200130020	1		Pin, Split
55	MA-37041577000	1		Joint Ball
56	MA-A3030110002	1		Nut
58	MA-19641443AG0	1		Pedal Diff. Lock
59	MA-19641444AG0	1		Arm, Diff.
61	MA-A3600101002	1	/P	Washer
62	MA-A3030110002	1		Nut
63		1		Liner t=0.4 Not used on this application
64		1		Liner t=1.0 Not used on this application
65	MA-10320228000	1		Cover Pedal
66	MA-19641446000	1		Plate, Guide

www.mymowerparts.com

For Discount Cub Cadet Parts Call 606-678-9623 or 606-561-4983

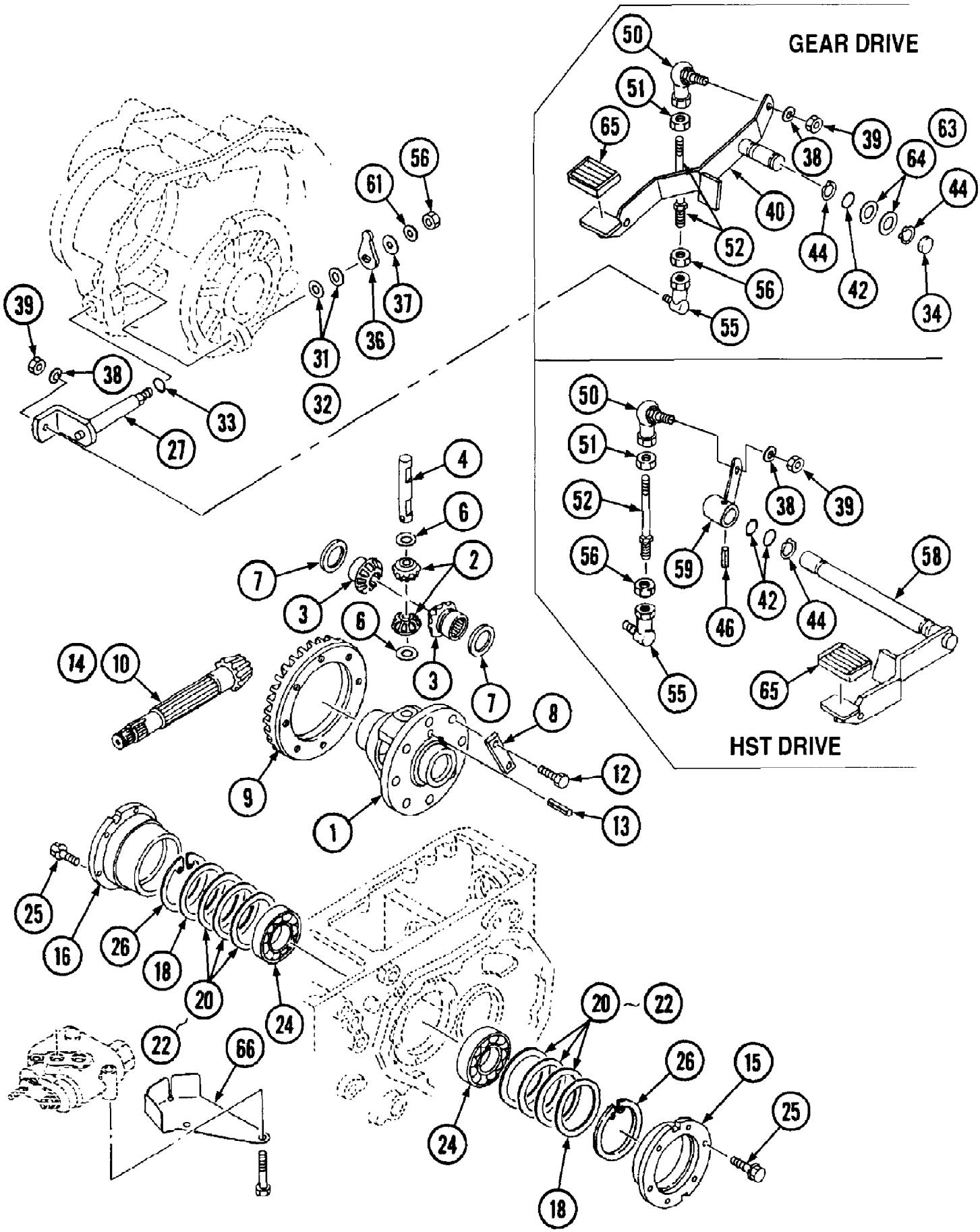

www.mymowerparts.com

For Discount Cub Cadet Parts Call 606-678-9623 or 606-561-4983

Ref #	Part Number	Qty	S/P/F	Description
	MA-19641401000	1		Gear Case Ass'y. Includes items 1-13
1	MA-19061411000	1		Case, Differential
2	MA-10211412001	2		Pinion, Diff.
3	MA-10211413001	2		Gear, Side
4	MA-10211414000	1		Shaft, Pinion
6	MA-10211415001	2		Washer, Thrust
7	MA-10211416001	2		Washer, Thrust
8	MA-10211417000	4	F	Washer, Lock
10	MA-19641412000	1		7-35 Ring Gear/Pinion Set Includes Item 9
10	MA-19641412001	1		7-35 Ring Gear/Pinion Set Includes Item 9
12	MA-A0400110020	8	F	Bolt, M10-1.50
	MA-10131404000	8	F	Bolt, M10-1.25
13	MA-05500006040	1		Pin, Spring
9	MA-19641412000	1		7-35 Ring Gear/Pinion Set Includes Item 10
9	MA-19641412001	1		7-35 Ring Gear/Pinion Set Includes Item 10
15	MA-19641431000	1		Holder, L.H.
16	MA-19641432000	1		Holder, R.H.
18	MA-19641434000	2		Liner
	MA-19641445000	1		Liner, Set Includes items 20-22
20	MA-19641435000	AR		Liner
21	MA-19641436000	AR		Liner
22	MA-19641437000	AR		Liner
24	MA-10211438000	2		Bearing
25	MA-F1540108025	12		Bolt
26	MA-07410009501	2		Ring
27	MA-19641439AG0	1		Shifter
	MA-10191806000	1		Shim Set Includes items 31,32
31	MA-07310001504	AR		Liner t=0.4
32	MA-07310001512	AR		Liner t=1.2
33	MA-08300100120	1	S	O-Ring
34		1		Seal Cap Not used on this application
36	MA-19641438000	1		Arm
37	MA-03500151026	1		Washer
38	MA-A3600100802	2		Washer
39	MA-A3010108002	2		Nut
40		1		Pedal, Diff. Lock Not used on this application
42	MA-08300100160	2	/P	O-Ring
44	MA-07400002000	1		Ring
46	MA-05500008040	1		Pin, Spring
50	MA-10251135000	1		Ball Joint, Left Hand Thread
51	MA-A3032110002	1		Nut, Left Hand Thread
52	MA-10311814000	1		Rod
55	MA-37041577000	1		Joint, Ball
56	MA-A3030110002	2		Nut
58	MA-19641443AG0	1		Pedal, Diff. Lock
59	MA-19641444AG1	1		Arm, Diff.
61	MA-A3600101002	1	/P	Washer
		1		Liner Set Includes items 63,64; Not used on this application
63		1		Liner t=0.4 Not used on this application
64		1		Liner t=1.0 Not used on this application
65	MA-10320228000	1		Cover, Pedal

www.mymowerparts.com

For Discount Cub Cadet Parts Call 606-678-9623 or 606-561-4983

Ref #	Part Number	Qty	S/P/F	Description
66	MA-19641446000	1		Plate, Guide

www.mymowerparts.com

For Discount Cub Cadet Parts Call 606-678-9623 or 606-561-4983

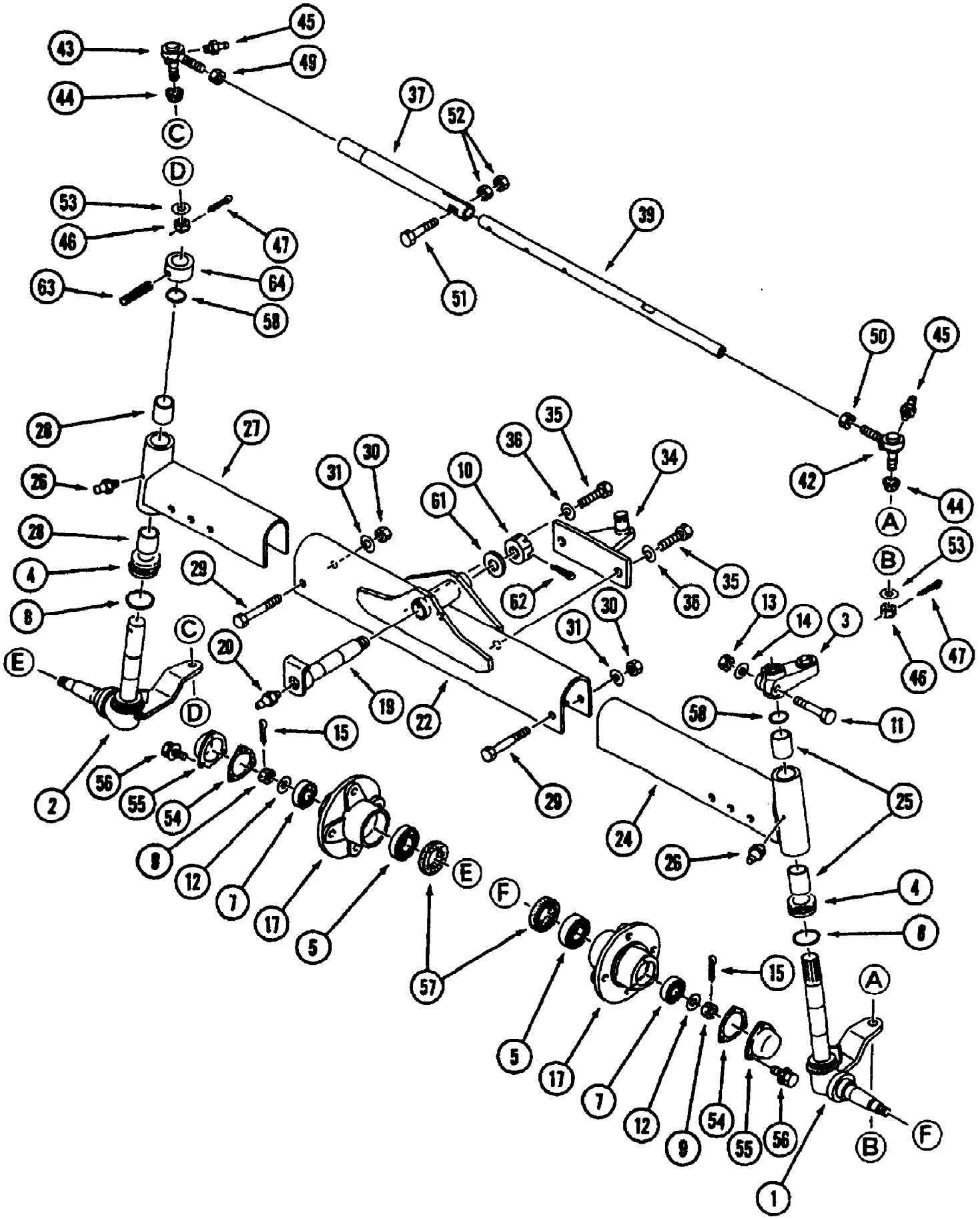

www.mymowerparts.com

For Discount Cub Cadet Parts Call 606-678-9623 or 606-561-4983

Ref #	Part Number	Qty	S/P/F	Description
1	MA-19642055AG0	1		Knuckle, L.H.
2	MA-19642057AG0	1	/P	Knuckle, R.H.
3	MA-19642059AG0	1		Arm, Knuckle
4	MA-07600051106	2		Bearing
5	MA-07500062060	2		Bearing
7	MA-07500063040	2		Bearing
8	MA-08301100420	2		O-Ring
9	MA-A3130101601	2		Nut
10	MA-A3130102401	1		Nut
11	MA-A0550110060	1		Bolt
12	MA-03500051632	2	S	Washer
13	MA-A3030110002	1		Nut
14	MA-A3600101002	1	/P	Washer
15	MA-05200140032	2		Pin, Split
17	MA-10312019AG0	2		Hub, Front Wheel
19	MA-19642065AG1	1		Pin, Center
20	MA-A6503100300	1	/P	Nipple, Grease
22	MA-19642071AG0	1	/P	Center, Front
	MA-19642073AG0	1		Axle, Outer Ass'y. Includes Items 24 & 25
24	MA-19642075AG0	1		Outer, L.H.
25	MA-67341-01300	2		Bushing
26	MA-A6503100300	2	/P	Nipple, Grease
	MA-19642077AG0	1		Axle, Outer Ass'y. Includes Items 27 & 28
27	MA-19642079AG0	1		Outer, R.H.
28	MA-67341-01300	2		Bushing
29	MA-A0550114100	2		Bolt
30	MA-A3030114002	2		Nut
31	MA-A3600101402	2		Washer
34	MA-19642082AG0	1		Bracket
35	MA-F1025-16050	3	S	Bolt
36	MA-A3600101602	3		Washer
	MA-19642083AG0	1		Tie Rod Ass'y. Includes Items 37 - 52
37	MA-10302022AG0	1	/P	Tube-Tie Rod (L.H. Thread)
39	MA-19642084AG0	1	S	Tube-Inner Tie Rod (R.H. Thread)
42	MA-10302157AG0	1	/P	End Ass'y.-Tie Rod L.H. Side (R.H. Thread) Includes Ref. Nos. 44 Thru 47
43	MA-10302158AG0	1	/P	End Ass'y.-Tie Rod R.H. Side (L.H. Thread) Includes Ref. Nos. 44 Thru 47
44	MA-67441-00916	2	S	Cover, Dust
45	MA-A6500600600	2		Nipple, Grease
46	MA-67441-00918	2		Nut
47	MA-05200130025	2		Pin, Split
49	MA-67354-00301	1		Nut (L.H. Thread) M17
50	MA-67354-00201	1		Nut (R.H. Thread) M17
51	MA-F1025-08045	1	S	Bolt
52	MA-A0710108001	2	S	Nut
53	MA-19642085000	2		Washer
54	MA-69541-06400	2		Gasket
55	MA-19832048AG0	2		Cap
56	MA-F1440106012	6		Bolt
57	MA-08401406211	2		Oil Seal
58	MA-08301100290	2		O-Ring

www.mymowerparts.com

For Discount Cub Cadet Parts Call 606-678-9623 or 606-561-4983

Ref #	Part Number	Qty	S/P/F	Description
61	MA-03500172450	1		Washer
62	MA-05200150040	1		Pin, Split
63	MA-05500008050	1		Pin, Spring
64	MA-11742035AG1	1		Boss

www.mymowerparts.com

For Discount Cub Cadet Parts Call 606-678-9623 or 606-561-4983

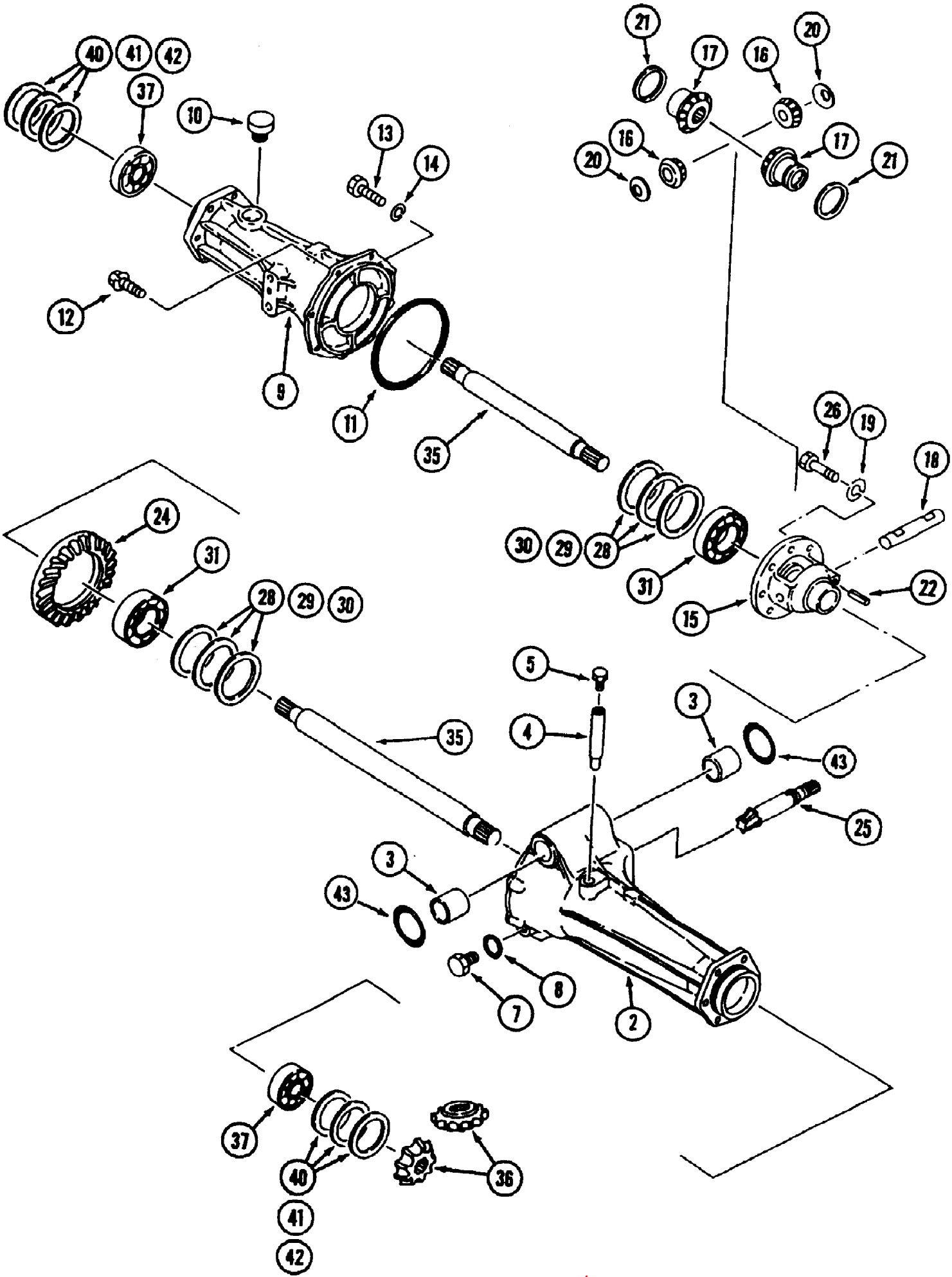

www.mymowerparts.com

For Discount Cub Cadet Parts Call 606-678-9623 or 606-561-4983

Ref #	Part Number	Qty	S/P/F	Description
	MA-19642101AG3	1		Front Axle,MFD Ass'y. This Part No. includes all parts from "Front Axle MFD" except Ref's.18-23 on "(part 2)"
	MA-19642111AG2	1		Housing, A Ass'y. Includes Items 2 & 3
2	MA-19642112AG2	1	/P	Housing, Axle A
3	MA-07961030400	2		Bushing
	MA-07963030400	2		Bushing Replaced Bushing MA-07961030400 when inventory is depleted
4	MA-19642117AG0	1		Pipe
5	MA-11190621000	1	/P	Plug, Vent
7	MA-F5000-16000	1		Plug, Drain
8	MA-08331001600	1		Washer, Seal
9	MA-10302119AG2	1	/P	Case B, Center
10	MA-11911211000	1		Oil Cap (A)
11	MA-08300501500	1		O-Ring
12	MA-F1550110030	7		Bolt
13	MA-69542-64700	1		Bolt
14	MA-A3600101002	1	/P	Washer
	MA-19642113001	1		Diff. Case Ass'y. Includes Items 15 - 26
15	MA-10312121000	1		Case, Diff
16	MA-10191412000	2		Pinion Mate
17	MA-10191413000	2		Gear, Side
18	MA-10191414000	1		Shaft, Pinion
19	MA-A3600101002	8	/P	Washer
20	MA-10191415000	2		Washer, Thrust
21	MA-10191416000	2		Washer, Thrust
22	MA-05500006040	1		Pin,Spring
	MA-19642114000	1		Pinion,Shaft Sub Set Includes Items 24 & 25
24		1		Gear,Ring
25		1		Shaft, Pinion
26	MA-10312132000	8		Bolt
	MA-12186568000	8		Bolt
	MA-10190623000	1		Shim Set Includes Items 28 - 30
28	MA-10070618000	AR		Liner t=0.1
29	MA-10070618100	AR		Liner t=0.2
30	MA-10070618200	AR		Liner t=0.4
31	MA-07500060100	2		Bearing
35	MA-10302128000	2		Shaft, Diff
36	MA-19642118000	4		Gear, 15T
37	MA-07500063050	2		Bearing
	MA-10190626000	1		Shim Set, Pinion Includes Items 40 - 42
40	MA-11353016000	AR		Liner
41	MA-07310002502	AR		Liner t=0.2
42	MA-07310002504	AR		Liner t=0.4
43	MA-08300100290	2		O-Ring

www.mymowerparts.com

For Discount Cub Cadet Parts Call 606-678-9623 or 606-561-4983

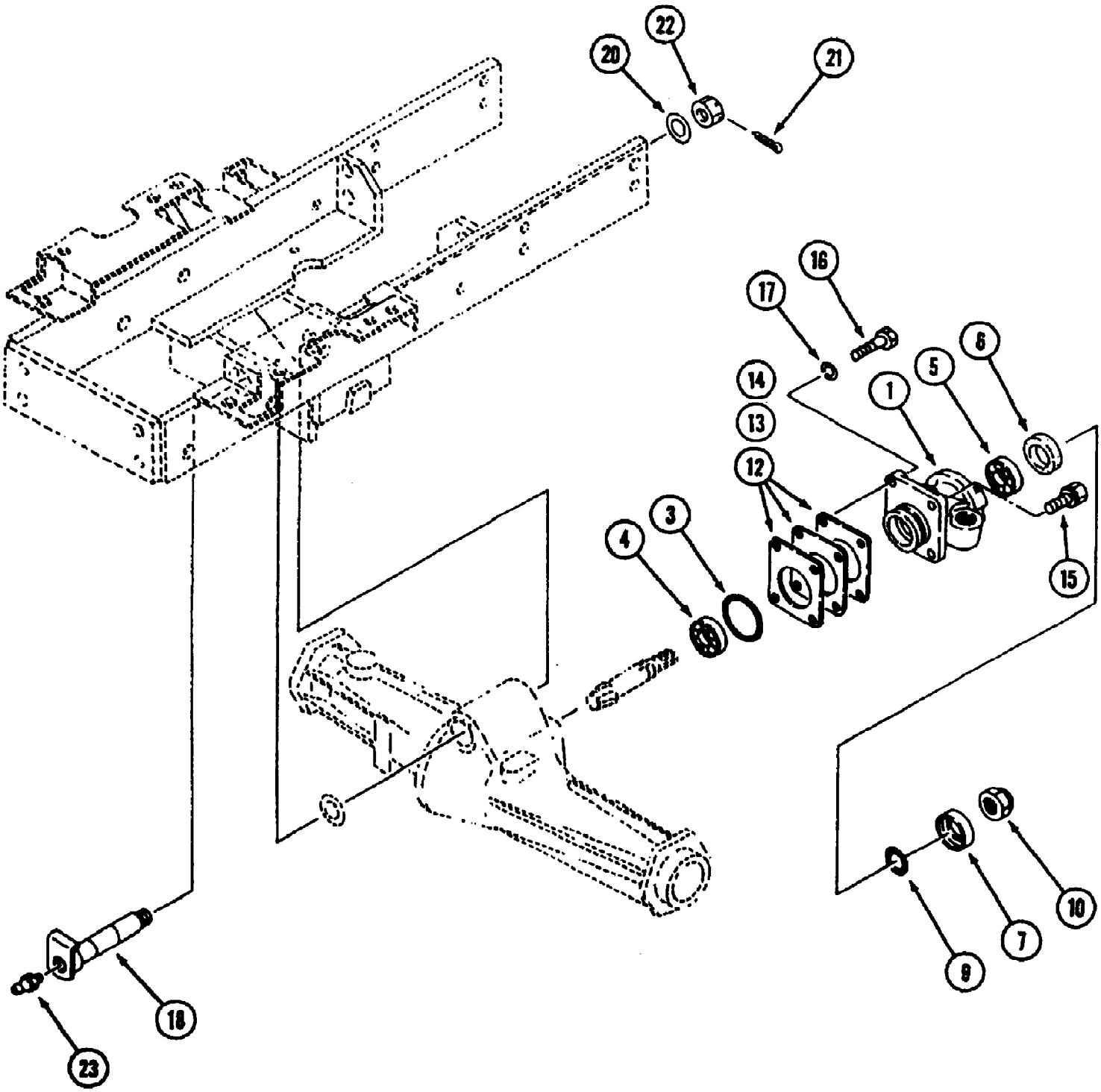

www.mymowerparts.com

For Discount Cub Cadet Parts Call 606-678-9623 or 606-561-4983

Ref #	Part Number	Qty	S/P/F	Description
1	MA-19642116AG0	1		Case, Pinion
3	MA-08300500600	1		O-Ring
4	MA-10212141000	1		Bearing
5	MA-07700130205	1		Bearing
6	MA-08401035529	1		Seal, Oil
7	MA-10212171000	1		Bushing
9	MA-08300200250	1		O-Ring
10	MA-10302123000	1		Nut, M25
	MA-19642120000	1		Shim, Set Includes Items 12 - 14
12	MA-10232136001	AR		Shim
13	MA-10232137001	AR		Shim
14	MA-10232138001	AR		Shim
15	MA-F1550110030	3		Bolt
16	MA-69542-64700	1		Bolt
17	MA-A3600101002	1	/P	Washer
18	MA-19642065AG1	1		Pin, Center
20	MA-11352064000	1		Plate
21	MA-05200150040	1		Pin, Split
22	MA-A3130102401	1		Nut
23	MA-A6513100300	1	S	Nipple, Grease
	MA-A6503100300	1	/P	Nipple, Grease Replaces MA-A6513100300

www.mymowerparts.com

For Discount Cub Cadet Parts Call 606-678-9623 or 606-561-4983

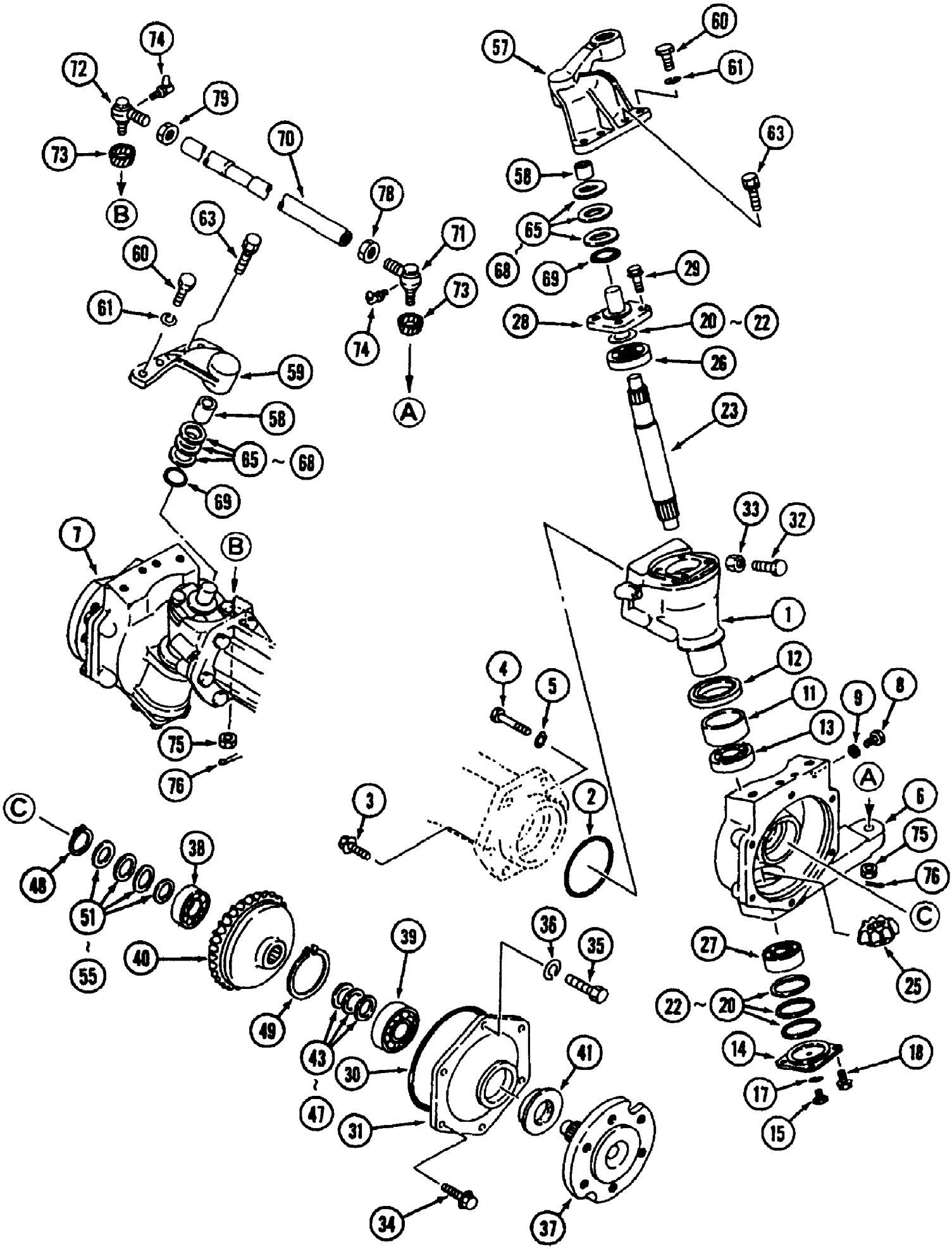

www.mymowerparts.com

For Discount Cub Cadet Parts Call 606-678-9623 or 606-561-4983

Ref #	Part Number	Qty	S/P/F	Description
1	MA-10302136AG0	2		Case, Kingpin
2	MA-08300500750	2		O-Ring
3	MA-F1550110030	10		Bolt
4	MA-69542-64700	2		Bolt
5	MA-A3600101002	1	/P	Washer
6	MA-19642121AG0	1		Case, Final L.H.
7	MA-19642122AG0	1		Case, Final R.H.
8	MA-27403214200	2		Plug
9	MA-08331000800	2		Seal, Washer
11	MA-07961050300	2		Bushing
12	MA-69542-65100	2		Seal, Oil
13	MA-07600051106	2		Bearing
14	MA-10070638AG1	2		Cover
15	MA-27403214200	2		Plug
17	MA-08331000800	2		Seal, Washer
18	MA-F1540108020	8		Bolt
	MA-19632139000	1		Shim, Set Includes Items 20 - 22
20	MA-07300005201	AR		Liner t=0.15
21	MA-07300005202	AR		Liner t=0.2
22	MA-07300005203	AR		Liner t=0.3
23	MA-19642124000	2		Shaft
25	MA-10212124000	2		Gear, 12T
26	MA-07500563044	2		Bearing
27	MA-07500263040	2		Bearing
28	MA-10212120AG0	2		Holder
29	MA-F1550110025	8		Bolt
30	MA-08300501450	2		O-Ring
31	MA-10212119AG0	2		Cover
32	MA-A0520110040	2		Bolt
33	MA-A3030110002	2		Nut
34	MA-F1550110025	10		Bolt
35	MA-69542-64700	2		Bolt
36	MA-A3600101002	2	/P	Washer
37	MA-19832112AG0	2		Shaft
38	MA-07500063050	2		Bearing
39	MA-07500063060	2		Bearing
40	MA-10212123000	2		Gear, 32T
41	MA-08412355212	2		Seal, Oil
	MA-10212159000	1		Shim Set Includes Items 43 - 47
43	MA-07310003001	AR		Liner t=0.15
44	MA-07310003004	AR		Liner t=0.4
45	MA-07310003008	AR		Liner t=0.8
46	MA-07310003010	AR		Liner t=1.0
47	MA-07310003012	AR		Liner t=1.2
48	MA-07400002500	2	/P	Ring
49	MA-07410007201	2		Ring
	MA-10212158000	1		Shim Set Includes Items 51 - 55
51	MA-11353016000	AR		Liner
52	MA-07310002504	AR		Liner t=0.4
53	MA-07310002508	AR		Liner t=0.8
54	MA-07310002510	AR	S	Liner t=1.0
55	MA-07310002512	AR		Liner t=1.2
57	MA-19642126AG0	1		Knuckle, Arm L.H.

www.mymowerparts.com

For Discount Cub Cadet Parts Call 606-678-9623 or 606-561-4983

Ref #	Part Number	Qty	S/P/F	Description
58	MA-07961025250	2		Bushing
59	MA-19642127AG0	1	/P	Knuckle, Arm R.H.
60	MA-69542-63301	4		Bolt
61	MA-A3600101202	4		Washer
63	MA-F1550112025	4		Bolt
	MA-10212157000	1		Shim Set Includes Items 65 - 68
65	MA-14381319300	AR		Liner, Thrust
66	MA-14381319400	AR		Liner, Thrust
67	MA-14381319500	AR		Liner, Thrust
68	MA-14381319600	AR		Liner, Thrust
69	MA-08300100240	2		O-Ring
	MA-19642131AG0	1		Tie Rod Ass'y. Includes Items 70 - 79
70	MA-19642132AG0	1	/P	Rod
71	MA-10302157AG0	1	/P	End Ass'y-Tie Rod L.H. Side (R.H. Thread) Includes Ref. Nos. 73 Thru 76
72	MA-10302158AG0	1	/P	End Ass'y-Tie Rod R.H. Side (L.H. Thread) Includes Ref. Nos. 73 Thru 76
73	MA-67441-00916	2	S	Cover, Dust
74	MA-A6500600600	2		Nipple, Grease
75	MA-67441-00918	2		Nut
76	MA-05200130025	2		Pin, Split
78	MA-67354-00201	1		Nut (R.H. Thread) M17
79	MA-67354-00301	1		Nut (L.H. Thread) M17

www.mymowerparts.com

For Discount Cub Cadet Parts Call 606-678-9623 or 606-561-4983

Fuel Filter 30 HP Engine (7300 S/N 21932-Lower/7305 S/N 23069-Lower)

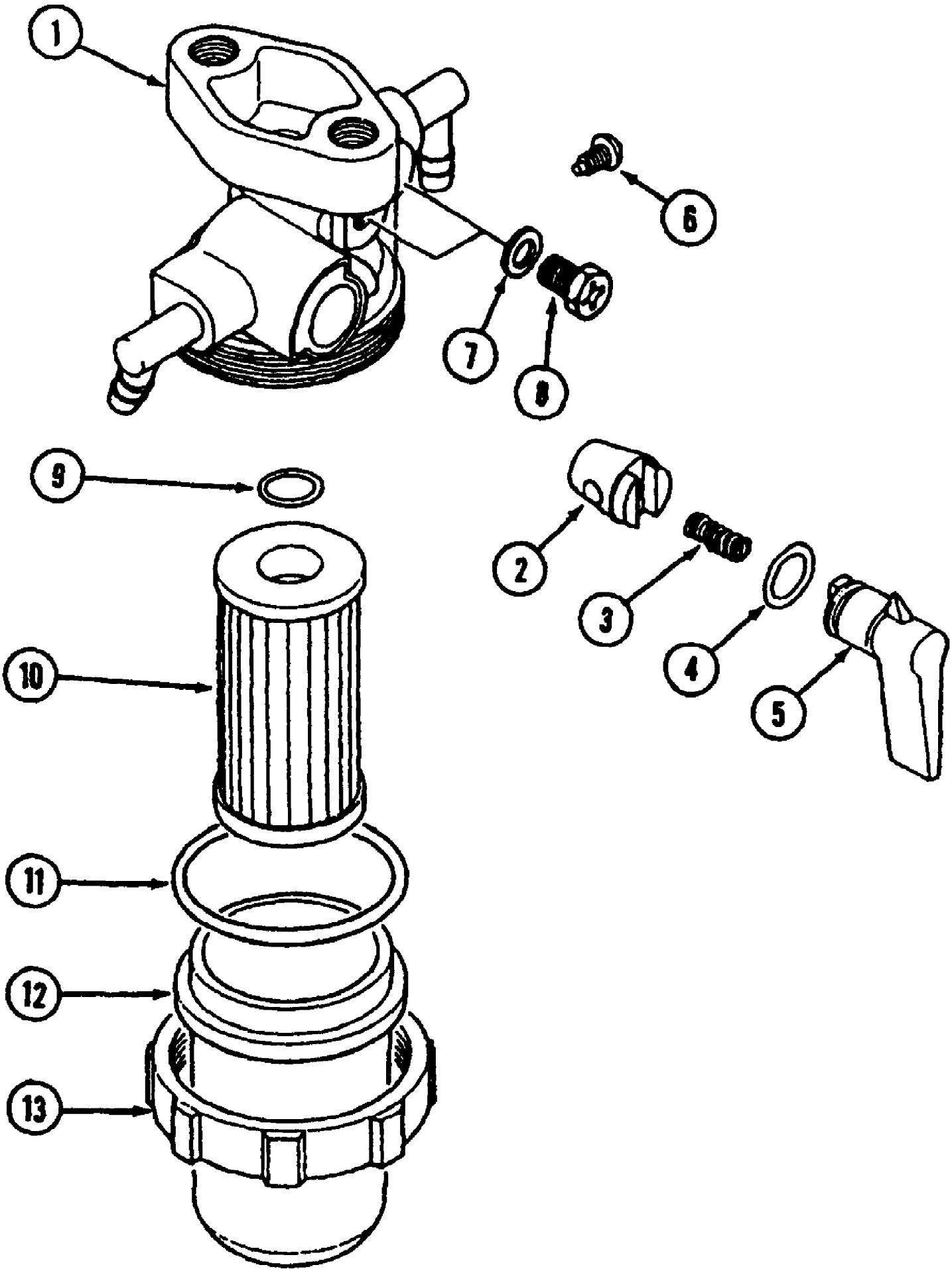

www.mymowerparts.com

For Discount Cub Cadet Parts Call 606-678-9623 or 606-561-4983

Fuel Filter 30 HP Engine (7300 S/N 21932-Lower/7305 S/N 23069-Lower)

Ref #	Part Number	Qty	S/P/F	Description
	MA-30A62-00100	1	/P	Filter Ass'y., Fuel Includes Items 1 - 13
1	MA-30A62-00110	1		Body Sub Ass'y., Fuel Filter Includes Item 2
2		1		Valve
3	MA-MM404873	1		Spring, Valve
4	MA-MM404874	1	S	O-Ring, Valve
5	MA-MM404871	1		Lever
6	MA-MM404875	1		Screw
7	MA-MM404884	2		Packing
8	MA-30A62-00105	2		Screw,Air Valve
	MA-MM409892	2	/P	Service Kit, Fuel Filter Includes Items 9 - 11
9	MA-MM404881	1	S	O-Ring, Element
10	MA-MM404879	1	S	Element
11	MA-MM404878	1		O-Ring, Filter Cup
12	MA-MM400889	1	/P	Cup, Filter
13	MA-MM404877	1		Nut,Ring

www.mymowerparts.com

For Discount Cub Cadet Parts Call 606-678-9623 or 606-561-4983

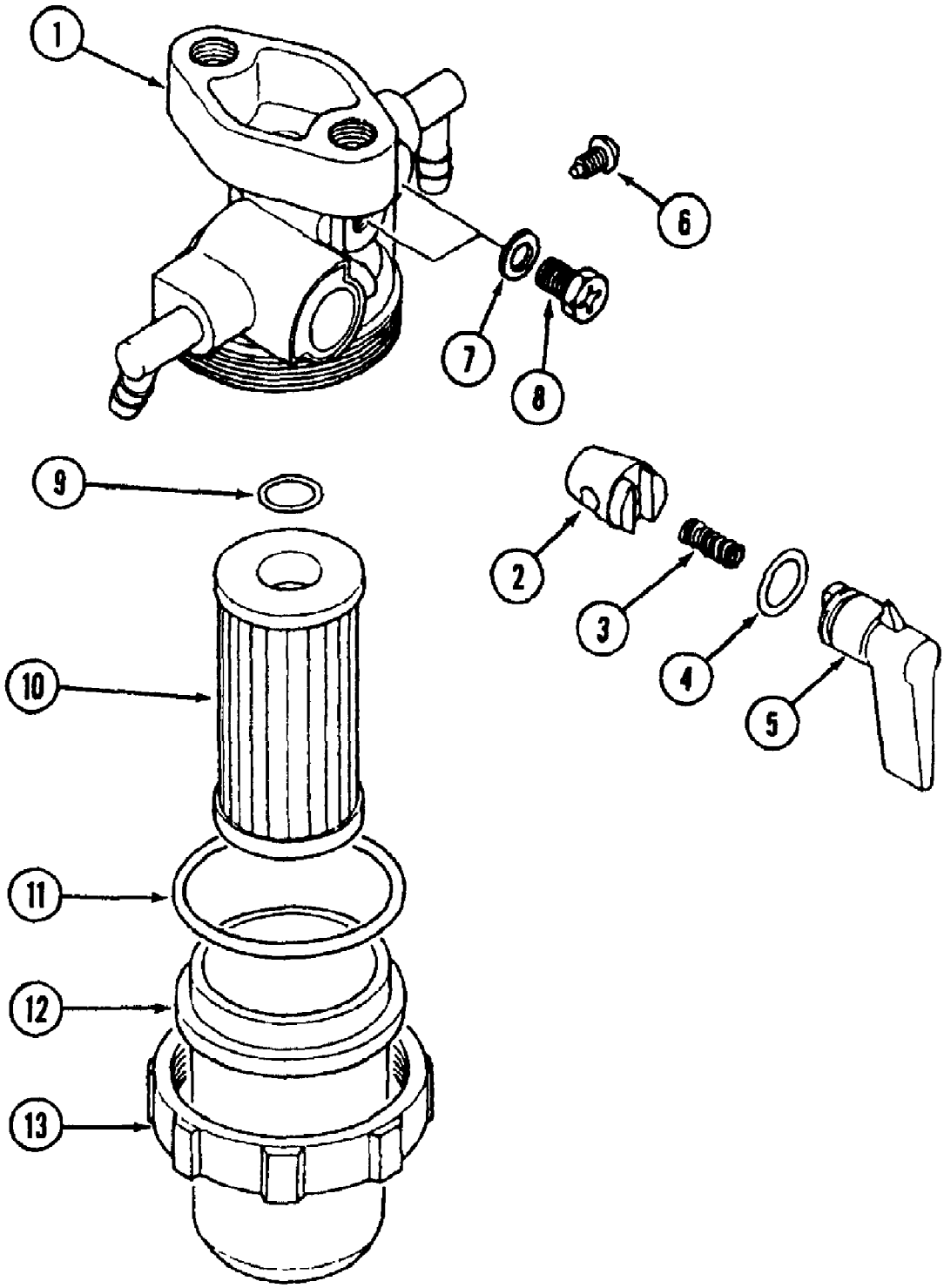

www.mymowerparts.com

For Discount Cub Cadet Parts Call 606-678-9623 or 606-561-4983

Fuel Filter 30HP Engine 7300 S/N 21933 & Up

Ref #	Part Number	Qty	S/P/F	Description
	MA-30A62-00100	1	/P	Filter Ass'y., Fuel Includes items 1-13
1	MA-30A62-00110	1		Body Sub Ass'y., Fuel Filter
2		1		Valve
3	MA-MM404873	1		Spring, Valve
4	MA-MM404874	1	S	O-Ring, Valve
5	MA-MM404871	1		Lever
6	MA-404875	1		Screw
7	MA-404884	2		Packing
8	MA-30A62-00105	2		Screw, Air Vent
	MA-MM409892	1	/P	Service Kit, Fuel Filter Includes items 9-11
9	MA-MM404881	1	S	O-Ring, Element
10	MA-MM404879	1	S	Element
11	MA-MM404878	1		O-Ring, Filter Cup
12	MA-MM400889	1	/P	Cup, Filter
13	MA-MM404877	1		Nut, Ring

www.mymowerparts.com

For Discount Cub Cadet Parts Call 606-678-9623 or 606-561-4983

Fuel Injection Pump 30HP Eng (7300 SN 21932-Lower/7305 SN 23069-Lower)

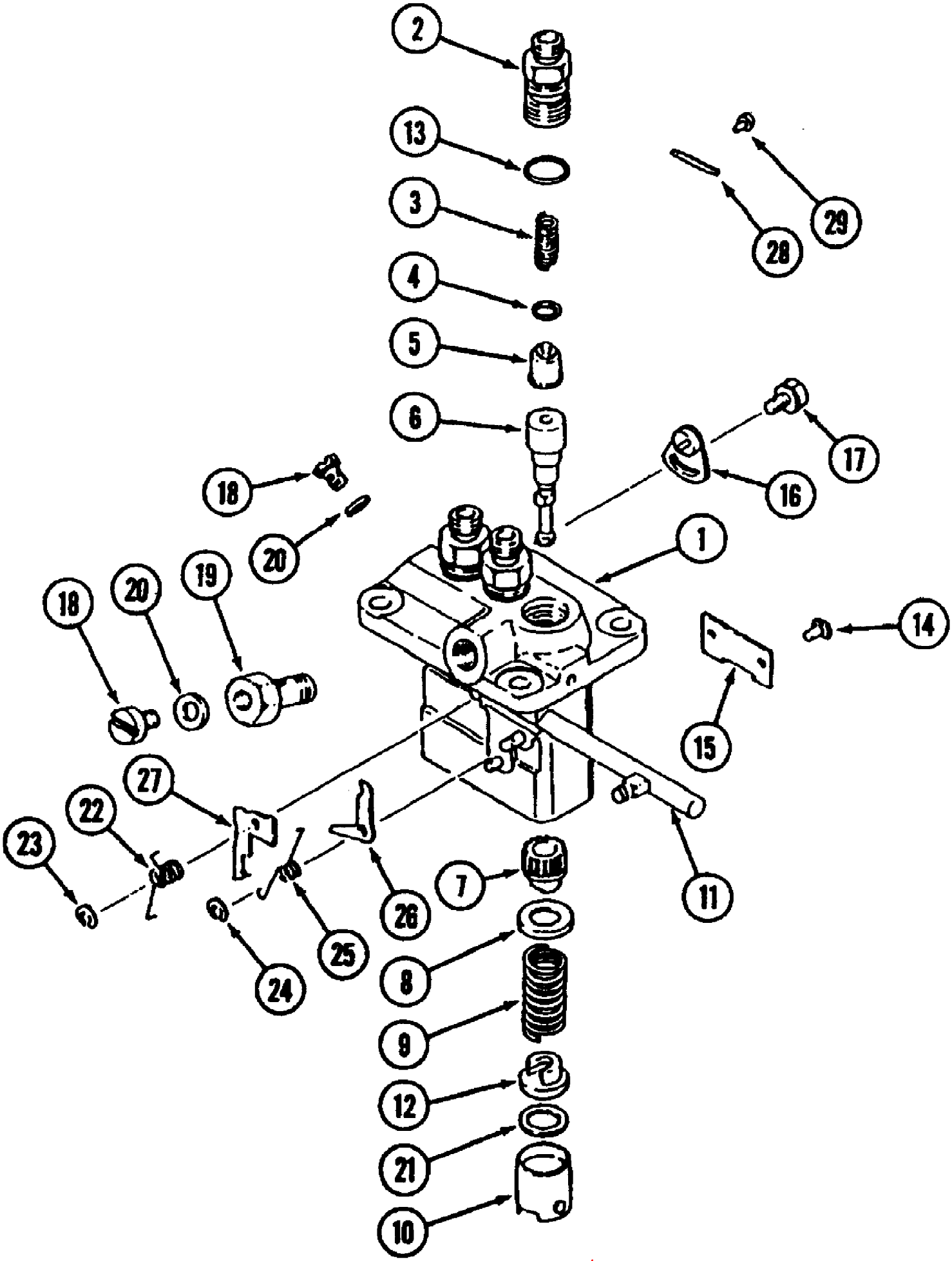

www.mymowerparts.com

For Discount Cub Cadet Parts Call 606-678-9623 or 606-561-4983

Fuel Injection Pump 30HP Eng (7300 SN 21932-Lower/7305 SN 23069-Lower)

Ref #	Part Number	Qty	S/P/F	Description
	MA-30H65-02100	1		Pump Ass'y., Fuel Injection Includes Items 1 - 29
1	MA-09011-02830	1		Housing, Sub Ass'y., Pump
2	MA-09013-10720	3	/P	Holder, Delivery Valve
3	MA-09013-60940	3	/P	Spring, Delivery Valve
4	MA-09013-70130	3	/P	Gasket, Delivery Valve
5	MA-09014-02100	3	/P	Valve Sub Ass'y.,Delivery
6	MA-09015-04650	3	/P	Element Sub Ass'y.,Pump
7	MA-09016-10210	3	/P	Sleeve, Control
8	MA-09016-30082	3		Seat, Spring Upper
9	MA-09016-40170	3	/P	Spring, Pump Plunger
10	MA-09017-00170	3	/P	Tappet Ass'y.
11	MA-09021-00470	1	/P	Pack Ass'y., Control
12	MA-09030-10060	3	/P	Seat, Spring Lower
13	MA-MM500438	3	S	O-Ring
14	MA-09018-30050	3	/P	Pin, Tappet Guide
15	MA-09046-70040	1	/P	Plate
16	MA-09006-80020	2	/P	Plate, Adjusting
17	MA-94904-80800	2		Bolt, Washer Hade
18	MA-09024-40180	2		Screw, Air Bleeder
19	MA-MM500442	1		Screw, Hollow
20	MA-94901-81020	2		Washer, Pipe Union
21	MA-MM500299	AR	S	Shim, Plate Tappet t=0.6
	MA-MM500309	AR	S	Shim, Plate Tappet t=0.2
	MA-MM500310	AR	S	Shim, Plate Tappet t=0.3
	MA-MM500311	AR	S	Shim, Plate Tappet t=0.4
	MA-MM500312	AR	S	Shim, Plate Tappet t=0.5
	MA-MM500314	AR	S	Shim, Plate Tappet t=0.025
	MA-MM500315	AR		Shim, Plate Tappet t=0.035
	MA-MM501246	AR	S	Shim, Plate Tappet t=0.045
	MA-MM501364	AR	S	Shim, Plate Tappet t=0.055
	MA-MM501365	AR	S	Shim, Plate Tappet t=0.065
22	MA-09055-40280	1		Spring, Smoke Set
23	MA-09089-40020	1		E-Ring
24	MA-09089-40010	1		E-Ring
25	MA-09055-40470	1		Spring, Angleich Set
26	MA-MM501497	AR		Plate, Angleich Set Mark 6
	MA-MM501498	AR		Plate, Angleich Set Mark 7
	MA-MM501499	AR		Plate, Angleich Set Mark 8
	MA-MM501500	AR		Plate, Angleich Set Mark 9
	MA-MM501501	AR		Plate, Angleich Set Mark 10
	MA-MM501747	AR		Plate, Angleich Set Mark 11
	MA-MM501748	AR		Plate, Angleich Set Mark 12
27	MA-MM501567	AR		Plate, Smoke Set Mark 62
	MA-MM501268	AR		Plate, Smoke Set Mark 63
	MA-MM501568	AR		Plate, Smoke Set Mark 64
	MA-MM501269	AR		Plate, Smoke Set Mark 65
	MA-MM501569	AR		Plate, Smoke Set Mark 66
	MA-MM501270	AR		Plate, Smoke Set Mark 67
	MA-MM501570	AR		Plate, Smoke Set Mark 68
	MA-MM501271	AR		Plate, Smoke Set Mark 69
	MA-MM501571	AR		Plate, Smoke Set Mark 70

www.mymowerparts.com

For Discount Cub Cadet Parts Call 606-678-9623 or 606-561-4983

Ref #	Part Number	Qty	S/P/F	Description
	MA-MM501272	AR		Plate, Smoke Set Mark 71
	MA-MM501572	AR		Plate, Smoke Set Mark 72
	MA-MM501273	AR		Plate, Smoke Set Mark 73
	MA-MM501573	AR		Plate, Smoke Set Mark 74
	MA-MM501274	AR		Plate, Smoke Set Mark 75
	MA-MM501575	AR		Plate, Smoke Set Mark 76
28	MA-09450-37030	1		Plate, Name
29	MA-MM500429	2		Rivet

www.mymowerparts.com

For Discount Cub Cadet Parts Call 606-678-9623 or 606-561-4983

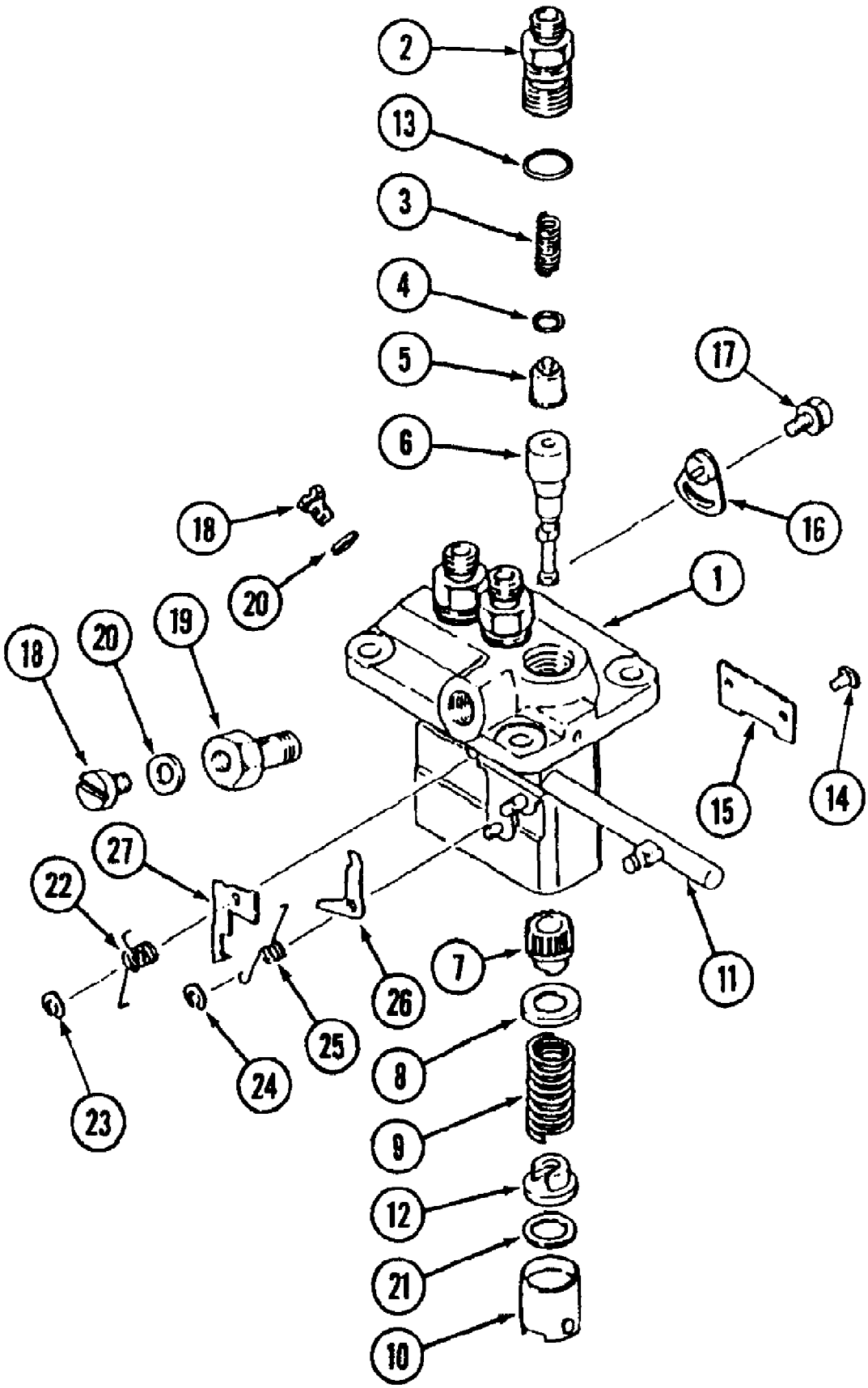

www.mymowerparts.com

For Discount Cub Cadet Parts Call 606-678-9623 or 606-561-4983

Fuel Injection Pump 30HP Engine 7300 S/N 21933 & Up

Ref #	Part Number	Qty	S/P/F	Description
	MA-30H65-05200	1		Pump Ass'y., Fuel Injection Includes items 1-29
1	MA-09011-02830	1		Housing Sub Ass'y., Pump
2	MA-09013-10720	3	/P	Holder, Delivery Valve
3	MA-09013-60940	3	/P	Spring, Delivery Valve
4	MA-09013-70130	3	/P	Gasket, Delivery Valve
5	MA-09014-02730	3		Valve Sub Ass'y., Delivery
6	MA-09015-06540	3		Element Sub Ass'y., Pump
7	MA-09016-10210	3	/P	Sleeve, Control
8	MA-09016-30082	3		Seat, Spring Upper
9	MA-09016-40170	3	/P	Spring, Pump Plunger
10	MA-09017-00170	3	/P	Tappet Ass'y.
11	MA-09021-00470	1	/P	Pack Ass'y., Control
12	MA-09030-10060	3	/P	Seat, Spring Lower
13	MA-90802-20150	3	/P	O-Ring
14	MA-09018-30050	3	/P	Pin, Tappet Guide
15	MA-09046-70040	1	/P	Plate
16	MA-09006-80020	2	/P	Plate, Adjusting
17	MA-94904-80800	2		Bolt, Washer Head
18	MA-09024-40180	2		Screw, Air Bleeder
19	MA-94918-00510	1		Screw, Hollow
20	MA-94901-81020	2		Washer, Pipe Union
21	MA-MM500299	AR	S	Shim, Plate Tappet t=0.6
	MA-MM500309	AR	S	Shim, Plate Tappet t=0.2
	MA-MM500310	AR	S	Shim, Plate Tappet t=0.3
	MA-MM500311	AR	S	Shim, Plate Tappet t=0.4
	MA-MM500312	AR	S	Shim, Plate Tappet t=0.5
	MA-MM500314	AR	S	Shim, Plate Tappet t=0.25
	MA-MM500315	AR		Shim, Plate Tappet t=0.35
	MA-MM501246	AR	S	Shim, Plate Tappet t=0.45
	MA-MM501364	AR	S	Shim, Plate Tappet t=0.55
	MA-MM501365	AR	S	Shim, Plate Tappet t=0.65
22	MA-09055-40390	1		Spring, Smoke Set
23	MA-09089-40020	1		E-Ring
24	MA-09089-40010	1		E-Ring
25	MA-09055-40470	1		Spring, Angleich Set
26	MA-MM501497	AR		Plate, Angleich Set Mark 6
	MA-MM501498	AR		Plate, Angleich Set Mark 7
	MA-MM501499	AR		Plate, Angleich Set Mark 8
	MA-MM501500	AR		Plate, Angleich Set Mark 9
	MA-MM501501	AR		Plate, Angleich Set Mark 10
	MA-MM501747	AR		Plate, Angleich Set Mark 11
	MA-MM501748	AR		Plate, Angleich Set Mark 12
27	MA-MM501567	AR		Plate, Smoke Set Mark 62
	MA-MM501268	AR		Plate, Smoke Set Mark 63
	MA-MM501568	AR		Plate, Smoke Set Mark 64
	MA-MM501269	AR		Plate, Smoke Set Mark 65
	MA-MM501569	AR		Plate, Smoke Set Mark 66
	MA-MM501270	AR		Plate, Smoke Set Mark 67
	MA-MM501570	AR		Plate, Smoke Set Mark 68
	MA-MM501271	AR		Plate, Smoke Set Mark 69
	MA-MM501571	AR		Plate, Smoke Set Mark 70

www.mymowerparts.com

For Discount Cub Cadet Parts Call 606-678-9623 or 606-561-4983

Ref #	Part Number	Qty	S/P/F	Description
	MA-MM501272	AR		Plate, Smoke Set Mark 71
	MA-MM501572	AR		Plate, Smoke Set Mark 72
	MA-MM501273	AR		Plate, Smoke Set Mark 73
	MA-MM501573	AR		Plate, Smoke Set Mark 74
	MA-MM501274	AR		Plate, Smoke Set Mark 75
	MA-MM501574	AR		Plate, Smoke Set Mark 76

www.mymowerparts.com

For Discount Cub Cadet Parts Call 606-678-9623 or 606-561-4983

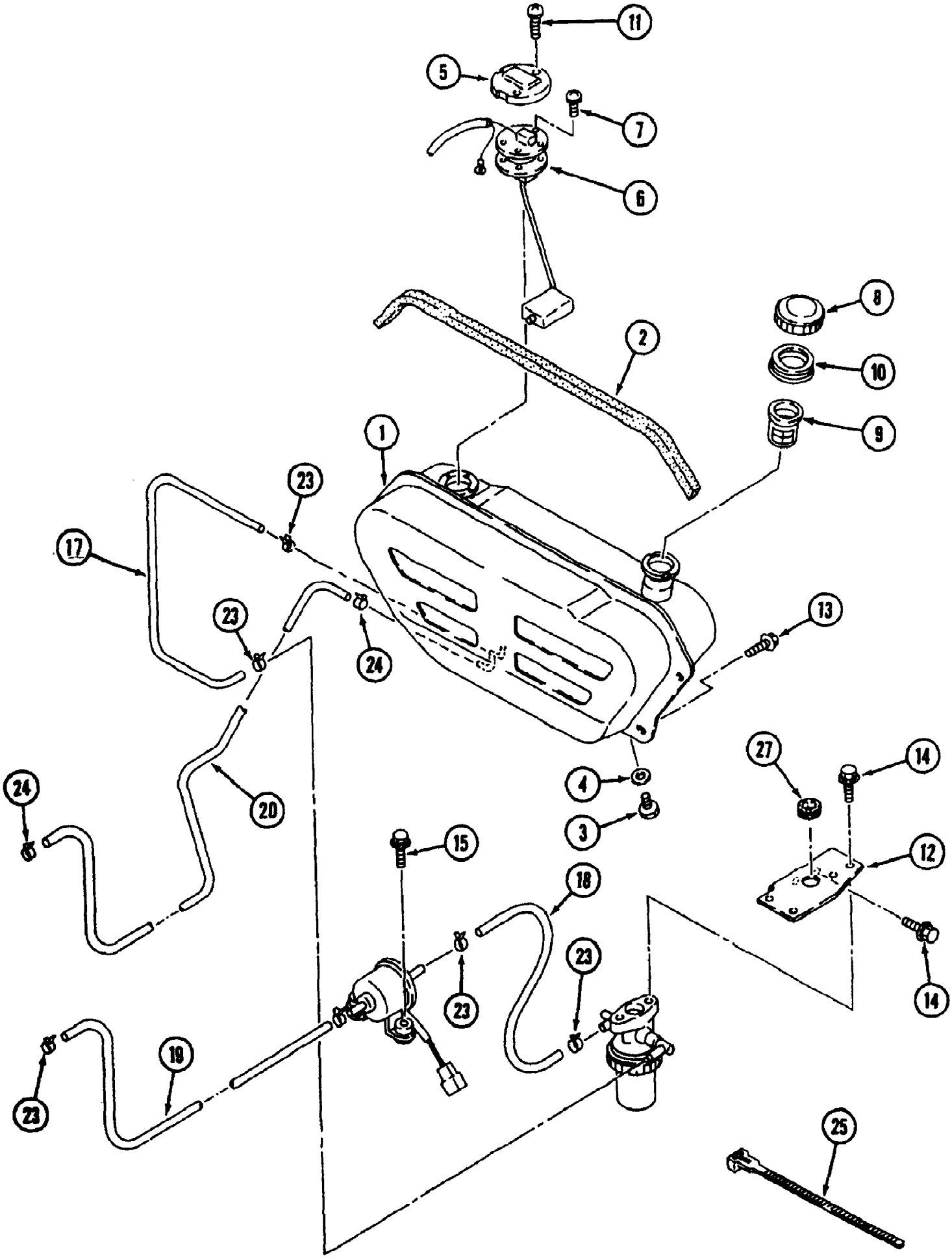

www.mymowerparts.com

For Discount Cub Cadet Parts Call 606-678-9623 or 606-561-4983

Ref #	Part Number	Qty	S/P/F	Description
	MA-19640101BD0	1		Tank, Ass'y. Includes Items 1 - 11
1	MA-19640103BD0	1	/P	Tank, Fuel
2	MA-19640105000	1		Trim
3	MA-27403214200	1		Plug
4	MA-08331000800	1		Washer, Seal
5	MA-19630107BD0	1		Cover, Fuel Unit
6	MA-10210113000	1		Fuel, Unit
7	MA-H2420104012	3		Screw
8	MA-09805000004	1		Cap
9	MA-09806000002	1		Filter
10	MA-09806100001	1		Packing
11	MA-H2420104016	2		Screw
12	MA-19630112BD0	1		Bracket, Filter
13	MA-H1540108025	4		Bolt
14	MA-H1550110020	3		Bolt
15	MA-H1640106025	2		Bolt
17	MA-09810060400	1		Hose
18	MA-09810060300	1		Hose
19	MA-09810061850	1		Hose
20	MA-09810042150	1		Hose
23	MA-00504112005	6		Clamp, Hose
24	MA-00504110005	2		Clamp, Hose
25	MA-00511032070	5		Wire,Band
27	MA-00401003000	1		Grommet

www.mymowerparts.com

For Discount Cub Cadet Parts Call 606-678-9623 or 606-561-4983

Fuel Supply Parts 30 HP Eng (7300 SN 21932-Lower/7305 SN 23069-Lower)

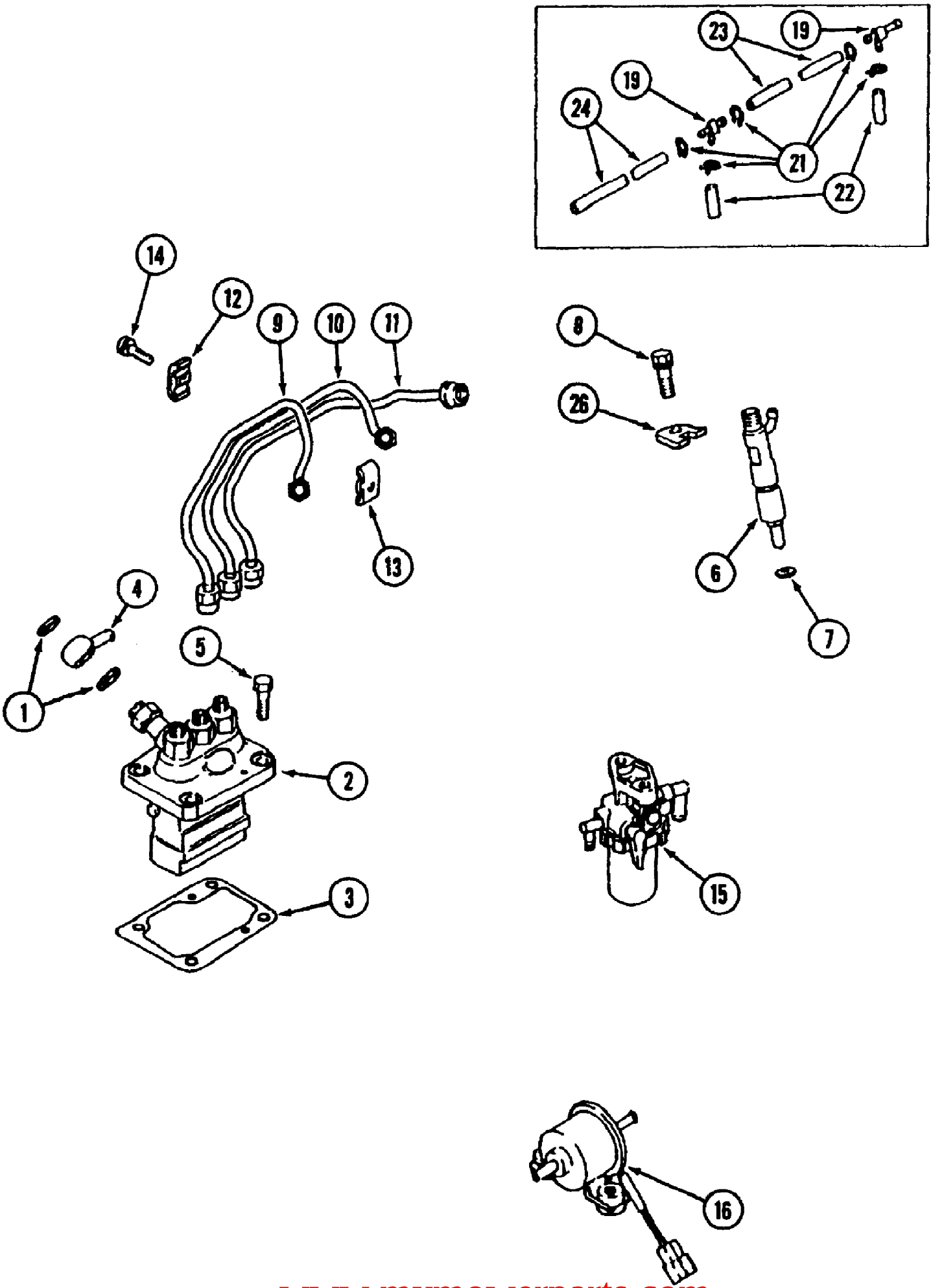

www.mymowerparts.com

For Discount Cub Cadet Parts Call 606-678-9623 or 606-561-4983

Fuel Supply Parts 30 HP Eng (7300 SN 21932-Lower/7305 SN 23069-Lower)

Ref #	Part Number	Qty	S/P/F	Description
1	MA-MK66114000	2		Washer, Seal
2	MA-30H65-02100	1		Pump Ass'y., Fuel Injection
3	MA-MM409040	AR		Shim Set, Adjusting T=0.2
	MA-MM409041	AR		Shim T=0.3
	MA-MM409042	AR		Shim T=0.4
	MA-MM409043	AR		Shim T=0.5
	MA-MM409044	AR		Shim T=0.6
	MA-MM409045	AR		Shim T=0.7
	MA-MM409046	AR		Shim T=0.8
	MA-MM409047	AR		Shim T=0.9
	MA-MM409048	AR		Shim T=1.0
4	MA-MM409126	1		Collar, Union
5	MA-MF100055	4	S	Bolt
6	MA-30A61-00500	3		Nozzle & Holder Ass'y.
7	MA-MM432045	3		Gasket, Nozzle Holder
8	MA-MF241257	3		Bolt
9	MA-30H61-00300	1	S	Pipe Ass'y., Fuel Injection No.1
10	MA-30H61-00400	1	S	Pipe Ass'y., Fuel Injection No.2
11	MA-30H61-00500	1	S	Pipe Ass'y., Fuel Injection No.3
12	MA-MM430703	2		Clamp (A)
13	MA-MM430614	2		Clamp (B)
14	MA-MF243628	2		Bolt, W/Washer
15	MA-30A62-00100	1	/P	Filter Ass'y., Fuel
16	MA-MM436739	1	S	Pump Ass'y., Electric,Fuel
	MA-30H61-00801	1		Pipe Ass'y., Fuel Return Includes Items 19 - 24
19	MA-MM100088	2		Joint
21	MA-MM100089	5		Clamp, Hose
22	MA-MM413132	2		Pipe, Rubber
23	MA-MM413105	1		Pipe, Rubber
24	MA-MM413108	1		Pipe, Rubber
26	MA-MM43713701	1	S	Support Nozzle

www.mymowerparts.com

For Discount Cub Cadet Parts Call 606-678-9623 or 606-561-4983

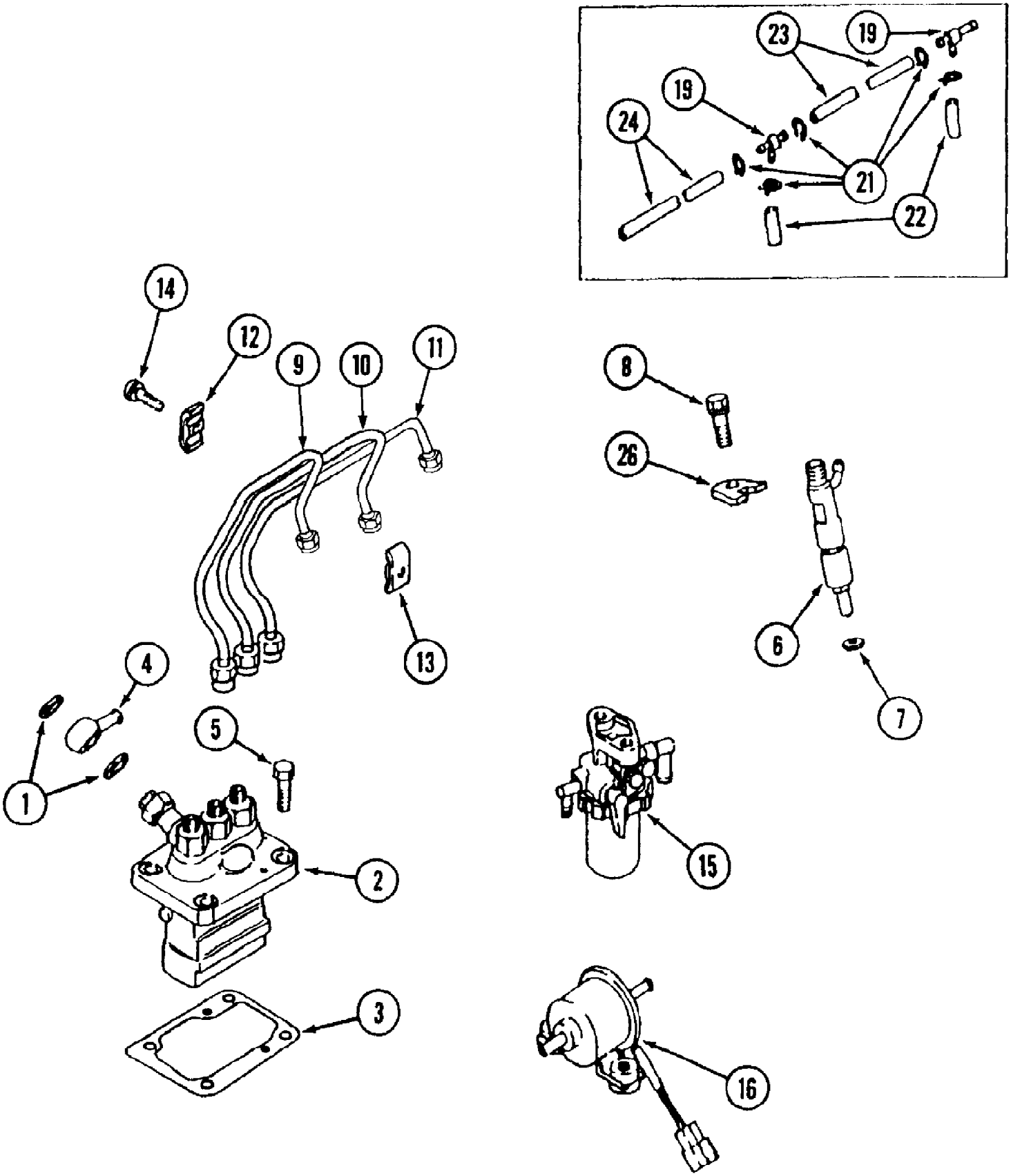

www.mymowerparts.com

For Discount Cub Cadet Parts Call 606-678-9623 or 606-561-4983

Fuel Supply Parts 30HP Engine 7300 S/N 21933 & Up

Ref #	Part Number	Qty	S/P/F	Description
1	MA-MK661-14000	2		Washer, Seal
2	MA-30H65-05200	1		Pump Ass'y., Fuel Injection
3	MA-MM409891	1		Shim Set, Adjusting
4	MA-31A65-00100	1		Collar, Union
5	MA-MF100055	3	S	Bolt
6	MA-MM438767	3		Nozzle & Holder Ass'y.
7	MA-MM432045	3		Gasket, Nozzle
8	MA-MF241257	3		Bolt
9	MA-30H61-00301	1	/P	Pipe Ass'y., Fuel Injection No. 1
10	MA-30H61-00401	1	/P	Pipe Ass'y., Fuel Injection No. 2
11	MA-30H61-00501	1	/P	Pipe Ass'y., Fuel Injection No. 3
12	MA-MM430703	2		Clamp (A)
13	MA-MM430614	2		Clamp (B)
14	MA-MF243628	2		Bolt, w/Washer
15	MA-30A6200100	1		Filter Ass'y., Fuel
16	MA-MM436739	1	S	Pump Ass'y. Fuel
	MA-30H61-00801	1		Pipe Ass'y.. Fuel Return Includes items 19-24
19	MA-MM100088	2		Joint
21	MA-MM100089	5		Clamp, Hose
22	MA-MM413132	2		Pipe, Rubber
23	MA-MM413105	1		Pipe, Rubber
24	MA-MM413108	1		Pipe, Rubber
26	MA-MM43713701	3	S	Support, Nozzle

www.mymowerparts.com

For Discount Cub Cadet Parts Call 606-678-9623 or 606-561-4983

Governor Parts 30HP Engine (7300 S/N 21932-Lower/7305 S/N 23069-Lower)

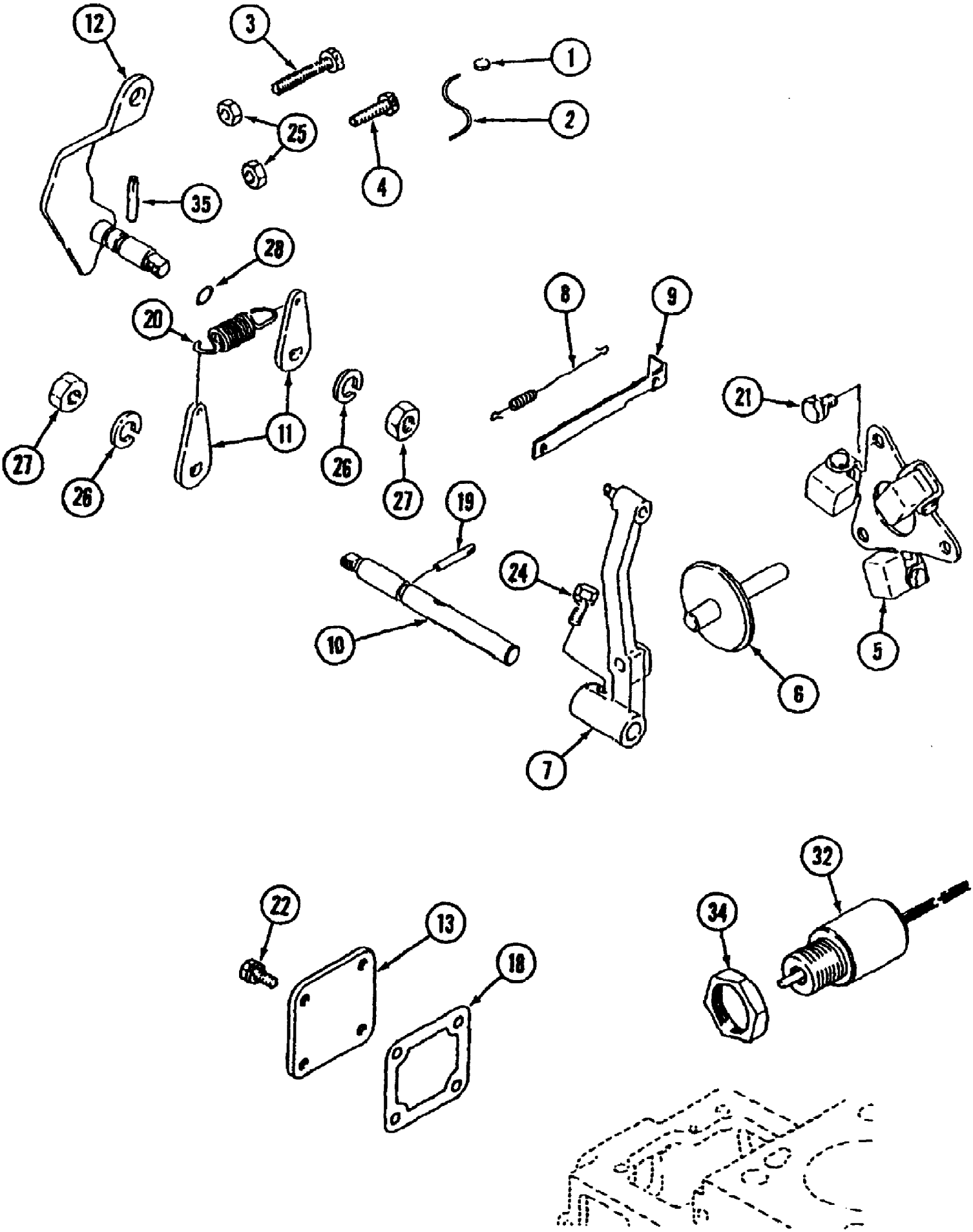

www.mymowerparts.com

For Discount Cub Cadet Parts Call 606-678-9623 or 606-561-4983

Governor Parts 30HP Engine (7300 S/N 21932-Lower/7305 S/N 23069-Lower)

Ref #	Part Number	Qty	S/P/F	Description
1	MA-MK99200001	1		Metal, Sealing
2	MA-MK99300140	1	S	Wire
3	MA-MM401080	1		Bolt, High Idle Set
4	MA-MM401082	1		Bolt, Idle Set
5	MA-MM407006	1		Weight Ass'y., Governor
6	MA-30A63-02200	1		Shaft Ass'y., Sliding
7	MA-MM407028	1		Lever Ass'y., Governor
8	MA-MM435575	1		Spring, Tie Rod
9	MA-MM409181	1		Rod, Tie
10	MA-MM407031	1		Shaft, Governor
11	MA-MM40703502	2	/P	Lever, Governor Spring
12	MA-MM432379	1		Lever, Speed Control
13	MA-MM409150	1		Cover Ass'y., Tie Rod
18	MA-MM40915101	1	S	Gasket, Cover
19	MA-K8712630	1		Pin, Grooved
20	MA-MM409186	1		Spring, Governor
21	MA-MF241222	3		Bolt, W/Washer
22	MA-MF241224	4		Bolt, W/Washer
24	MA-MF244823	1	S	Bolt, W/Washer
25	MA-MF430004	2		Nut
26	MA-MF450405	2		Washer, Spring
27	MA-MF430725	2		Nut, Jam
28	MA-MF520002	1		O-Ring
32	MA-30A87-00090	1	S/F	Solenoid & Nut Set Includes item 34; Replaces MA-30A87-10400
34	MA-MM409671	1		Nut
35	MA-MM409239	1		Pin, Grooved

www.mymowerparts.com

For Discount Cub Cadet Parts Call 606-678-9623 or 606-561-4983

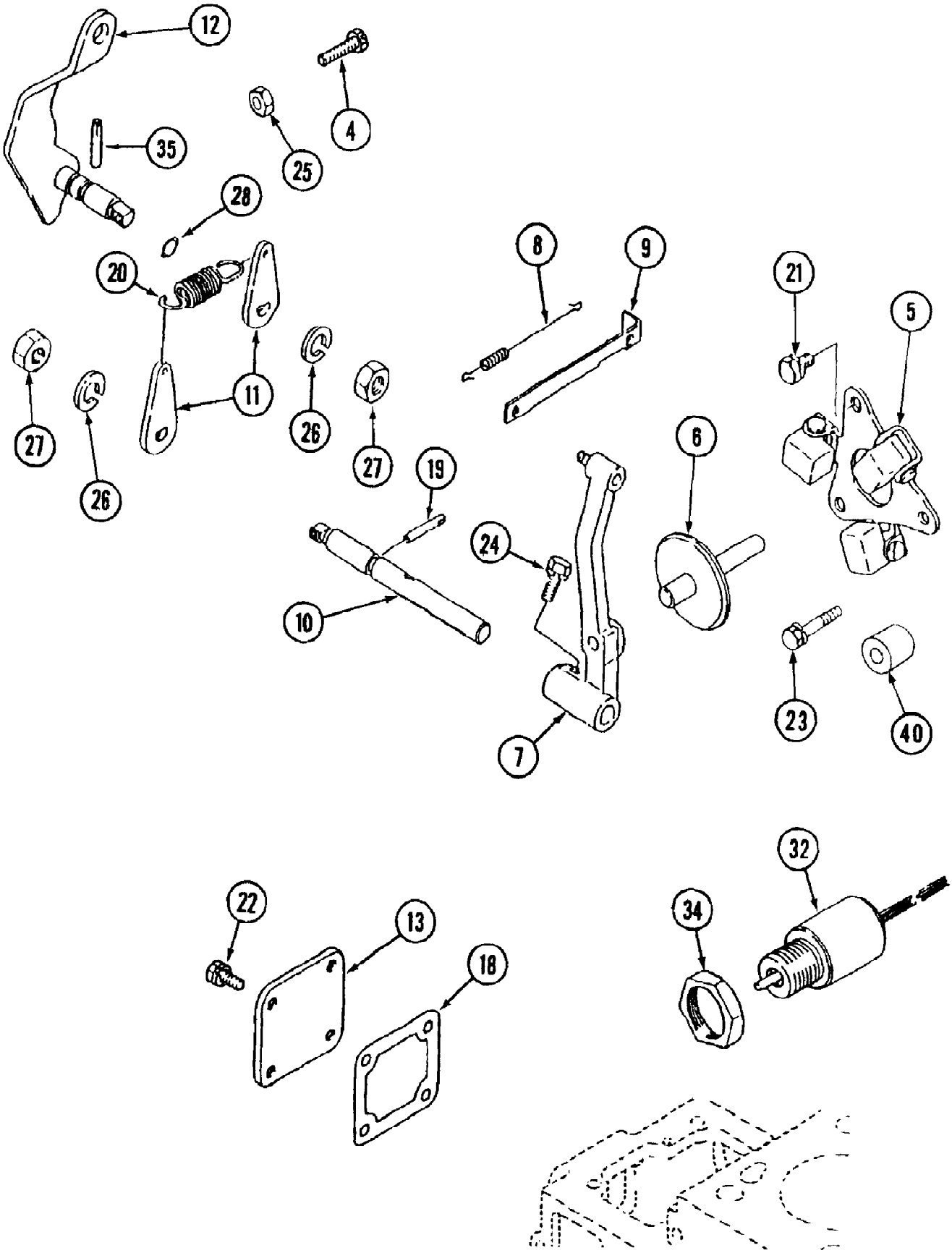

www.mymowerparts.com

For Discount Cub Cadet Parts Call 606-678-9623 or 606-561-4983

Ref #	Part Number	Qty	S/P/F	Description
4	MA-MM401082	1		Bolt, Idle Set
5	MA-30H63-00011	1		Weight Ass'y., Governor
6	MA-30H63-04200	1		Shaft Ass'y., Sliding
7	MA-30H63-04100	1		Lever Ass'y., Governor
8	MA-MM435575	1		Spring, Tie Rod
9	MA-30A63-02600	1		Rod, Tie
10	MA-MM407031	1		Shaft, Governor
11	MA-MM40703502	2	/P	Lever, Governor Spring
12	MA-MM432379	1		Lever, Speed Control
13	MA-MM409150	1		Cover Ass'y., Tie Rod
18	MA-30A63-00101	1		Gasket, Cover
19	MA-K8712630	1		Pin, Grooved
20	MA-30H63-08100	1		Spring, Governor
21	MA-MF241222	2		Bolt, w/Washer
22	MA-MF241224	4		Bolt, w/Washer
23	MA-MF241229	1		Bolt, w/Washer
24	MA-MF244823	1	S	Bolt, w/Washer
25	MA-MF430004	1		Nut
26	MA-MF450405	2		Washer, Spring
27	MA-MF430725	2		Nut, Jam
28	MA-MF520002	1		O-Ring
32	MA-30A87-00090	1	S	Solenoid & Nut Set Includes item 34
34	MA-MM409671	1		Nut
35	MA-MM409239	1		Pin, Grooved
40	MA-MM403988	1		Stopper

www.mymowerparts.com

For Discount Cub Cadet Parts Call 606-678-9623 or 606-561-4983

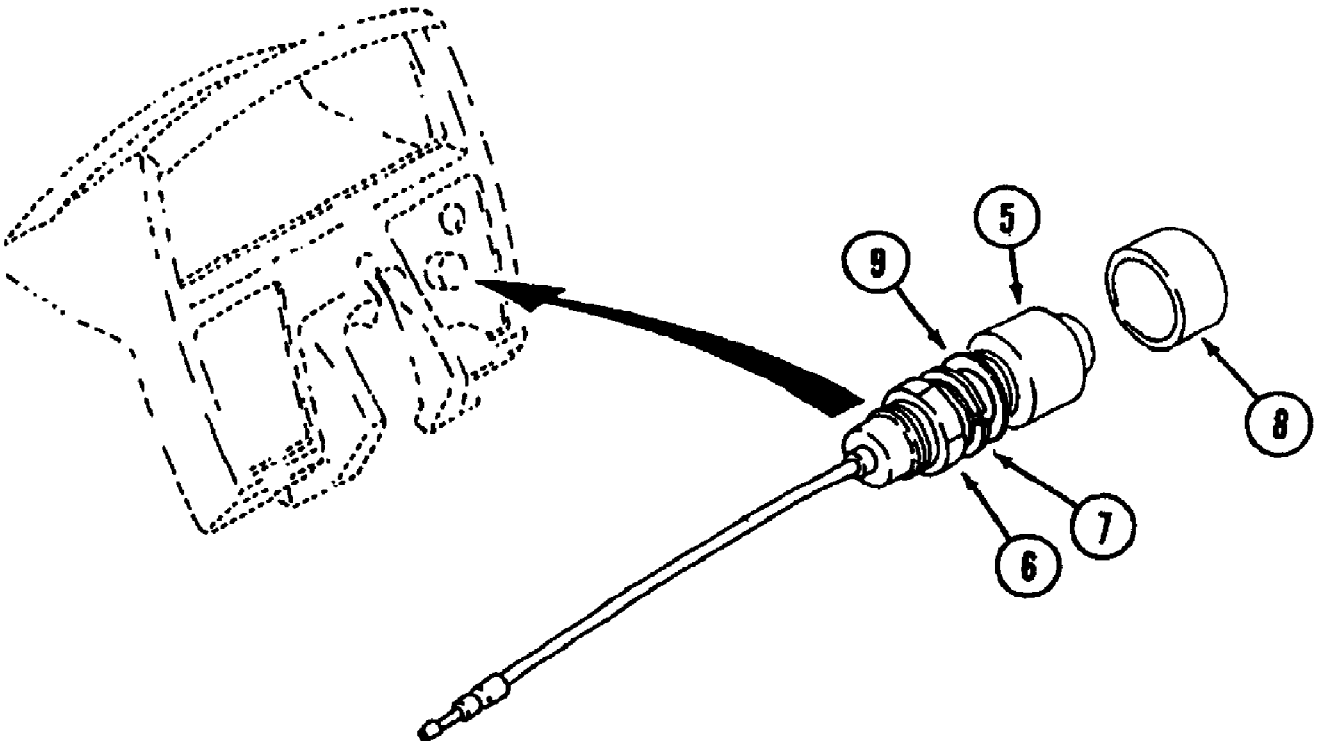

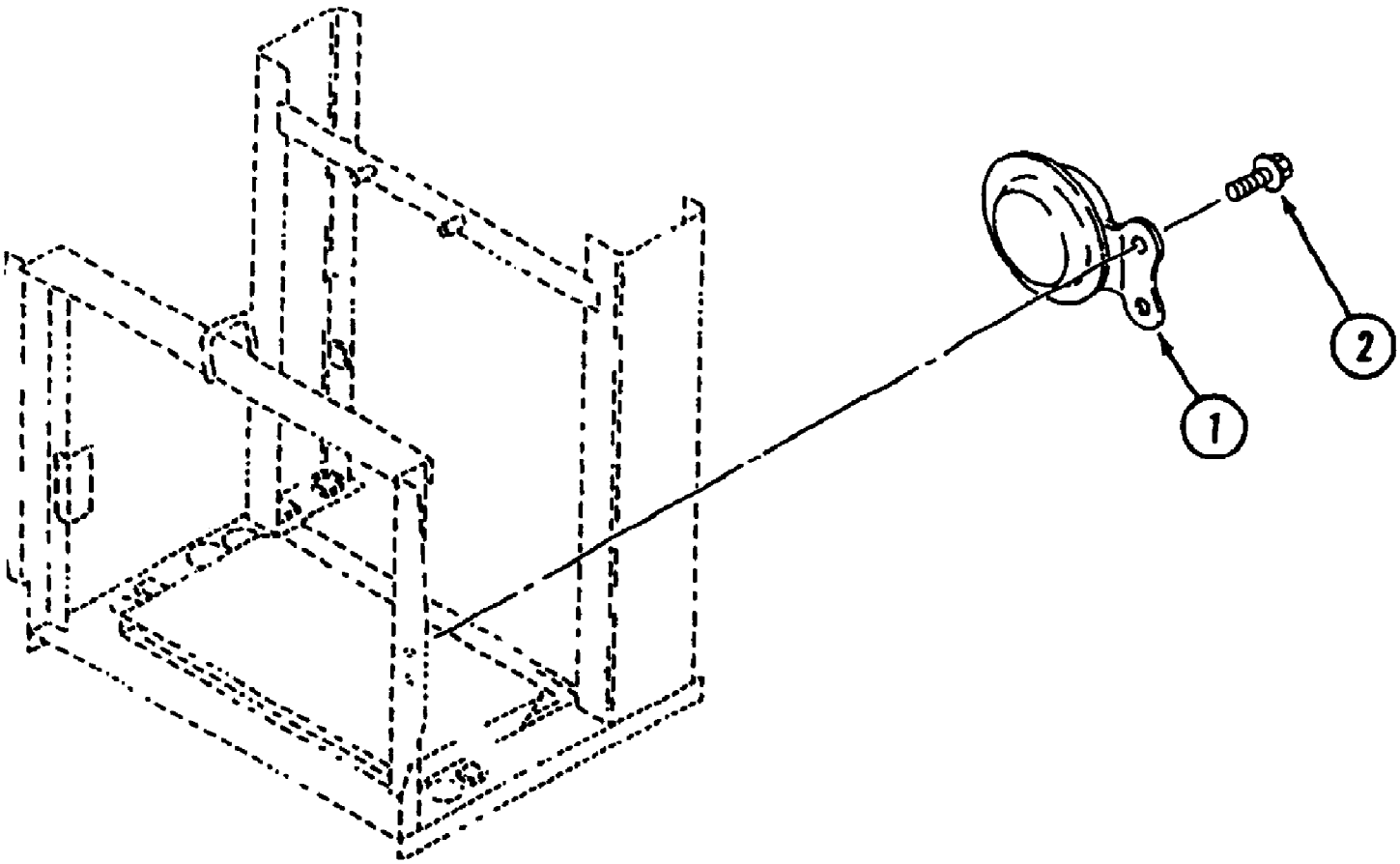

www.mymowerparts.com

For Discount Cub Cadet Parts Call 606-678-9623 or 606-561-4983

Ref #	Part Number	Qty	S/P/F	Description
		1		Horn Kit (NSS)
1	MA-67404-02100	1		Horn
2	MA-H1440106016	2	/P	Bolt
	MA-12187771000	1		Horn Switch Ass'y. Includes Items 5 - 9
5	MA-19842949110	1		Switch Ass'y.
6	MA-19842962120	1		Nut
7	MA-A3600100802	1		Washer
8	MA-12187772000	1		Boot
9	MA-12187773000	1		Packing

www.mymowerparts.com

For Discount Cub Cadet Parts Call 606-678-9623 or 606-561-4983

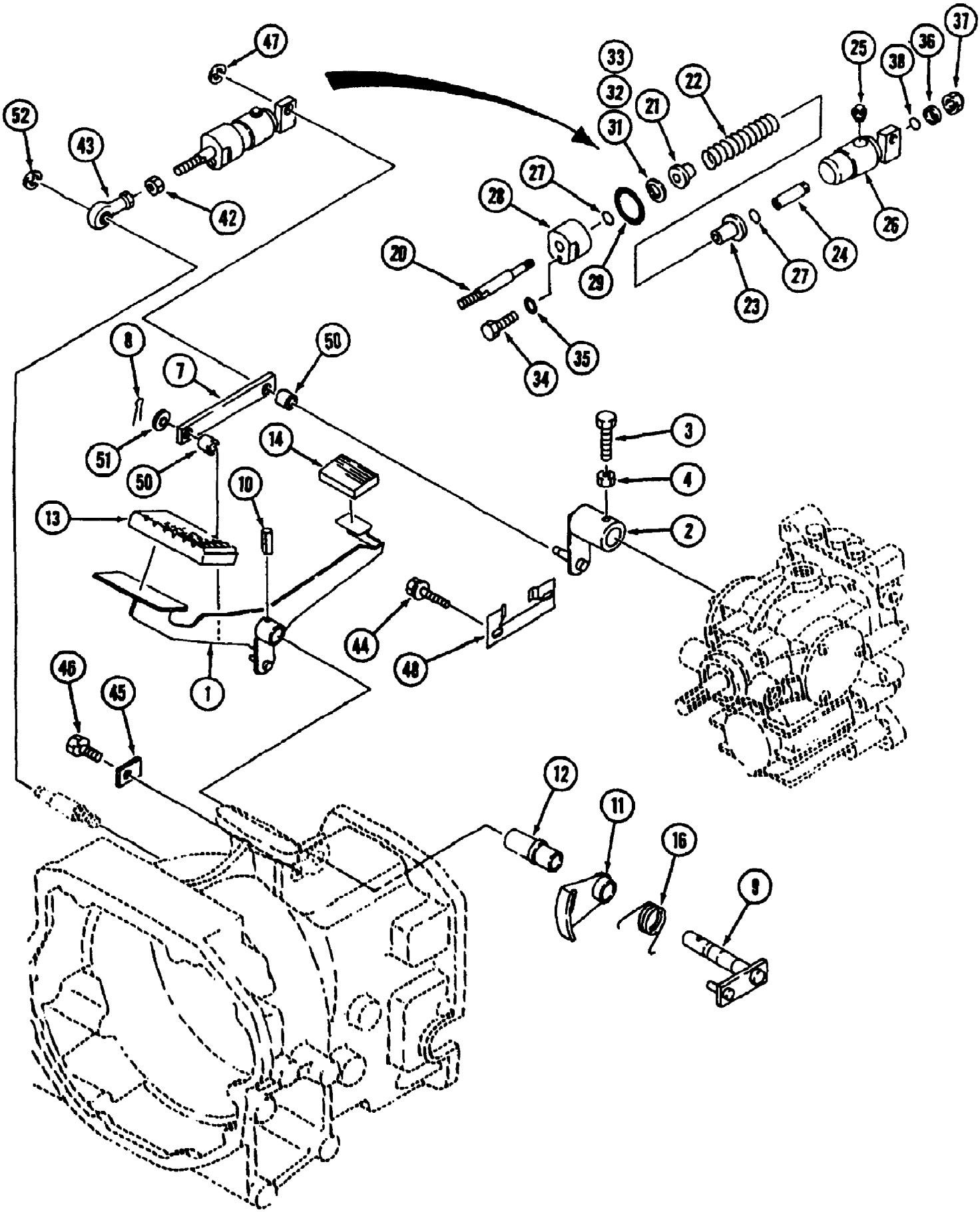

www.mymowerparts.com

For Discount Cub Cadet Parts Call 606-678-9623 or 606-561-4983

Ref #	Part Number	Qty	S/P/F	Description
1	MA-19642301AG0	1		Pedal, HST
2	MA-19642303AG0	1		Arm
3	MA-19632304000	1		Bolt Set
4	MA-A3030110003	1	/P	Nut
7	MA-19642308000	1		Plate
8	MA-05200130020	1		Pin, Split
9	MA-19632311000	1		Shaft, Pedal
10	MA-05500006032	1		Pin, Spring
11	MA-19632313000	1		Arm, Lock
12	MA-19632312000	1		Shaft
13	MA-11931812000	1		Cover, Pedal
14	MA-10320228000	1		Cover, Pedal
16	MA-19632317000	1		Spring
	MA-19632321001	1	/P	Return Spring Ass'y. Includes Items 20 - 38
20	MA-19632361000	1		Shaft A
21	MA-19632366000	1		Guide A
22	MA-19871263000	1		Spring
23	MA-19632365000	1		Guide B
24	MA-19632362000	1		Shaft B
25	MA-A6010101000	1	/P	Plug
26	MA-19632363000	1		Cap A
27	MA-08300100120	2	S	O-Ring
28	MA-19632364000	1		Cap B
29	MA-08300100260	1		O-Ring
	MA-19632368000	1		Liner Set Includes Items 31 - 33
31	MA-07310001201	AR		Liner t=0.15
32	MA-07310001203	AR		Liner t=0.3
33	MA-07310001205	AR		Liner t=0.5
34	MA-A2000105008	1		Bolt
35	MA-08330000500	1		Seal, Washer
36	MA-19632367000	1		Collar
37	MA-A3500106000	1		Nut
38	MA-08300100060	1		O-Ring
42	MA-A3010108002	1		Nut
43	MA-10302436000	1		Link, Ball R
44	MA-H1550110020	2		Bolt
45	MA-19631724000	1		Plate
46	MA-F1550110020	1		Bolt
47	MA-07420100800	1		Ring
48	MA-19642332000	1		Plate
50	MA-19632309000	2		Bushing
51	MA-08331001000	1	/P	Washer
52	MA-07420100600	1		Ring

www.mymowerparts.com

For Discount Cub Cadet Parts Call 606-678-9623 or 606-561-4983

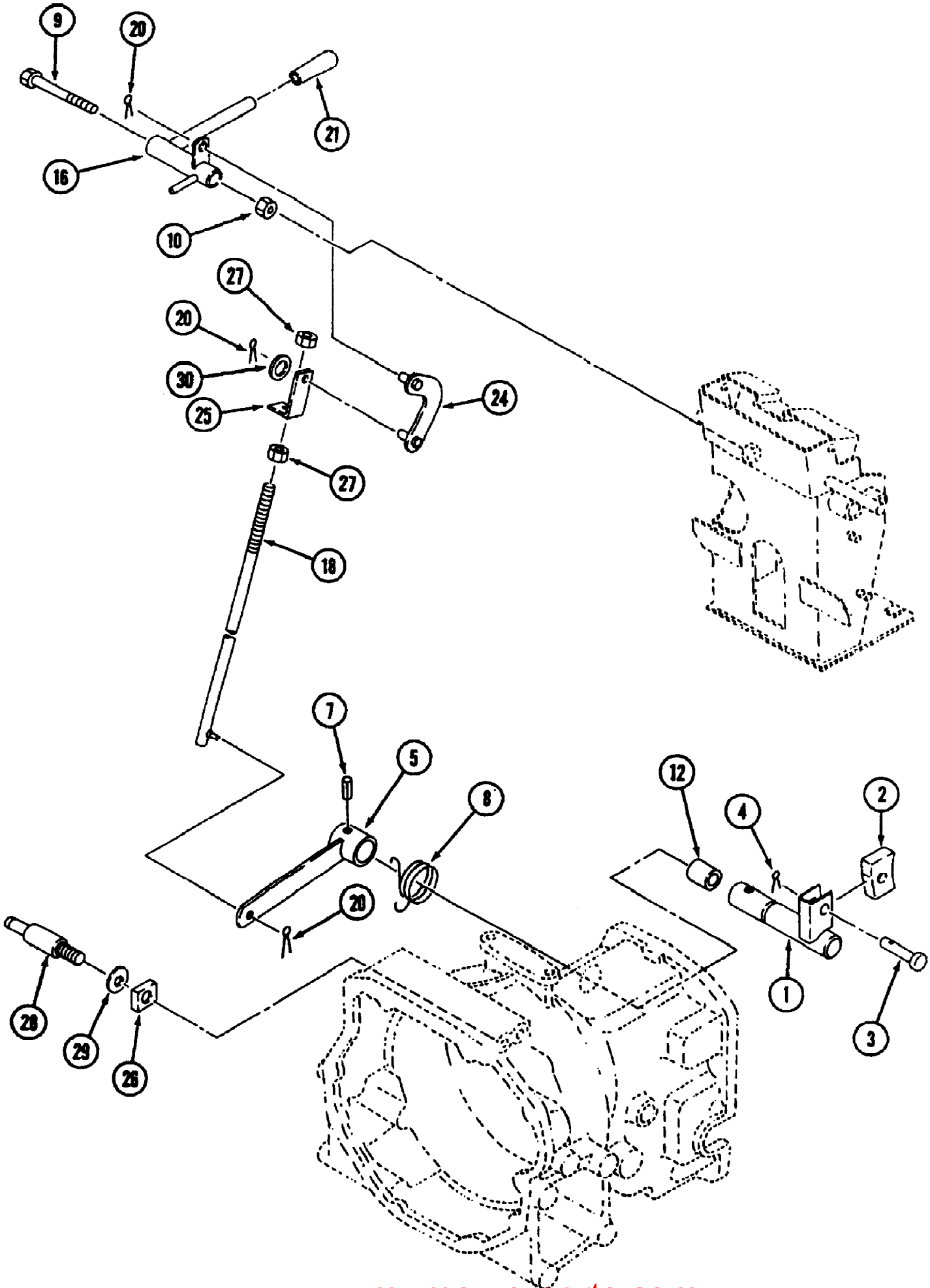

www.mymowerparts.com

For Discount Cub Cadet Parts Call 606-678-9623 or 606-561-4983

Ref #	Part Number	Qty	S/P/F	Description
1	MA-19632334000	1		Arm, Brake
2	MA-19632336000	1		Shoe
3	MA-05620108025	1		Pin, Clevis
4	MA-05200125016	1	S	Pin, Split
5	MA-19632338AG0	1		Arm
7	MA-05500006032	1		Pin, Spring
8	MA-19642339000	1		Spring
9	MA-A5150112095	1		Bolt
10	MA-A3030112003	1		Nut
12	MA-07972020200	1		Bushing
16	MA-19632347AG1	1		Lever, Craise
18	MA-19642352000	1		Rod
20	MA-05200125016	3	S	Pin, Split
21	MA-14212284000	1		Grip
24	MA-19632348001	1		Plate
25	MA-19632354000	1		Plate
26	MA-19631724000	1		Plate
27	MA-A3000106002	2		Nut
28	MA-19642333001	1		Bolt Set
29	MA-A3600101002	1	/P	Washer
30	MA-03500130613	AR		Washer

www.mymowerparts.com

For Discount Cub Cadet Parts Call 606-678-9623 or 606-561-4983

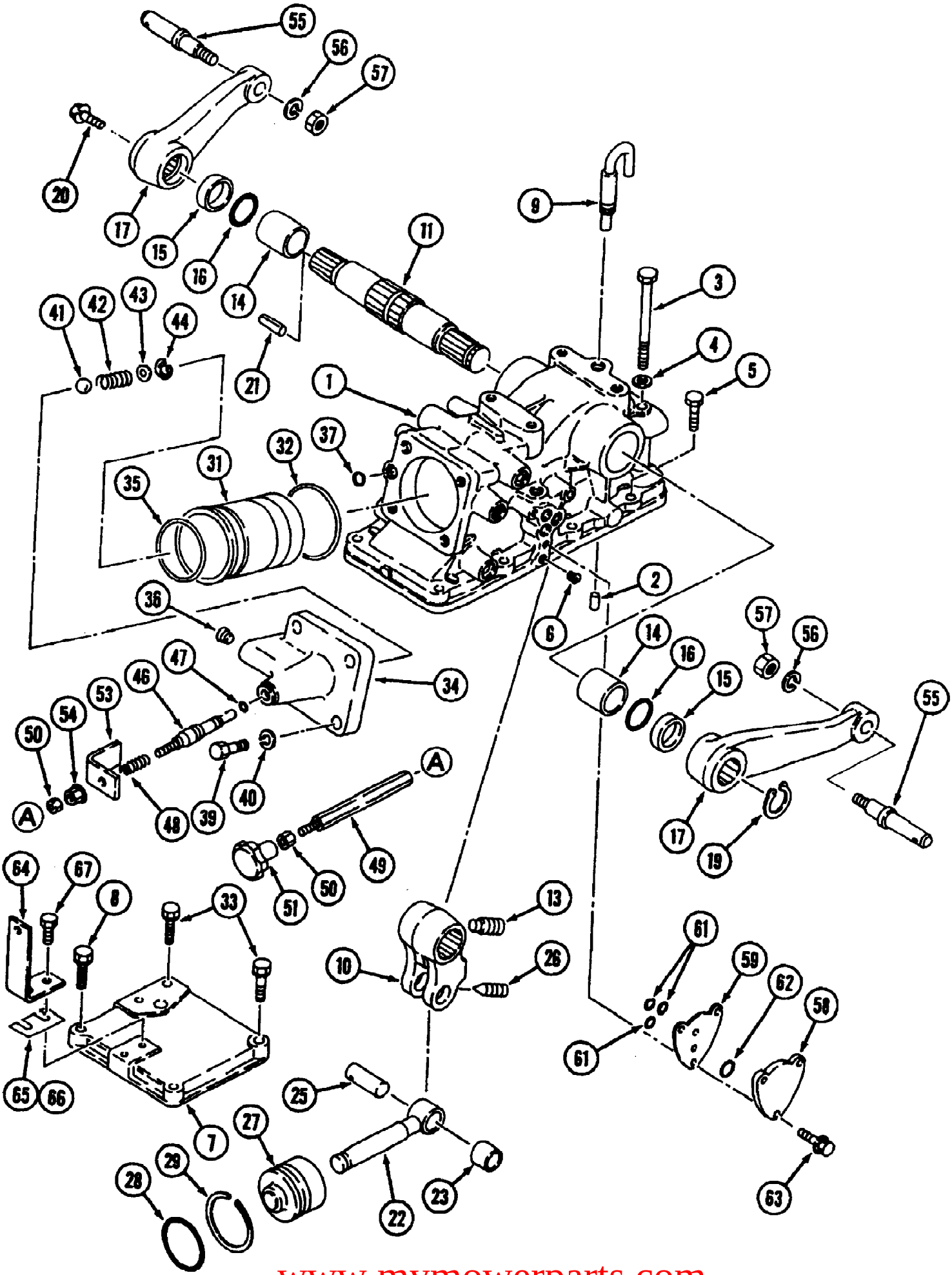

www.mymowerparts.com

For Discount Cub Cadet Parts Call 606-678-9623 or 606-561-4983

Ref #	Part Number	Qty	S/P/F	Description
1	MA-19642401AG0	1		Case, Hydraulic
2	MA-05401010020	2		Pin, Dowel
3	MA-A0550110130	2		Bolt
4	MA-A3600101002	2	/P	Washer
5	MA-F1550110045	6		Bolt
6	MA-A6010A01300	4		Plug
7	MA-19642404AG1	1		Cover
8	MA-F1550110040	1		Bolt
9	MA-11762466AG2	1		Pipe, Vent
10	MA-19642407000	1		Arm, Power
11	MA-19642409000	1		Shaft, Hydraulic
13	MA-HA130302000	1		Screw
14	MA-07972045300	2		Bushing
15	MA-11742458000	2		Collar
16	MA-08300200450	2		O-Ring
17	MA-19642413AG1	2		Arm, Lift
19	MA-07400004200	1		Ring
20	MA-F1550110025	1		Bolt
21	MA-05500004016	1		Pin, Spring
22	MA-19642416000	1		Rod, Piston
23	MA-07972022200	1		Bushing
25	MA-19632418000	1		Pin
26	MA-HA130401000	1		Screw
27	MA-19642417000	1		Piston
28	MA-08300100700	1		O-Ring
29	MA-08320100700	1		Ring, Back Up
31	MA-19642419000	1		Cylinder, Hydraulic
32	MA-08300500900	1		O-Ring
33	MA-F1550110050	2		Bolt
34	MA-19642421AG0	1		Head, Cylinder
35	MA-08300200750	1	/P	O-Ring
36	MA-A6010101300	1		Plug
37	MA-08301100120	1	/P	O-Ring
39	MA-A9450114050	4		Bolt
40	MA-A3600101402	4		Washer
41	MA-08000001100	1		Ball
42	MA-11501707000	1		Spring
43	MA-19822413000	1		Washer
44	MA-07410001500	1		Ring
46	MA-19082411000	1		Screw, Pilot
47	MA-08301100060	1		O-Ring
48	MA-10252447000	1		Spring
49	MA-19632424000	1		Shaft
50	MA-A3010108002	2		Nut
51	MA-19062432000	1		Knob
53	MA-19632423AG0	1		Lever, Stopper
54	MA-F3010108001	1		Nut
55	MA-10382406000	2		Pin, Lift Arm
56	MA-A3600101602	2		Washer
57	MA-A3030116002	2		Nut
58	MA-10072448AG0	1		Cap
59	MA-10072449000	1		Plate
61	MA-08301100120	3	/P	O-Ring

www.mymowerparts.com

For Discount Cub Cadet Parts Call 606-678-9623 or 606-561-4983

Ref #	Part Number	Qty	S/P/F	Description
62	MA-08301100250	1		O-Ring
63	MA-F1540108035	3		Bolt
64	MA-19642426000	1		Bracket
65	MA-36004159010	AR		Shim
66	MA-10312415000	AR		Shim
67	MA-F1540108016	2		Bolt

www.mymowerparts.com

For Discount Cub Cadet Parts Call 606-678-9623 or 606-561-4983

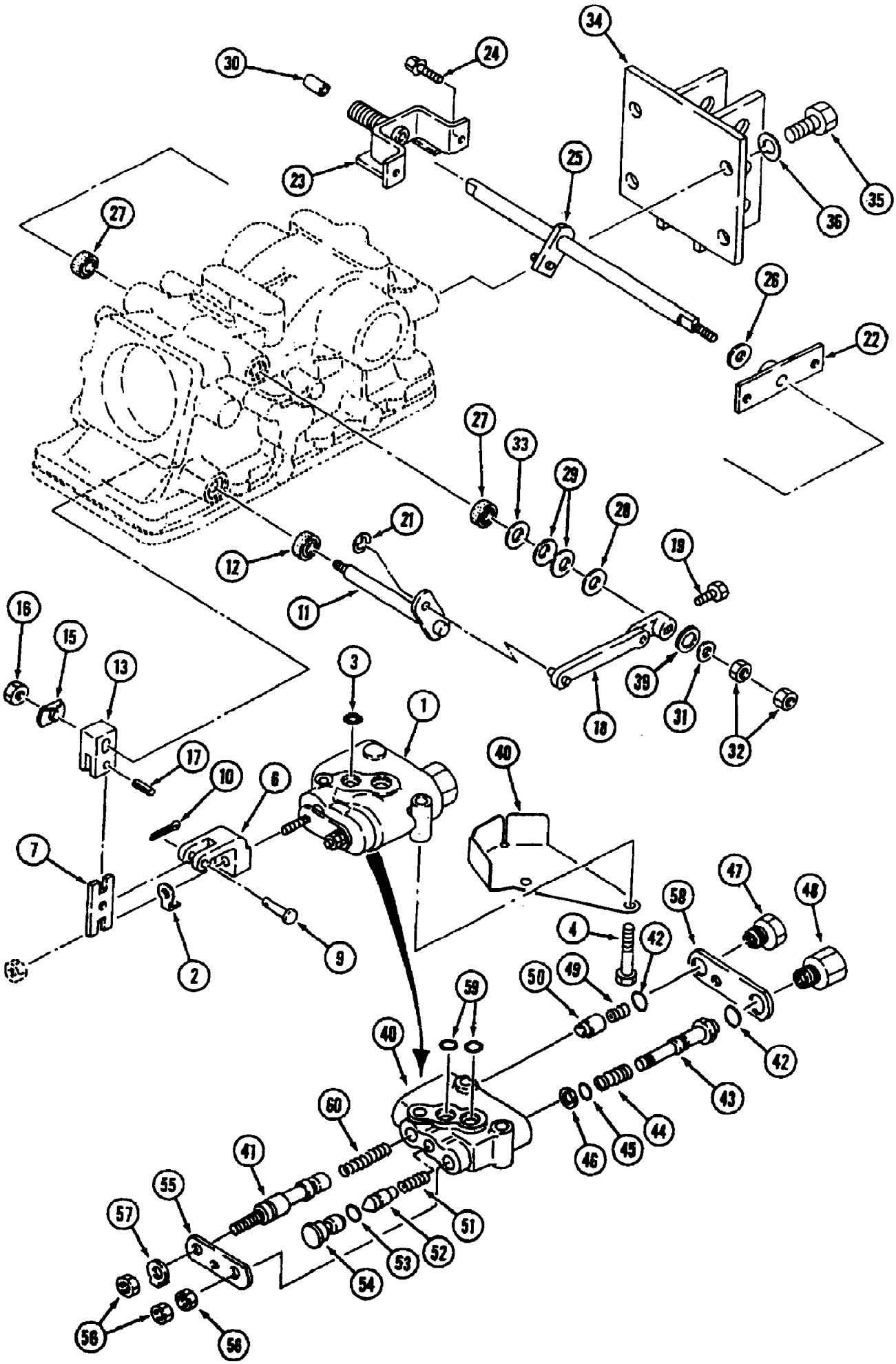

www.mymowerparts.com

For Discount Cub Cadet Parts Call 606-678-9623 or 606-561-4983

Ref #	Part Number	Qty	S/P/F	Description
1	MA-69473-40700	1	/P	Valve, Control Includes Items 2 - 3
2	MA-11802471130	1		Plate, Stopper
3	MA-08301100120	2	/P	O-Ring
4	MA-F1540108050	2		Bolt
6	MA-10212425001	1		Fork
7	MA-10032419001	1		Link, Valve
9	MA-05620006030	1		Pin, Clevis
10	MA-05200125016	1	S	Pin, Split
11	MA-10212424AG0	1		Shaft, Lever
12	MA-08401012227	1		Oil Seal
13	MA-10032415000	1		Shifter, Valve
15	MA-11352426000	1		Plate
16	MA-A3010108002	1		Nut
17	MA-05500008016	1		Pin, Spring
18	MA-19642453AG0	1		Lever Ass'y.
19	MA-A0400106012	1		Bolt
21	MA-07420100600	1		Ring
22	MA-19642456000	1		Plate
23	MA-19642457000	1		Bracket
24	MA-F1540108020	2		Bolt
25	MA-19642458AG0	1		Shaft
26	MA-19041264000	1		Lining, Brake
27	MA-08401012227	2		Seal, Oil
28	MA-31212559000	1	S	Liner
29	MA-36105725100	2		Spring
30	MA-07961012120	1		Bushing
31	MA-03500140818	1		Washer
32	MA-A3010108002	2		Nut
33	MA-19063258000	1		Washer
34	MA-10213026AG0	1	/P	Bracket, Top Link
35	MA-A0400114030	4		Bolt
36	MA-A3600101402	4		Washer
39	MA-03500140818	AR		Washer
40	MA-69473-40711	1	S	Body Ass'y. Includes Item 41
41		1		Spool
42	MA-08300100150	2		O-Ring
43	MA-10032416140	1		Poppet
44	MA-11802471190	1		Spring
45	MA-08300100070	1		O-Ring
46	MA-11802471180	1		Ring, Back Up
47	MA-10032416150	1		Plug
48	MA-69473-40712	1		Plug, Seat
49	MA-11802471240	1	S	Spring
50	MA-10032416170	1		Valve, Unloader
51	MA-19952436120	1		Spring
52	MA-10032416180	1		Valve, Check
53	MA-08301100090	1		O-Ring
54	MA-10032416190	1		Seat
55	MA-69473-40713	1		Plate
56	MA-A3010108003	3		Nut
57	MA-11802471130	1		Plate, Stopper
58	MA-69473-10711	1		Plate
59	MA-08301100120	2	/P	O-Ring

www.mymowerparts.com

For Discount Cub Cadet Parts Call 606-678-9623 or 606-561-4983

Ref #	Part Number	Qty	S/P/F	Description
60	MA-69473-10712	1		Spring, Return

www.mymowerparts.com

For Discount Cub Cadet Parts Call 606-678-9623 or 606-561-4983

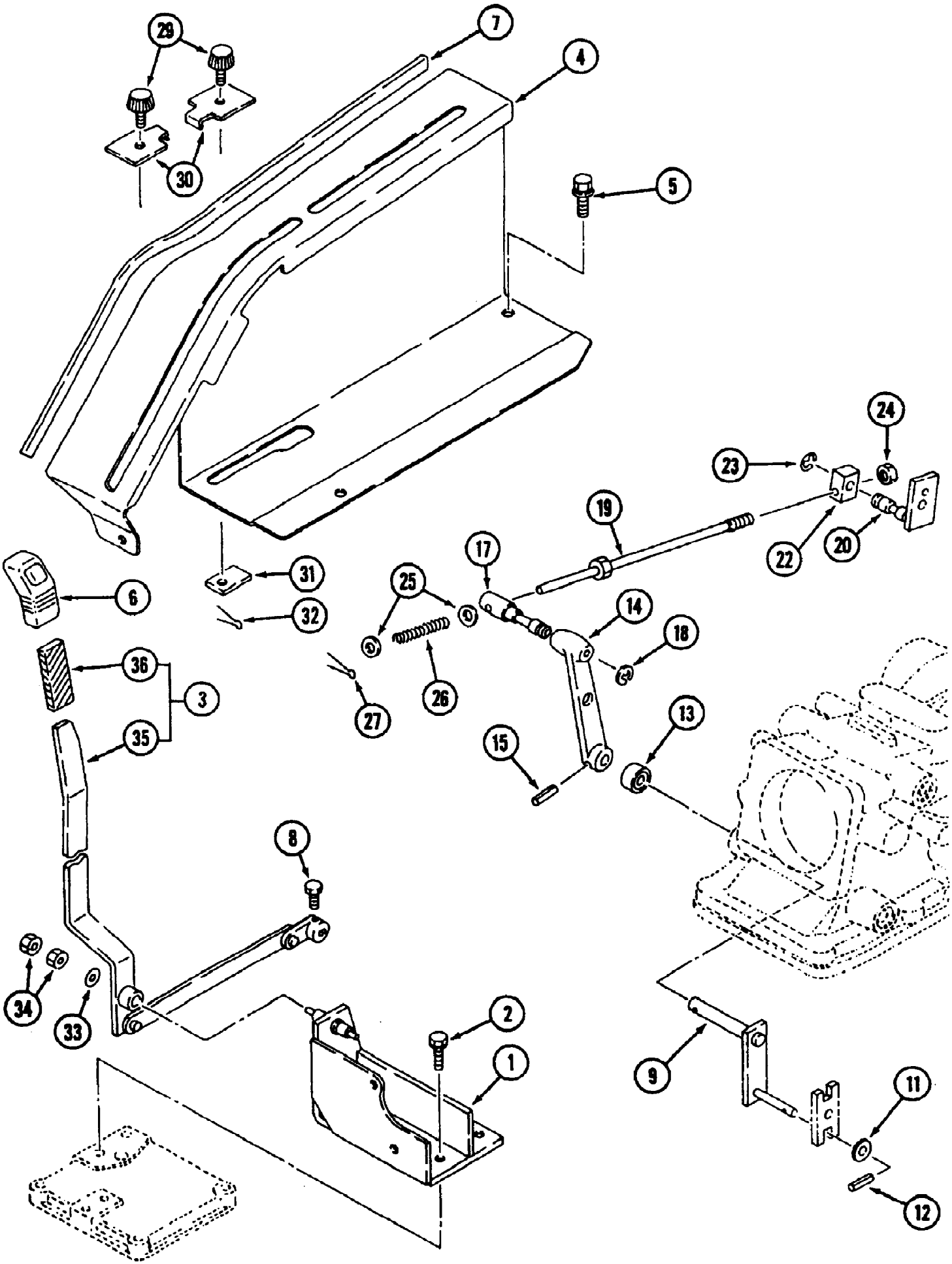

www.mymowerparts.com

For Discount Cub Cadet Parts Call 606-678-9623 or 606-561-4983

Ref #	Part Number	Qty	S/P/F	Description
1	MA-19642461AG0	1		Bracket
2	MA-F1550110050	1		Bolt
3	MA-19642462AG0	1	/P	Lever, P/C Ass'y.
4	MA-19642467BD0	1		Lever Guide R.H.
5	MA-H1540108020	4		Bolt
6	MA-10302444000	1		Grip
7	MA-19641752000	1		Cushion
8	MA-A0400106012	1		Bolt
9	MA-10212426000	1		Lever
11	MA-03500130815	1		Washer
12	MA-05500003020	1	/P	Pin, Spring
13	MA-08401012227	1		Oil Seal
14	MA-10032409AG0	1		Arm, Feedback
15	MA-05500005032	1		Pin, Spring
17	MA-19642464AG0	1		Pin, Joint
18	MA-07420100800	1		Ring
19	MA-10212433001	1		Rod
20	MA-19642465AG0	1		Plate
22	MA-10212423000	1		Joint
23	MA-07420100600	1		Ring
24	MA-A3010108002	1		Nut
25	MA-03500130815	2		Washer
26	MA-10212434000	1		Spring
27	MA-05200125016	1	S	Pin, Split
29	MA-10212438000	2		Grip
30	MA-10302445000	2		Stopper
31	MA-19642466000	2		Plate
32	MA-05200120016	2		Pin, Split
33	MA-03500150822	1		Washer
34	MA-A3010108002	2		Nut
35	MA-19642463AG0	1		Lever, P/C Ass'y.
36	MA-19632439000	1		Tube

www.mymowerparts.com

For Discount Cub Cadet Parts Call 606-678-9623 or 606-561-4983

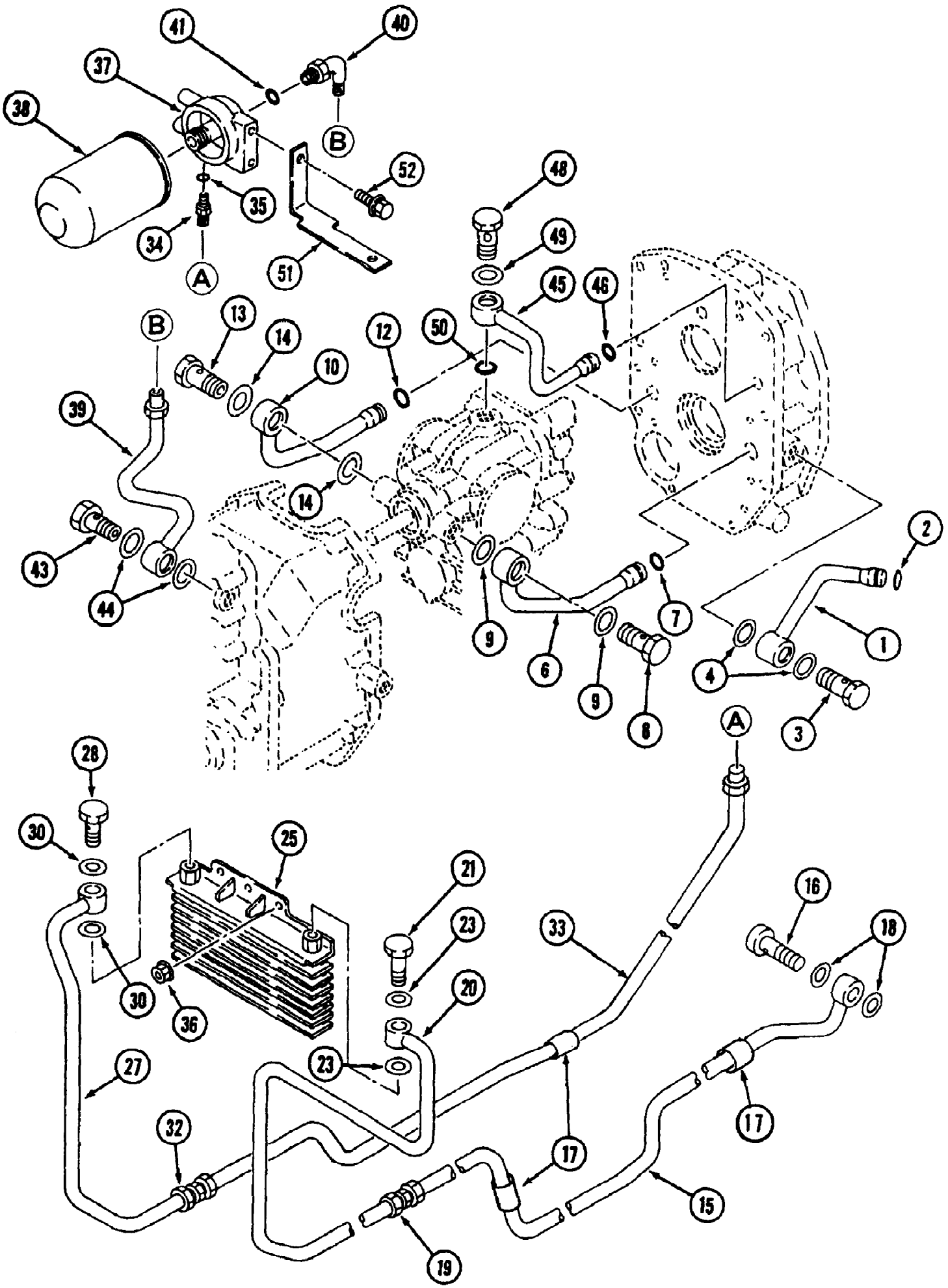

www.mymowerparts.com

For Discount Cub Cadet Parts Call 606-678-9623 or 606-561-4983

Ref #	Part Number	Qty	S/P/F	Description
1	MA-19642541AG0	1		Pipe L
2	MA-08301100160	1		O-Ring
3	MA-10302541000	1		Bolt, Eye
4	MA-08331002200	2		Seal, Washer
6	MA-19642542AG0	1		Pipe M
7	MA-08301100160	1		O-Ring
8	MA-10302541000	1		Bolt, Eye
9	MA-08331002200	2		Seal, Washer
10	MA-19642543AG0	1		Pipe N
12	MA-08301100140	1		O-Ring
13	MA-10302541000	1		Bolt, Eye
14	MA-08331002200	2		Seal, Washer
15	MA-19682507AG0	1		Pipe P Ass'y.
16	MA-10302534000	1		Bolt, Eye
17	MA-11352474000	3		Pipe
18	MA-08331001600	2		Seal, Washer
19	MA-06201115001	1		Body (Union)
20	MA-19682508AG0	1		Pipe Q Ass'y.
21	MA-10302534000	1		Bolt, Eye
23	MA-08331001601	2		Seal, Washer
25	MA-19642552000	1		Cooler,Oil
27	MA-19682505AG1	1		Pipe S Ass'y.
28	MA-10302534000	1		Bolt, Eye
30	MA-08331001601	2		Seal, Washer
32	MA-06201115001	1		Body (Union)
33	MA-19682506AG1	1		Pipe U Ass'y.
34	MA-06203115171	1		Body (Nipple)
35	MA-08301100140	1		O-Ring
36	MA-F3010108001	2		Nut
37	MA-19632559AG0	1	/P	Head Filter
38	MA-19632558000	1		Filter, Oil
39	MA-19642560AG0	1		Pipe V Ass'y.
40	MA-06205115171	1		Body (Elbow)
41	MA-08301100140	1		O-Ring
43	MA-10302534000	1		Bolt, Eye
44	MA-08331001600	2		Seal, Washer
45	MA-19642563AG0	1		Pipe W
46	MA-08301100140	1		O-Ring
48	MA-10302541000	1		Bolt, Eye
49	MA-08331002200	1		Seal, Washer
50	MA-08301100240	1		O-Ring
51	MA-19642564AG0	1		Bracket
52	MA-F1550110020	1		Bolt

www.mymowerparts.com

For Discount Cub Cadet Parts Call 606-678-9623 or 606-561-4983

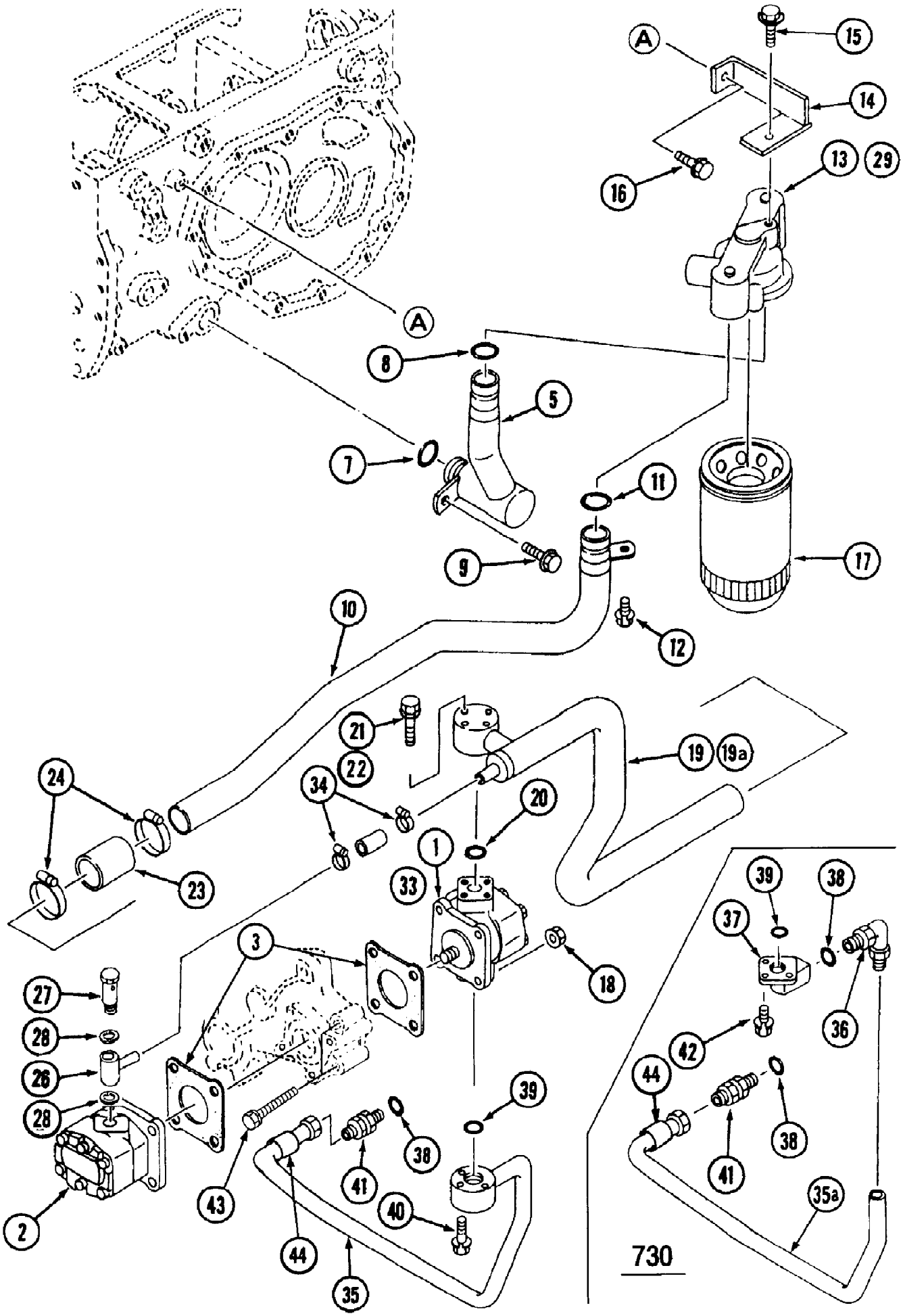

www.mymowerparts.com

For Discount Cub Cadet Parts Call 606-678-9623 or 606-561-4983

Ref #	Part Number	Qty	S/P/F	Description
1	MA-10302501002	1	/P	Pump
2	MA-10302539002	1	/P	Pump
3	MA-67700-20101	AR		Packing
5	MA-19682513AG0	1		Pipe A, Suction
7	MA-08300100320	1		O-Ring
8	MA-08300100240	1		O-Ring
9	MA-H1550110020	1		Bolt
10	MA-19642504AG0	1	/P	Pipe B, Suction
11	MA-08300100240	1		O-Ring
12	MA-F1540108016	1		Bolt
13		1		Base, Filter Not used on this product
14	MA-19642508AG0	1	/P	Bracket
15	MA-F1540108020	1		Bolt
16	MA-F1550110020	1		Bolt
17	MA-19642509000	1		Filter
18	MA-F3010108001	4		Nut
19		1		Pipe C, Suction Not used on this product
19A	MA-19682512AG0	1		Pipe D, Suction
20	MA-08300100200	1		O-Ring
21	MA-F1440106050	3		Bolt
22		1		Bolt Not used on this product
23	MA-11762527000	1		Hose
24	MA-HA230101000	2		Clip, Hose
26	MA-19672514AG0	1		Joint
27	MA-19672516000	1		Bolt Eye
28	MA-08331002200	2		Seal Washer
29	MA-19642506AG0	1		Base, Filter
33	MA-19672515000	1		Hose
34	MA-00501100280	2		Clamp, Hose
35		1		Pipe A, Press.Ass'y. Not used on this product
35A	MA-19682518AG0	1		Pipe B, Press.Ass'y.
36	MA-06205115171	1		Body (Elbow)
37	MA-19642522000	1		Joint
38	MA-08301100140	2		O-Ring
39	MA-08301100180	1		O-Ring
40		1		Bolt Not used on this product
41	MA-06203115171	1		Body (Nipple)
42	MA-F1440106020	3		Bolt
43		1		Bolt Not used on this product
44		1		Pipe Not used on this product

www.mymowerparts.com

For Discount Cub Cadet Parts Call 606-678-9623 or 606-561-4983

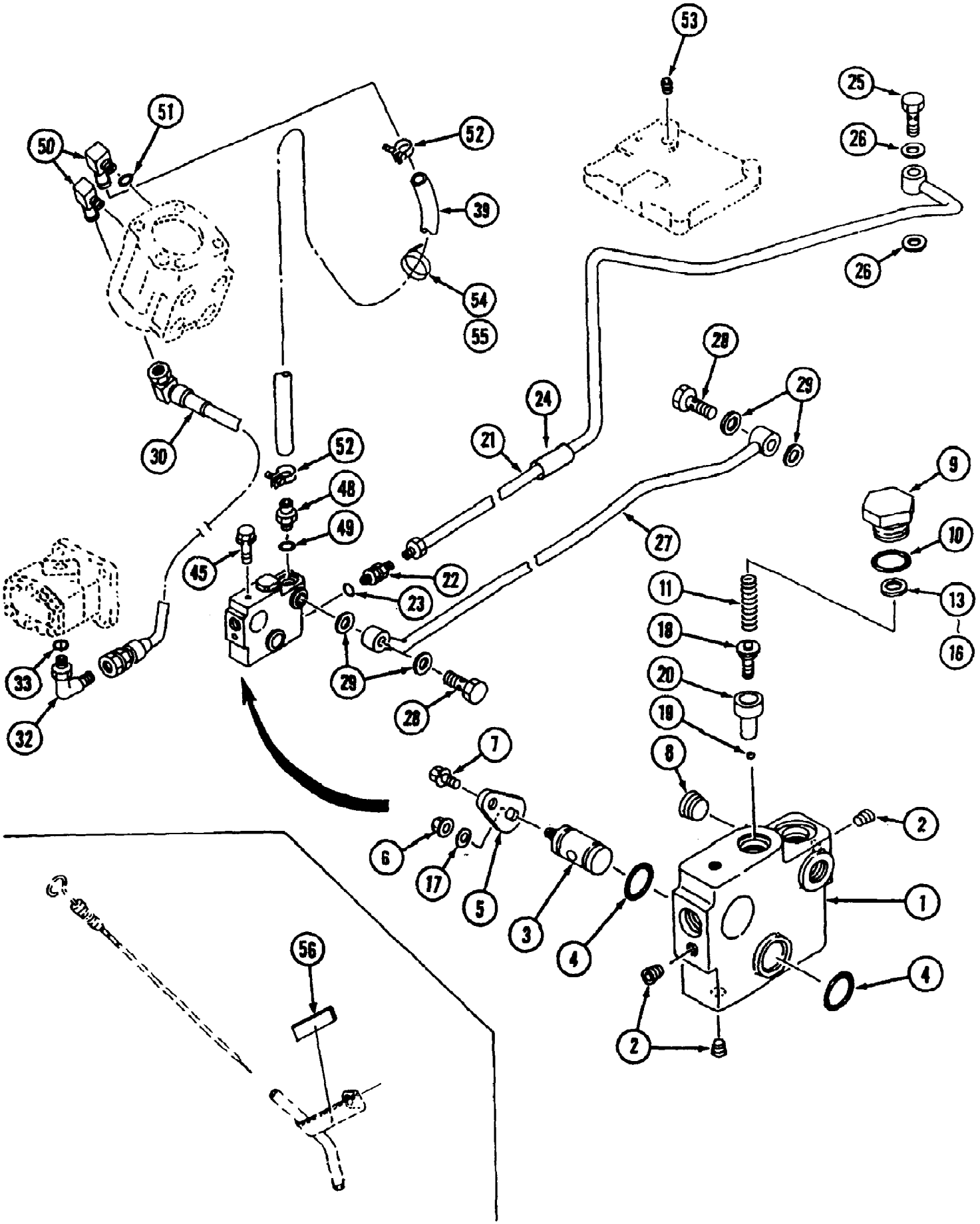

www.mymowerparts.com

For Discount Cub Cadet Parts Call 606-678-9623 or 606-561-4983

Ref #	Part Number	Qty	S/P/F	Description
	MA-19632523AG0	1	/P	Block Ass'y. Includes Items 1 - 20
1	MA-19632524AG0	1		Block
2	MA-A6010101000	3	/P	Plug
3	MA-19632525000	1		Shaft
4	MA-08300100160	2	/P	O-Ring
5	MA-19632526000	1		Plate
6	MA-F3000106011	1		Nut
7	MA-F1540108016	1		Bolt
8	MA-A6010101700	3		Plug
9	MA-10052405120	1		Plug
10	MA-08300500180	1		O-Ring
	MA-08300500160	1		O-Ring Replaces MA-08300500180 when inventory is depleted.
11	MA-10052405170	1		Spring
	MA-19632523900	1		Shim Set Includes Items 13 - 16
13	MA-10052405130	AR		Shim t=0.1
14	MA-10052405140	AR		Shim t=0.3
15	MA-10052405150	AR		Shim t=1.0
16	MA-10052405160	AR		Shim t=2.0
17	MA-03500141022	1		Washer
18	MA-10052405180	1		Poppet
19	MA-08000000600	1		Ball Not used with Relief Housing MA-10052405191
20	MA-10052405190	1	S	Relief Housing (NLA)
	MA-10052405191	1	/P	Relief Housing Replaces MA-10052405190 by also removing Ball MA-08000000600 (Ref. 19).
21	MA-19642527AG0	1		Pipe C, Press Ass'y.
22	MA-06203115171	1		Body, (Nipple)
23	MA-08301100140	1		O-Ring
24	MA-11352474000	1		Pipe
25	MA-10302534000	1		Bolt, Eye
26	MA-08331001600	2		Seal Washer
27	MA-19642529AG0	1	S	Pipe D
28	MA-10302534000	2		Bolt, Eye
29	MA-08331001600	4		Seal Washer
30	MA-19632522000	1		Hose
32	MA-36949485001	1		Adapter Includes Item 33
33	MA-08300100140	1		O-Ring
39	MA-19682525001	1	S	Hose
45	MA-F1540108016	1		Bolt
48	MA-06318117150	1		Adapter Includes Item 49
49	MA-08300100140	1		O-Ring
50	MA-06319117150	1		Elbow 90° Includes Item 51
51	MA-08300100140	1		O-Ring
52	MA-00505000280	2		Clip, Hose
53	MA-A6010101700	1		Plug
54		1		Band, Wire Not used on this product
55	MA-00511032070	1		Band, Wire
56		1		Rubber Not used on this product

www.mymowerparts.com

For Discount Cub Cadet Parts Call 606-678-9623 or 606-561-4983

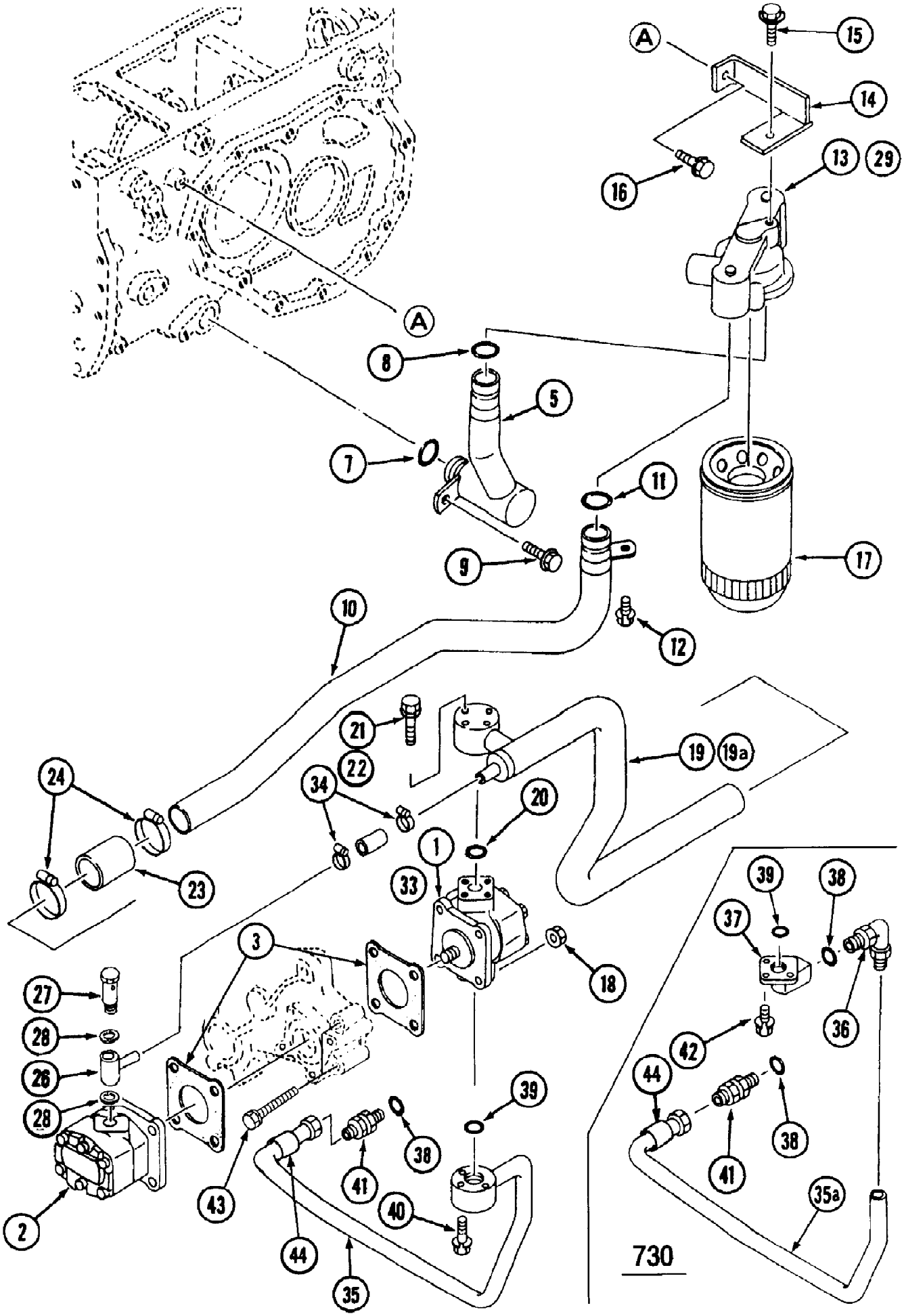

www.mymowerparts.com

For Discount Cub Cadet Parts Call 606-678-9623 or 606-561-4983

Ref #	Part Number	Qty	S/P/F	Description
1	MA-10302501002	1	/P	Pump
2	MA-10302539002	1	/P	Pump
3	MA-67700-20101	AR		Packing
5	MA-19682513AG0	1		Pipe A, Suction
7	MA-08300100320	1		O-Ring
8	MA-08300100240	1		O-Ring
9	MA-H1550110020	1		Bolt
10	MA-19642504AG0	1	/P	Pipe B, Suction
11	MA-08300100240	1		O-Ring
12	MA-F1540108016	1		Bolt
13	MA-19642507AG0	1		Base, Filter
14	MA-19642508AG0	1	/P	Bracket
15	MA-F1540108020	1		Bolt
16	MA-F1550110020	1		Bolt
17	MA-19642509000	1		Filter
18	MA-F3010108001	4		Nut
19		1		Pipe C, Suction Not used on this product
19A	MA-19682512AG0	1		Pipe D, Suction
20	MA-08300100200	1		O-Ring
21	MA-F1440106050	3		Bolt
22		1		Bolt Not used on this product
23	MA-11762527000	1		Hose
24	MA-HA230101000	2		Clip, Hose
26	MA-19672514AG0	1		Joint
27	MA-19672516000	1		Bolt Eye
28	MA-08331002200	2		Seal Washer
29		1		Base, Filter Not used on this product
33	MA-19672515000	1		Hose
34	MA-00501100280	2		Clamp, Hose
35		1		Pipe A, Press.Ass'y. Not used on this product
35A	MA-19682518AG0	1		Pipe B, Press.Ass'y.
36	MA-06205115171	1		Body (Elbow)
37	MA-19642522000	1		Joint
38	MA-08301100140	2		O-Ring
39	MA-08301100180	1		O-Ring
40		1		Bolt Not used on this product
41	MA-06203115171	1		Body (Nipple)
42	MA-F1440106020	3		Bolt
43		1		Bolt Not used on this product
44		1		Pipe Not used on this product

www.mymowerparts.com

For Discount Cub Cadet Parts Call 606-678-9623 or 606-561-4983

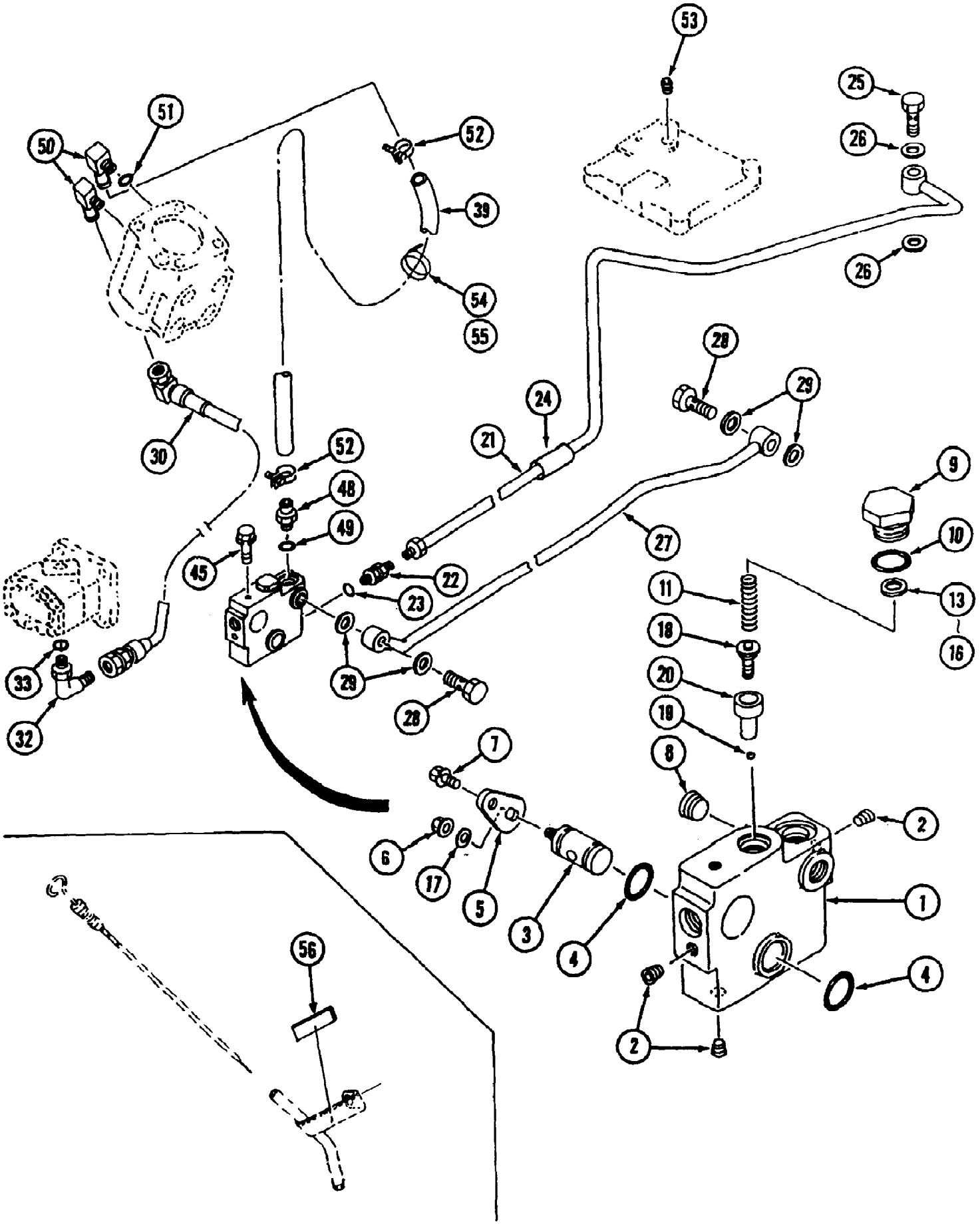

www.mymowerparts.com

For Discount Cub Cadet Parts Call 606-678-9623 or 606-561-4983

Ref #	Part Number	Qty	S/P/F	Description
	MA-19632523AG0	1	/P	Block Ass'y. Includes Items 1 - 20
1	MA-19632524AG0	1		Block
2	MA-A6010101000	3	/P	Plug
3	MA-19632525000	1		Shaft
4	MA-08300100160	2	/P	O-Ring
5	MA-19632526000	1		Plate
6	MA-F3000106011	1		Nut
7	MA-F1540108016	1		Bolt
8	MA-A6010101700	3		Plug
9	MA-10052405120	1		Plug
10	MA-08300500180	1		O-Ring
	MA-08300500160	1		O-Ring Replaces MA-08300500180 when inventory is depleted.
11	MA-10052405170	1		Spring
	MA-19632523900	1		Shim Set Includes Items 13 - 16
13	MA-10052405130	AR		Shim t=0.1
14	MA-10052405140	AR		Shim t=0.3
15	MA-10052405150	AR		Shim t=1.0
16	MA-10052405160	AR		Shim t=2.0
17	MA-03500141022	1		Washer
18	MA-10052405180	1		Poppet
19	MA-08000000600	1		Ball Not used with Relief Housing MA-10052405191
20	MA-10052405190	1	S	Relief Housing (NLA)
	MA-10052405191	1	/P	Relief Housing Replaces MA-10052405190 by also removing Ball MA-08000000600 (Ref. 19).
21	MA-19642527AG0	1		Pipe C, Press Ass'y.
22	MA-06203115171	1		Body, (Nipple)
23	MA-08301100140	1		O-Ring
24	MA-11352474000	1		Pipe
25	MA-10302534000	1		Bolt, Eye
26	MA-08331001600	2		Seal Washer
27	MA-19642529AG0	1	S	Pipe D
28	MA-10302534000	2		Bolt, Eye
29	MA-08331001600	4		Seal Washer
30	MA-19632522000	1		Hose
32	MA-36949485001	1		Adapter Includes Item 33
33	MA-08300100140	1		O-Ring
39	MA-19682525001	1	S	Hose
45	MA-F1540108016	1		Bolt
48	MA-06318117150	1		Adapter Includes Item 49
49	MA-08300100140	1		O-Ring
50	MA-06319117150	1		Elbow 90° Includes Item 51
51	MA-08300100140	1		O-Ring
52	MA-00505000280	2		Clip, Hose
53	MA-A6010101700	1		Plug
54		1		Band, Wire Not used on this product
55	MA-00511032070	1		Band, Wire
56		1		Rubber Not used on this product

www.mymowerparts.com

For Discount Cub Cadet Parts Call 606-678-9623 or 606-561-4983

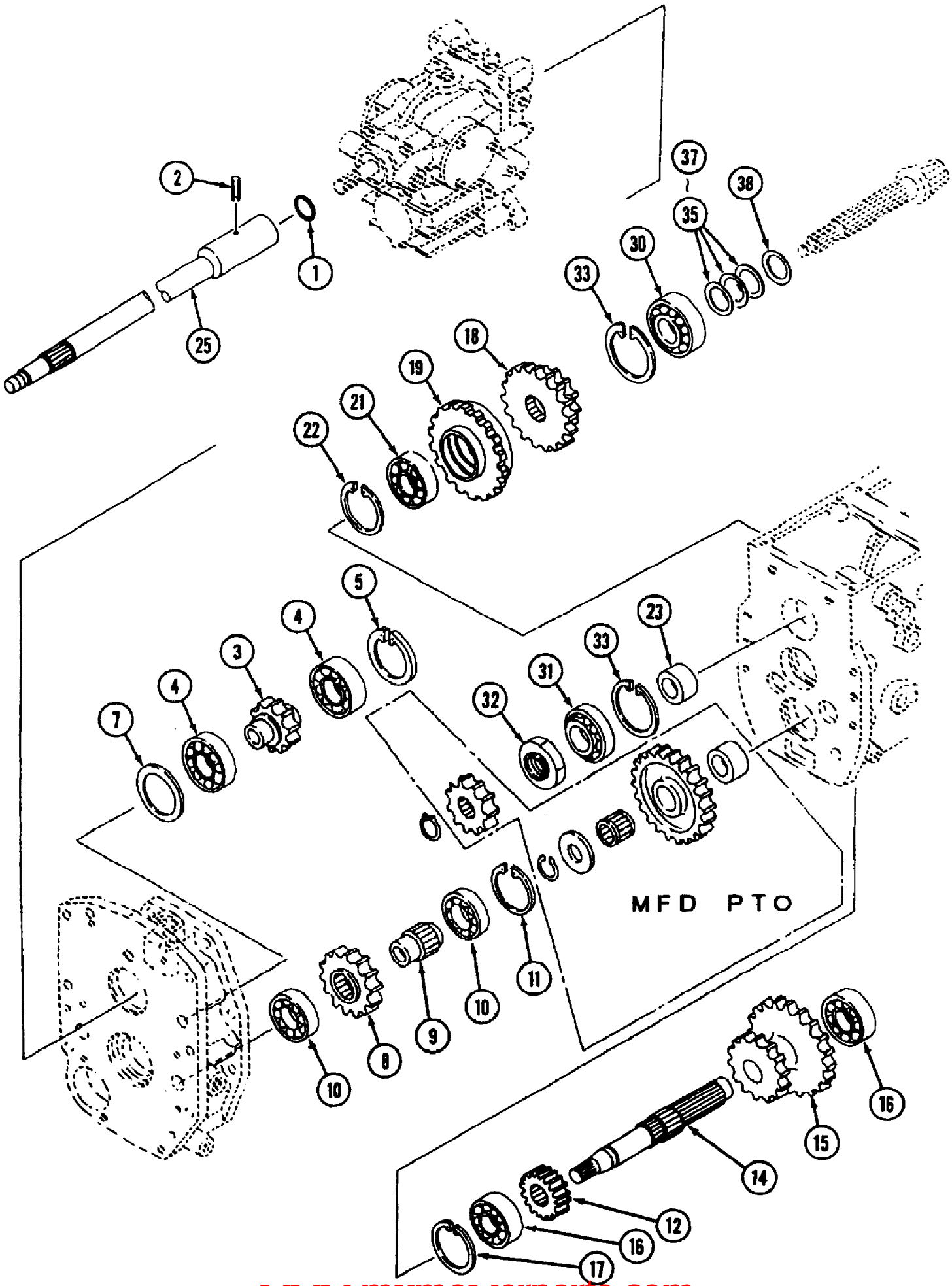

www.mymowerparts.com

For Discount Cub Cadet Parts Call 606-678-9623 or 606-561-4983

Ref #	Part Number	Qty	S/P/F	Description
1	MA-08301100200	1		O-Ring
2	MA-05500006036	1		Pin, Spring
3	MA-19641306000	1		Gear, 18T
4	MA-07500060060	2		Bearing
5	MA-07410005501	1		Ring
7	MA-07300005510	1		Liner
8	MA-19641307000	1		Gear, 26T
9	MA-19631308000	1		Boss, Spline
10	MA-07500060050	2		Bearing
11	MA-07410004701	1	/P	Ring
12	MA-19641308000	1		Gear, 1ST
14	MA-19641309000	1		Shaft, Sub Change
15	MA-19641311000	1		Gear, 26T-34T
16	MA-07500063050	2		Bearing
17	MA-07410006200	1		Ring
18	MA-19641312000	1		Gear, 19-28T
19	MA-19641313000	1		Gear, 37T
21	MA-07500062050	1		Bearing
22	MA-07410005201	1	/P	Ring
23	MA-19641243000	1		Collar
25	MA-19641305000	1	S	Shaft, Main
30	MA-07700132206	1		Bearing
31	MA-07700130305	1		Bearing
32	MA-11741273000	1		Nut (M25)
33	MA-07410006200	2		Ring
	MA-10211321000	1		Shim Set Includes Items 35 - 38
35	MA-67700-30300	AR		Shim
36	MA-67700-30400	AR		Shim
37	MA-67700-30500	AR		Shim
38	MA-67700-30600	1		Shim

www.mymowerparts.com

For Discount Cub Cadet Parts Call 606-678-9623 or 606-561-4983

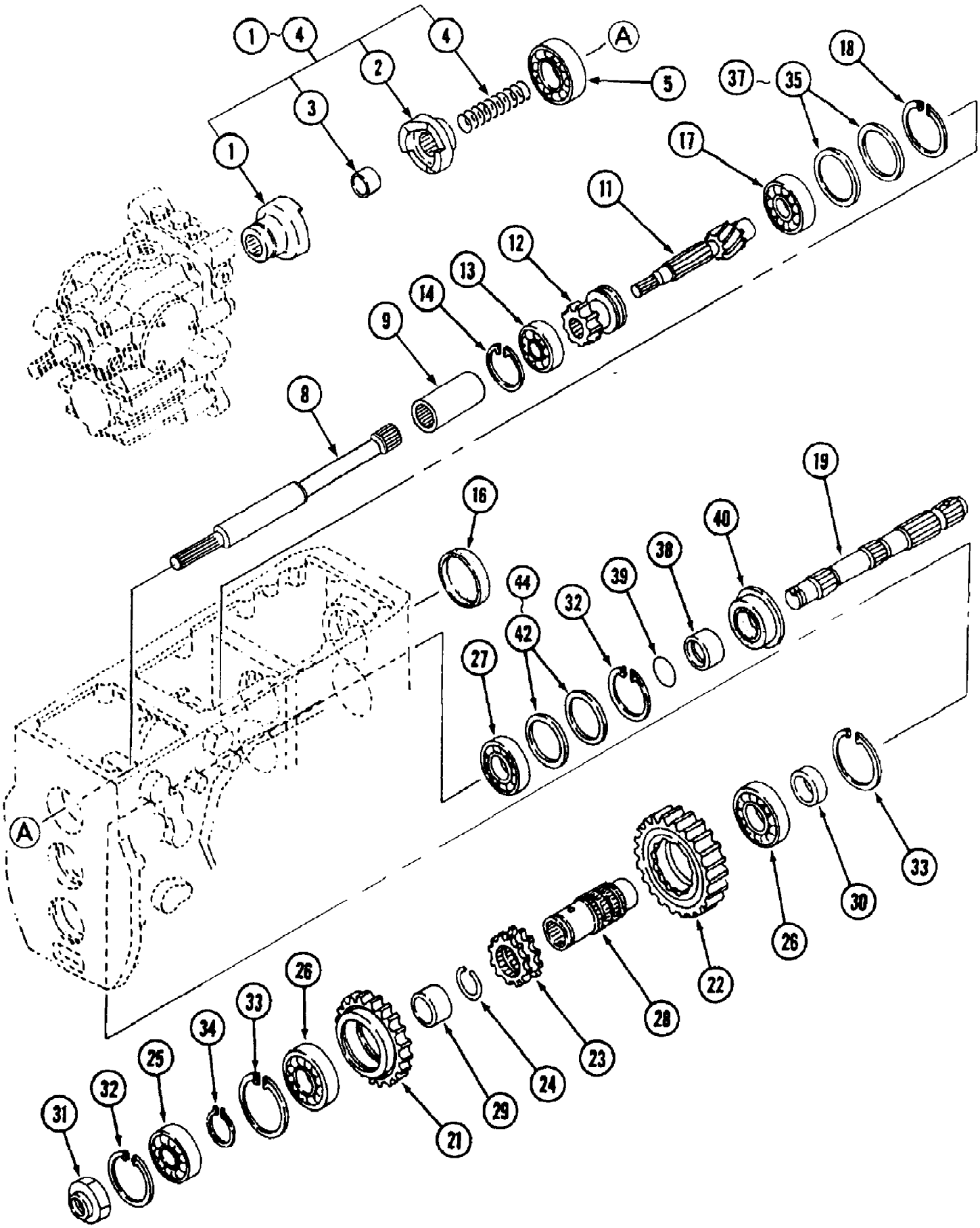

www.mymowerparts.com

For Discount Cub Cadet Parts Call 606-678-9623 or 606-561-4983

Ref #	Part Number	Qty	S/P/F	Description
	MA-19641315000	1		Clutch Kit Includes items 1-4
1	MA-19641316002	1	/P	Clutch A
2	MA-19831272000	1		Clutch B
3	MA-07972020150	1		Bushing
4	MA-19681341000	1	/P	Spring
5	MA-07500063050	1		Bearing
8	MA-19641318001	1	F	Shaft
	MA-19681346000	1	F	Shaft
9	MA-10251922000	1	S/F	Collar
	MA-10231915000	1	S/F	Collar
11	MA-19641247000	1	F	Shaft, PTO Drive
	MA-19681247001	1	F	Shaft, PTO Drive
12	MA-19641248001	1	/P	Gear, 19T
13	MA-07520663050	1		Bearing
14	MA-07410006200	1		Ring
16	MA-08340072100	1		Seal, Cap
17	MA-07520663060	1		Bearing
18	MA-07410007201	1		Ring
19	MA-19641249000	1		Shaft, PTO
21	MA-19641251000	1		Gear, 46T
22	MA-19681252000	1		Gear, 44T
23	MA-19631249000	1		Gear, Clutch
24	MA-19631253000	1		Ring
25	MA-07520663050	1		Bearing
26	MA-07500062070	2		Bearing
27	MA-07520662060	1		Bearing
28	MA-19641254000	1		Boss Spline
29	MA-19631252000	1		Collar
30	MA-19641253000	1		Collar
31	MA-11741273000	1		Nut (M25)
32	MA-07410006200	2		Ring
33	MA-07410007201	2		Ring
34	MA-07400003500	1	S	Ring
	MA-19641281000	1		Liner Set Includes Items 35 -37
35	MA-07300007202	AR		Liner
36	MA-07300007204	AR		Liner
37	MA-07300007208	AR		Liner
38	MA-10251405000	1		Bushing
39	MA-08300100300	1		O-Ring
40	MA-10211314000	1		Seal,Oil
	MA-10211318000	1		Liner Set Includes Items 42 - 44
42	MA-07300006202	AR		Liner
43	MA-07300006204	AR		Liner
44	MA-07300006208	AR		Liner

www.mymowerparts.com

For Discount Cub Cadet Parts Call 606-678-9623 or 606-561-4983

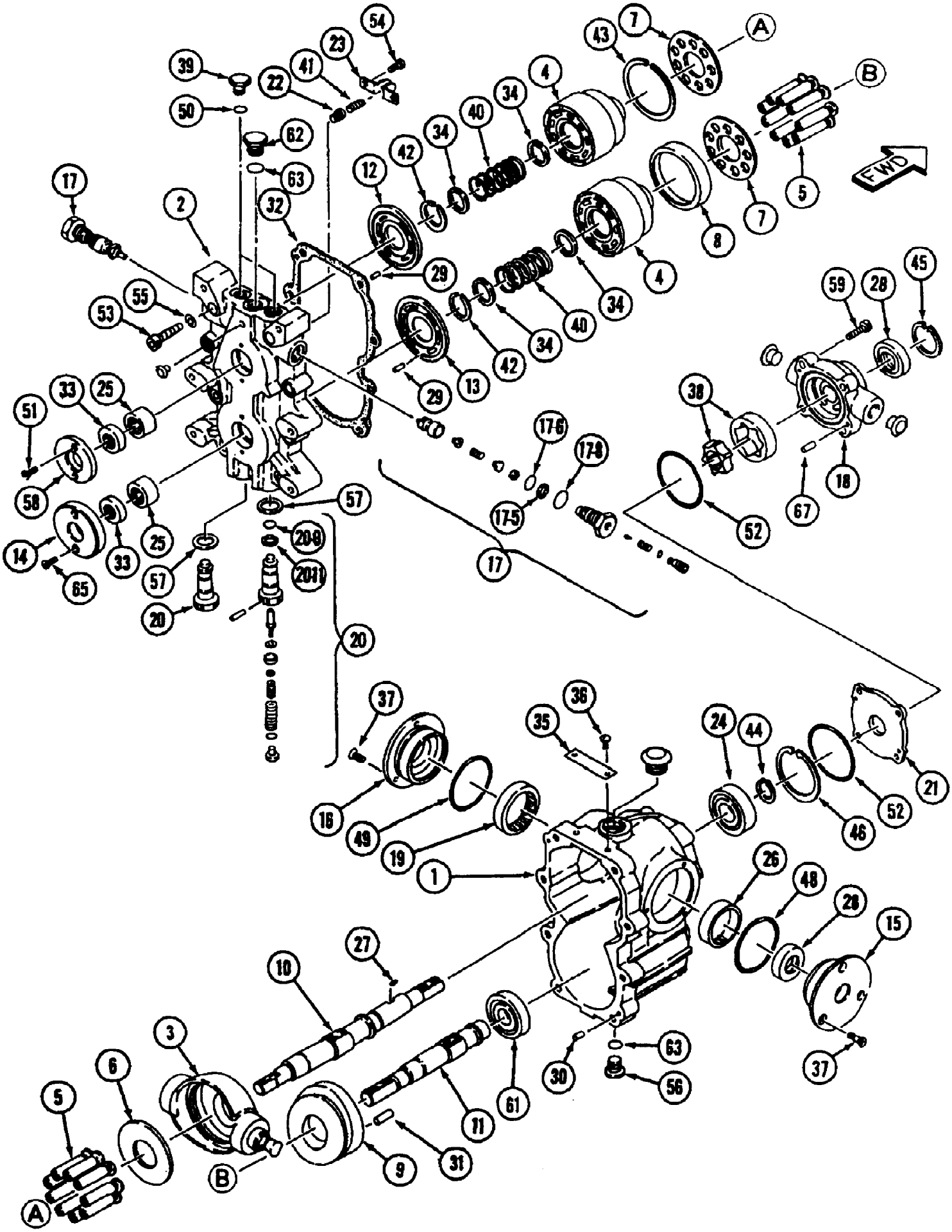

www.mymowerparts.com

For Discount Cub Cadet Parts Call 606-678-9623 or 606-561-4983

Ref #	Part Number	Qty	S/P/F	Description
1	MA-19641301111	1		Case
2	MA-19641301120	1		Block, Port
3	MA-19641301130	1		Swash, Plate
4		2		Cylinder Block
5		18		Piston S/A
6	MA-19641301170	1		Plate, Thrust
7	MA-19641301150	2		Plate, Retainer
8		1		Holder, Retainer
9		1		Swash, Plate
10	MA-19641301180	1		Shaft
11	MA-19641301190	1		Shaft
12	MA-19641301210	1		Plate, Valve
13	MA-19641301220	1		Plate, Valve
14	MA-19641301230	1		Flange
15		1		Cover A
16		1		Cover B
17	MA-19641301280	2		Valve S/A
17-5	MA-08320100140	2		Ring,Back Up
17-6	MA-08300100140	2		O-Ring
17-8	MA-08301100180	2		O-Ring
18		1		Case,Change Pump
19		1		Bearing, Needle
20	MA-19641301340	2		Valve S/A
20-9	MA-08300100140	2		O-Ring
20-11	MA-08320100140	2		Ring, Back Up
21	MA-19641301351	1		Plate
22	MA-19631301470	1		Valve
23	MA-19631301370	1		Holder, Spring
24	MA-19641301360	1		Bearing, Ball
25	MA-19641301370	2		Bearing, Needle
26		1		Bushing
27	MA-19641301310	1		Key
28	MA-19641301320	2		Seal, Oil
29	MA-19631301380	2		Pin
30	MA-19641301380	2		Pin
31	MA-19641301390	1		Pin
32	MA-19641301410	1		Gasket
33	MA-19631301140	2		Seal, Oil
34		4		Holder, Spring
35		1		Plate, Name
36		2		Screw, Drive
37	MA-A2220106014	6		Screw
38		1		Trochoid Roto S/Ar
39	MA-19641301420	2		Plug
40		2		Spring
41	MA-19631301430	1		Spring
42		2		Ring, Snap
43	MA-19641301430	1		Ring, Snap
44	MA-07400002500	1	/P	Ring, Snap
45	MA-07410004500	1		Ring, Snap
46	MA-07410006200	1		Ring, Snap
48	MA-08300200650	1		O-Ring
49	MA-19641301270	1		O-Ring

www.mymowerparts.com

For Discount Cub Cadet Parts Call 606-678-9623 or 606-561-4983

Ref #	Part Number	Qty	S/P/F	Description
50	MA-08301100110	2		O-Ring
51	MA-A2220105012	2		Screw
52	MA-19641301330	2		O-Ring
53	MA-A5440710040	8		Bolt
54	MA-A5440706010	2		Bolt
55	MA-A3600101002	8	/P	Washer, Spring
56	MA-19641301450	1		Plug
57	MA-19631301350	2		Washer, Seal
58	MA-19641301460	1		Flange
59	MA-19641301520	4		Bolt
61	MA-19641301480	1		Bearing, Ball
62	MA-19631301620	1		Plug
63	MA-08301100140	2		O-Ring
65	MA-A2220105016	2		Screw
67	MA-19641301530	2		Pin
	MA-19641301490	1	F	Seal Kit
	MA-19641301140	1	F	Cylinder Block (P)Ass'y.
	MA-19641301160	1	F	Cylinder Block (M)Ass'y.
	MA-19641301291	1	F	Change Pump Ass'y.
	MA-19641301240	1	F	Cover A
	MA-19641301260	1	F	Cover B

www.mymowerparts.com

For Discount Cub Cadet Parts Call 606-678-9623 or 606-561-4983

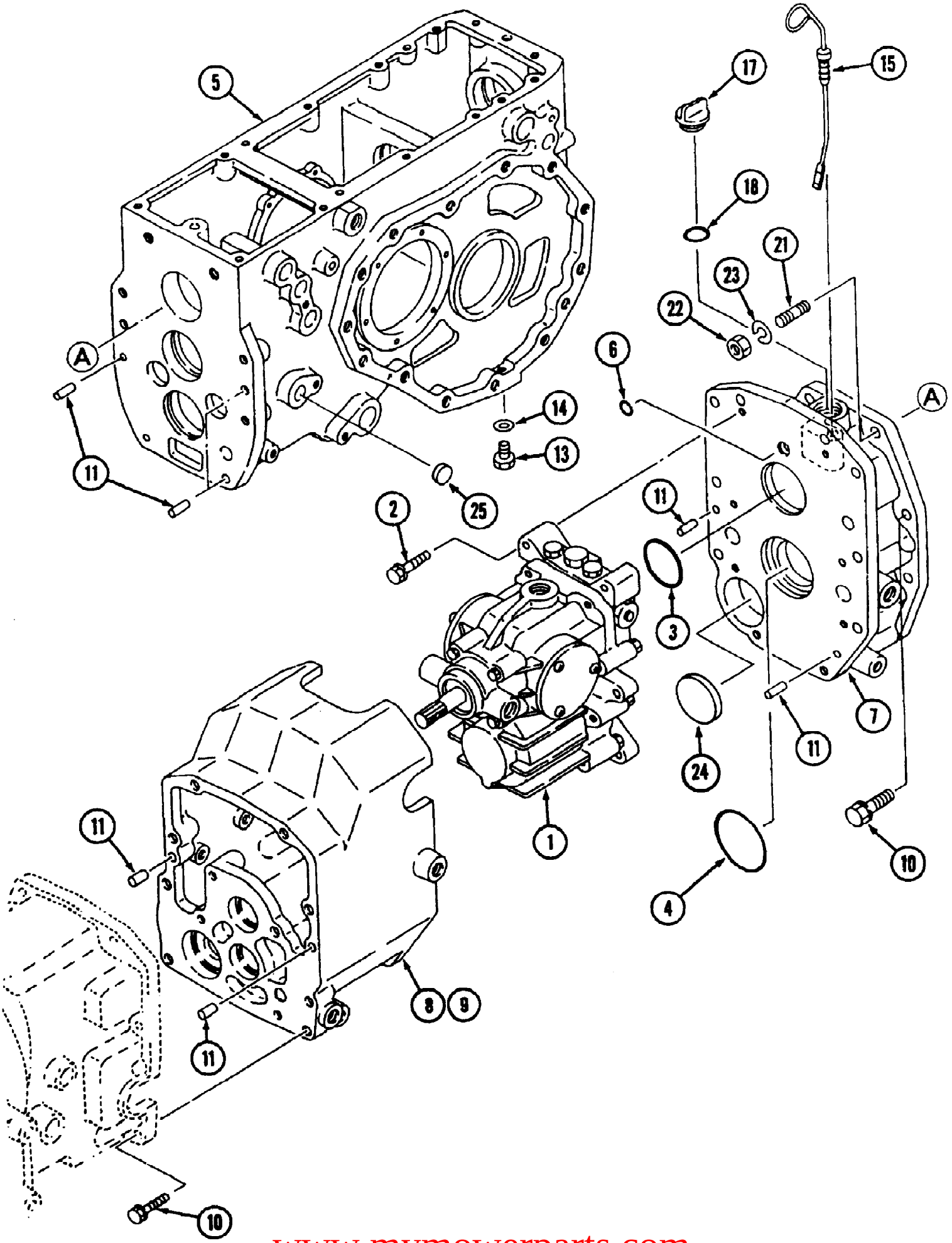

www.mymowerparts.com

For Discount Cub Cadet Parts Call 606-678-9623 or 606-561-4983

Ref #	Part Number	Qty	S/P/F	Description
1	MA-19641301000	1	/P	Hydrostatic Unit
2	MA-F1550110055	6		Bolt
3	MA-08300500560	1		O-Ring
4	MA-08300200700	1		O-Ring
5	MA-19641211AG2	1		Case T/M
6	MA-08301100140	1		P-Ring
7	MA-19641302AG0	1		Case, Center
8		1		Case, HST Not used on this product
9	MA-19641304AG0	1		Case, HST
10	MA-F1540112035	24		Bolt
11	MA-05401010020	6		Pin, Dowel
13	MA-F5000-16000	2		Plug
14	MA-08331001600	2		Seal, Washer
15	MA-19641319000	1		Dipstick
17	MA-67472-10601	1		Plug,Oiling
18	MA-08300100280	1		O-Ring
21	MA-A0620112032	2		Stud
22	MA-A3010112002	2		Nut
23	MA-A3600101202	2		Washer
24	MA-08340062100	1		Seal Cap
25	MA-08340020070	1		Seal Cap

www.mymowerparts.com

For Discount Cub Cadet Parts Call 606-678-9623 or 606-561-4983

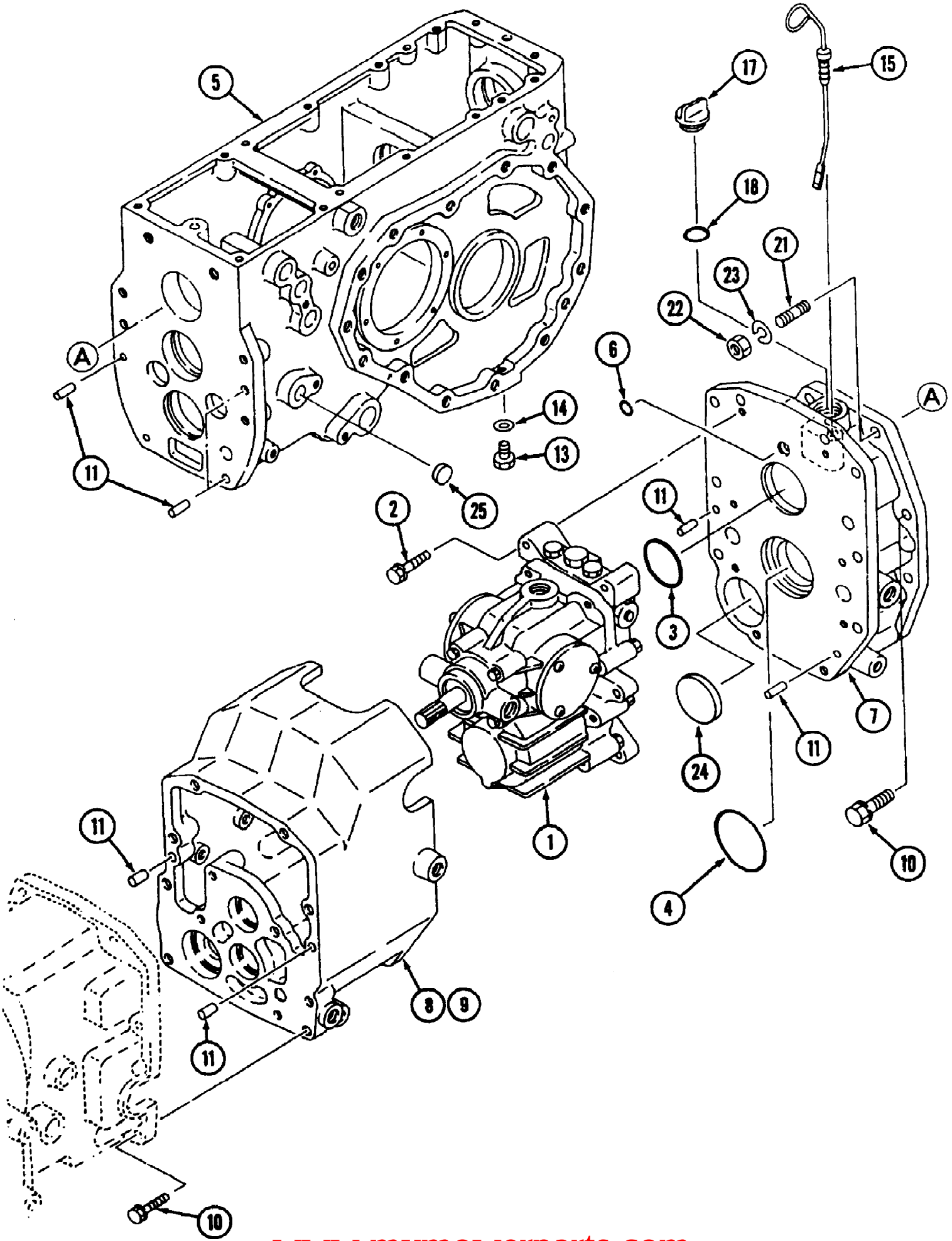

www.mymowerparts.com

For Discount Cub Cadet Parts Call 606-678-9623 or 606-561-4983

Ref #	Part Number	Qty	S/P/F	Description
1	MA-19641301000	1	/P	Hydrostatic Unit
2	MA-F1550110055	6		Bolt
3	MA-08300500560	1		O-Ring
4	MA-08300200700	1		O-Ring
5	MA-19641211AG2	1		Case T/M
6	MA-08301100140	1		P-Ring
7	MA-19641302AG0	1		Case, Center
8	MA-19641303AG1	1	/P	Case, HST
9		1		Case, HST Not used on this product
10	MA-F1540112035	24		Bolt
11	MA-05401010020	6		Pin, Dowel
13	MA-F5000-16000	2		Plug
14	MA-08331001600	2		Seal, Washer
15	MA-19641319000	1		Dipstick
17	MA-67472-10601	1		Plug,Oiling
18	MA-08300100280	1		O-Ring
21	MA-A0620112032	2		Stud
22	MA-A3010112002	2		Nut
23	MA-A3600101202	2		Washer
24		1		Seal Cap Not used on this product
25		1		Seal Cap Not used on this product

www.mymowerparts.com

For Discount Cub Cadet Parts Call 606-678-9623 or 606-561-4983

Intake & Exhaust 30 HP Eng (7300 SN 21932-Lower/7305 SN 23069-Lower)

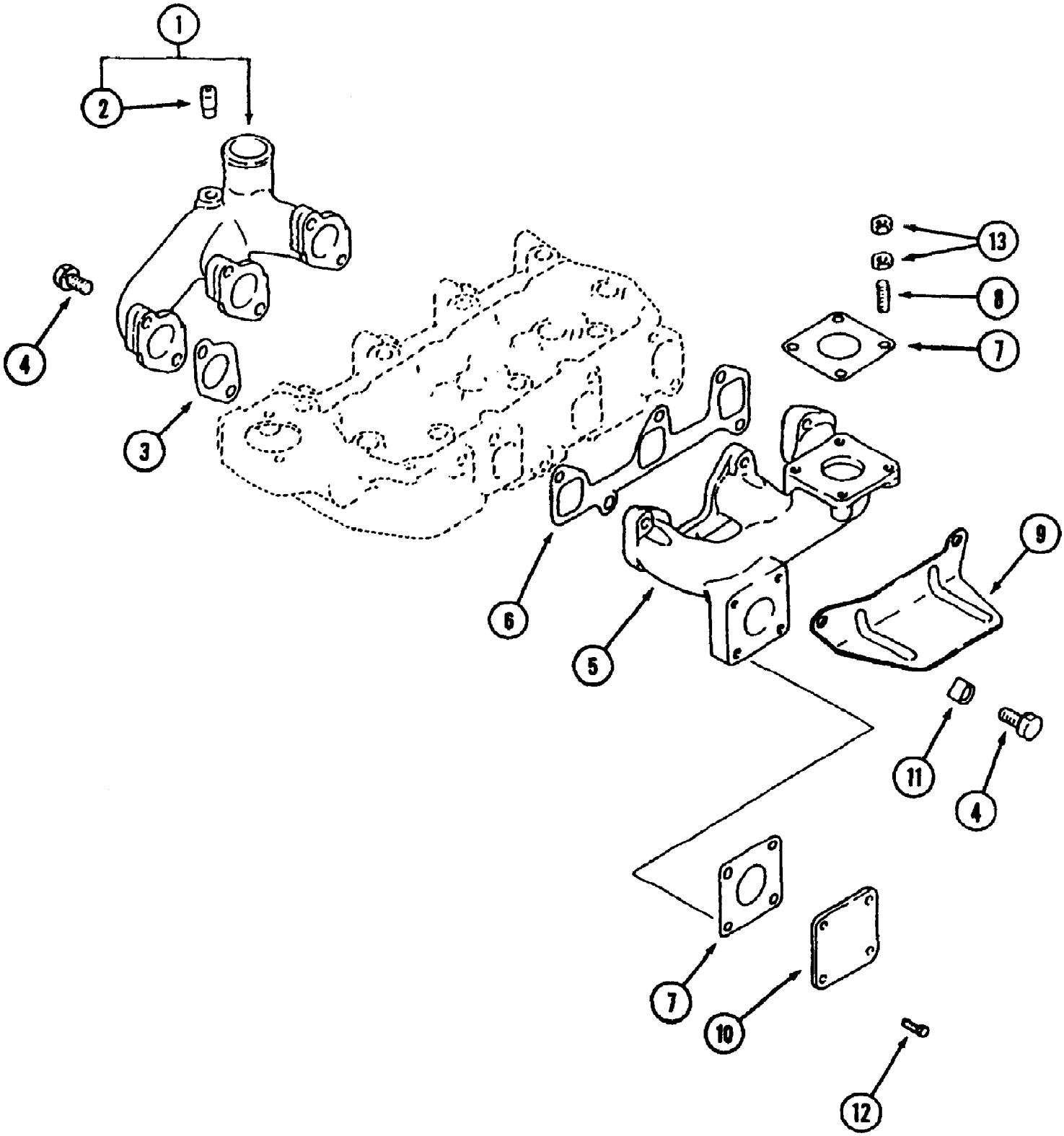

www.mymowerparts.com

For Discount Cub Cadet Parts Call 606-678-9623 or 606-561-4983

Intake & Exhaust 30 HP Eng (7300 SN 21932-Lower/7305 SN 23069-Lower)

Ref #	Part Number	Qty	S/P/F	Description
1	MA-MM407314	1		Manifold Ass'y., Intake
2	MA-K9644171	1		Pipe
3	MA-MM407305	3	S	Gasket, Intake Manifold
4	MA-F1035-10030	11	/P	Bolt
5	MA-MM407318	1		Manifold, Exhaust
6	MA-30H30-00100	1		Gasket, Exhaust Manifold
7	MA-30A30-00200	2		Gasket
8	MA-MF401936	4	S	Stud
9	MA-MM409422	1		Cover, Starter
10	MA-MM412569	1		Cover
11	MA-K9644880	1		Clamp, Cable
12	MA-MF101253	4	S	Bolt
13	MA-MM436867	8		Nut

www.mymowerparts.com

For Discount Cub Cadet Parts Call 606-678-9623 or 606-561-4983

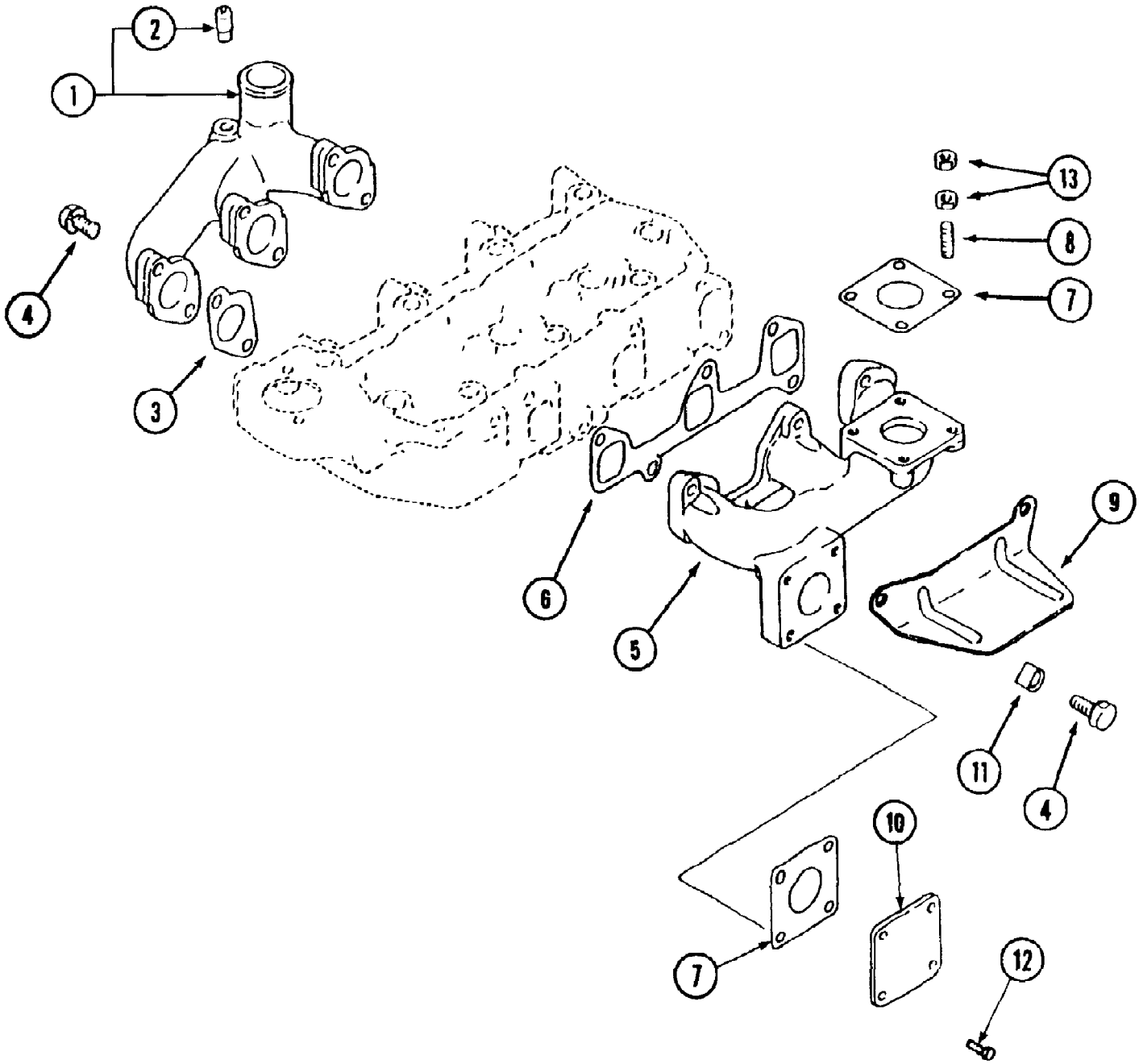

www.mymowerparts.com

For Discount Cub Cadet Parts Call 606-678-9623 or 606-561-4983

Intake & Exhaust Parts 30HP Engine 7300 S/N 21933 & Up

Ref #	Part Number	Qty	S/P/F	Description
1	MA-MM407314	1		Manifold Ass'y., Intake
2	MA-K9644171	1		Pipe
3	MA-MM407305	3	S	Gasket, Intake Manifold
4	MA-MF101287	11	S	Bolt
5	MA-MM407318	1		Manifold, Exhaust
6	MA-30H30-00100	1		Gasket, Exhaust Manifold
7	MA-30A30-00200	2		Gasket
8	MA-MF401936	4	S	Stud
9	MA-MM409422	1		Cover, Starter
10	MA-MM412569	1		Cover
11	MA-K9644880	1		Clamp, Cable
12	MA-MF101253	4	S	Bolt
13	MA-MM436867	8		Nut

www.mymowerparts.com

For Discount Cub Cadet Parts Call 606-678-9623 or 606-561-4983

Lubricating Parts 30 HP Eng (7300 SN 21932-Lower/7305 SN 23069-Lower)

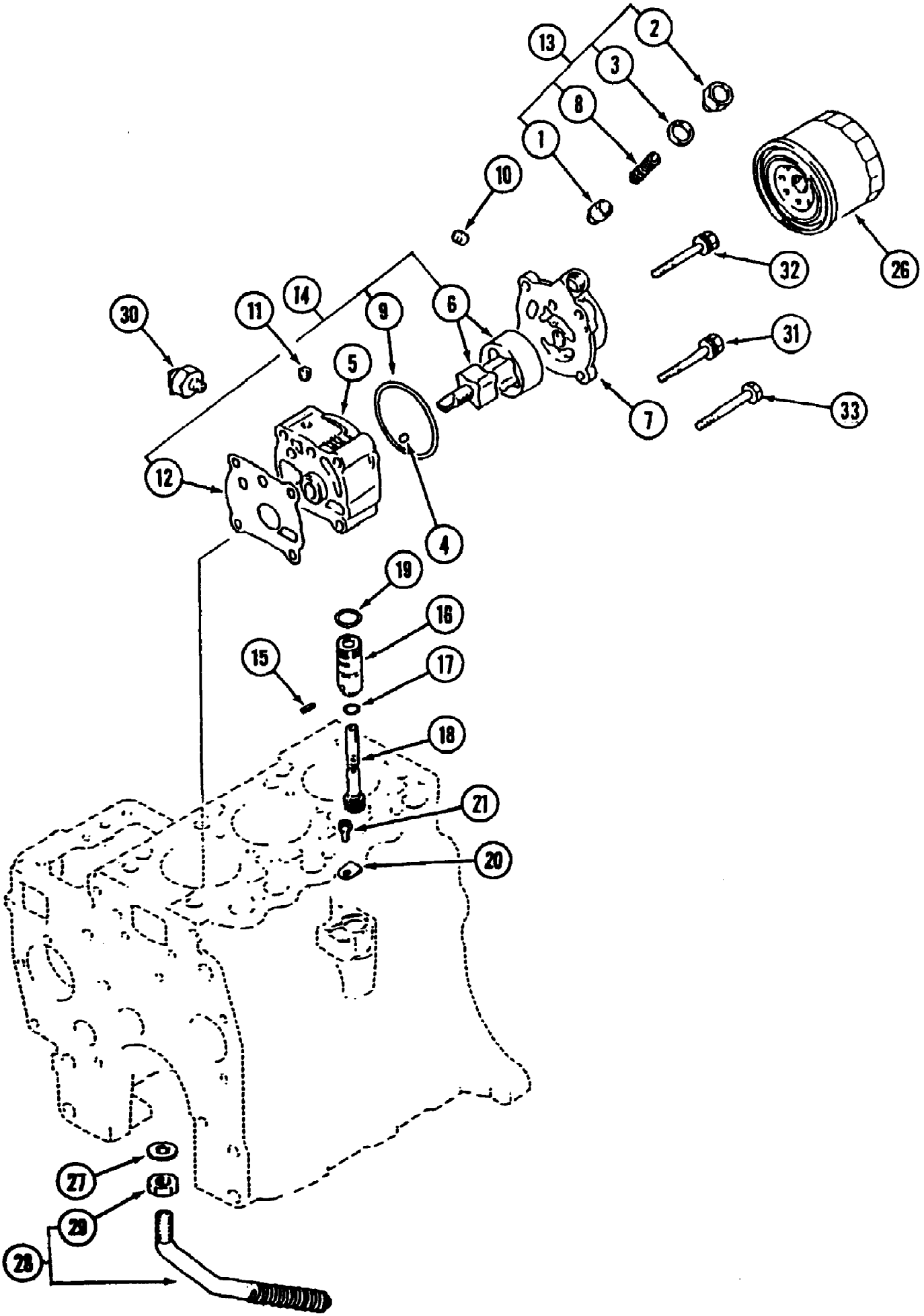

www.mymowerparts.com

For Discount Cub Cadet Parts Call 606-678-9623 or 606-561-4983

Lubricating Parts 30 HP Eng (7300 SN 21932-Lower/7305 SN 23069-Lower)

Ref #	Part Number	Qty	S/P/F	Description
	MA-MM40937101	1	/P	Oil Pump Ass'y. Includes Items 1 - 11
1	MA-MD001402	1		Plunger, Relief
2	MA-MD001404	1		Plug
3	MA-MD000312	1		Gasket, Oil Drain Plug
4	MA-K7913410	2	S	Pin, Dowel
5	MA-MM409244	1		Body, Oil Pump
6	MA-MM407125	1		Rotor Ass'y., Oil Pump
7	MA-MM40937201	1	/P	Cover, Oil Pump
8	MA-MM409204	1		Spring, Relief
9	MA-08300200750	1	/P	O-Ring
10	MA-A6010101300	1		Plug, Taper
11	MA-A6010101000	1	/P	Plug, Taper
12	MA-30H35-00101	1		Gasket, Oil Pump Body
13	MA-MM409893	1		Service Kit, Relief Valve
14	MA-30A97-00038	1		Service Kit, Rotor
	MA-MM430598	1	S	Driven Unit, Speedmeter Includes Items 15 - 19
15	MA-MF472535	1	S	Pin, Spring
16	MA-MM430419	1	/P	Sleeve, Speedmeter Gear
17	MA-MD701788	1		O-Ring (B)
18	MA-MM407171	1	S	Gear, Speedmeter Driven
19	MA-MF520012	1	S	O-Ring
20	MA-MD701789	1		Plate, Locking
21	MA-MF241224	1		Bolt, W/Washer
26	MA-MD135737	1	S	Filter Ass'y., Oil
27	MA-MF660036	1		Gasket
28	MA-MM430178	1		Screen Ass'y., Oil
29	MA-MF430729	1		Nut, Jam
30	MA-31A90-00100	1	S	Switch Ass'y., Oil Pressure
31	MA-MF244864	2	S	Bolt, Washer Ass'y.
32	MA-MF244866	1		Bolt, Washer Ass'y.
33	MA-F1035-08060	1		Bolt

www.mymowerparts.com

For Discount Cub Cadet Parts Call 606-678-9623 or 606-561-4983

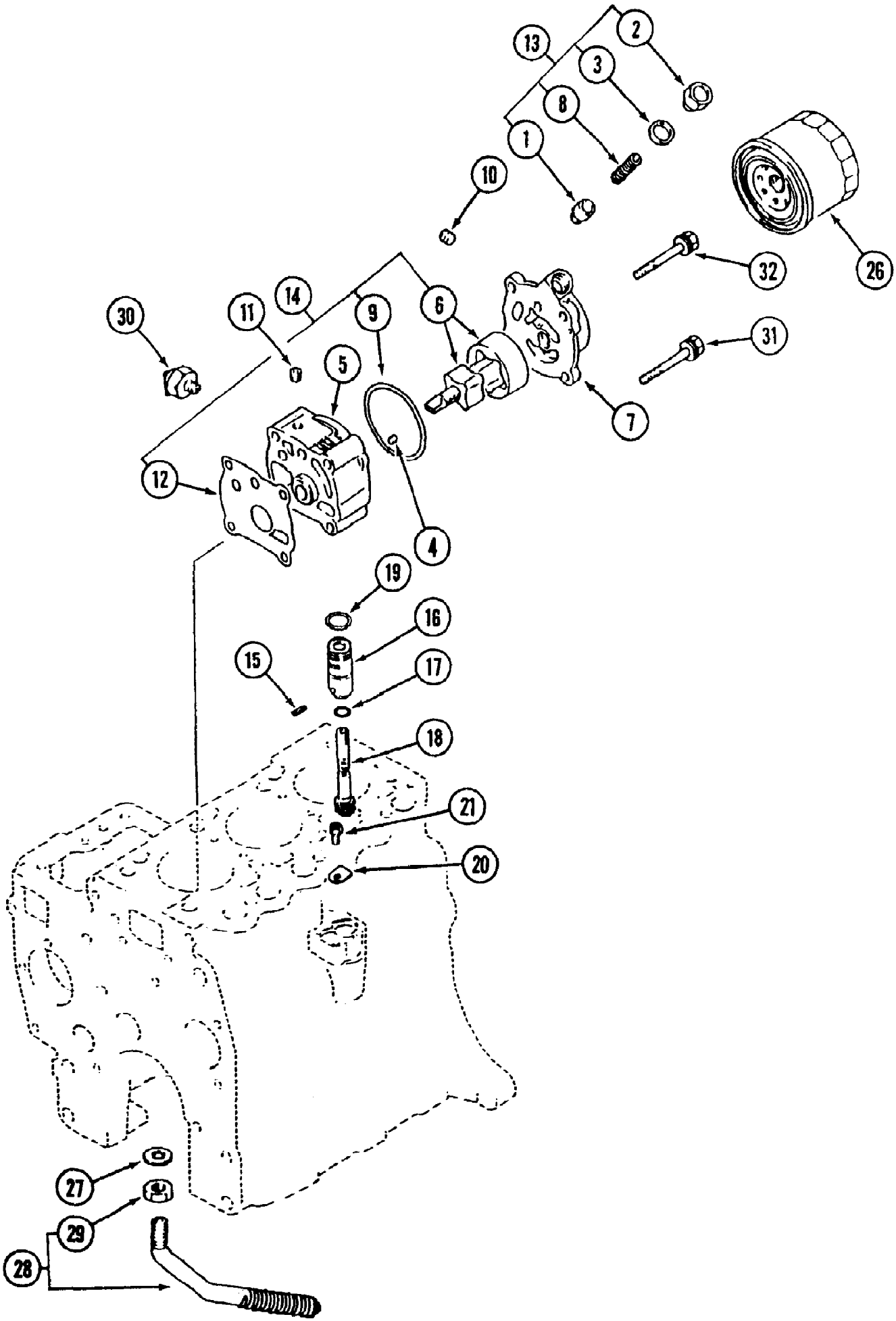

www.mymowerparts.com

For Discount Cub Cadet Parts Call 606-678-9623 or 606-561-4983

Ref #	Part Number	Qty	S/P/F	Description
	MA-MM40937101	1	/P	Oil Pump Ass'y. Includes items 1-11
1	MA-MD001402	1		Plunger, Relief
2	MA-MD001404	1		Plug
3	MA-MD000312	1		Gasket, Oil Drain Plug
4	MA-K7913410	2	S	Pin, Dowel
5	MA-MM409244	1		Body, Oil Pump
6	MA-MM407125	1		Rotor Ass'y.
7	MA-MM40937201	1	/P	Cover, Oil Pump
8	MA-MM409204	1		Spring, Relief
9	MA-08300200750	1	/P	O-Ring
10	MA-MS661121	1		Plug, Taper
11	MA-MS661120	1	S	Plug, Taper
12	MA-30H35-00100	1		Gasket, Oil Pump
13	MA-MM409893	1		Service Kit, Relief Valve
14	MA-30A97-00038	1		Service Kit, Rotor
	MA-MM430598	1	S	Speedometer Driven Unit Includes items 15-19
15		1		Pin, Spring
16		1		Sleeve, Speedometer Gear
17	MA-MD701788	1		O-Ring (B)
18		1		Gear, Speedometer Driven
19	MA-08300100180	1	/P	O-Ring
20	MA-MD701789	1		Plate, Locking
21	MA-MF241224	1		Bolt, w/Washer
26	MA-30A40-00103	1	/P	Oil Filter Ass'y.
27	MA-MF660036	1		Gasket
28	MA-MM430178	1		Oil Screen Ass'y.
29	MA-MF430729	1		Nut, Jam
30	MA-31A90-00100	1	S	Oil Pressure Switch Ass'y.
31	MA-MF244864	3	S	Bolt. Washer Ass'y.
32	MA-MF244866	1		Bolt, Washer Ass'y.

www.mymowerparts.com

For Discount Cub Cadet Parts Call 606-678-9623 or 606-561-4983

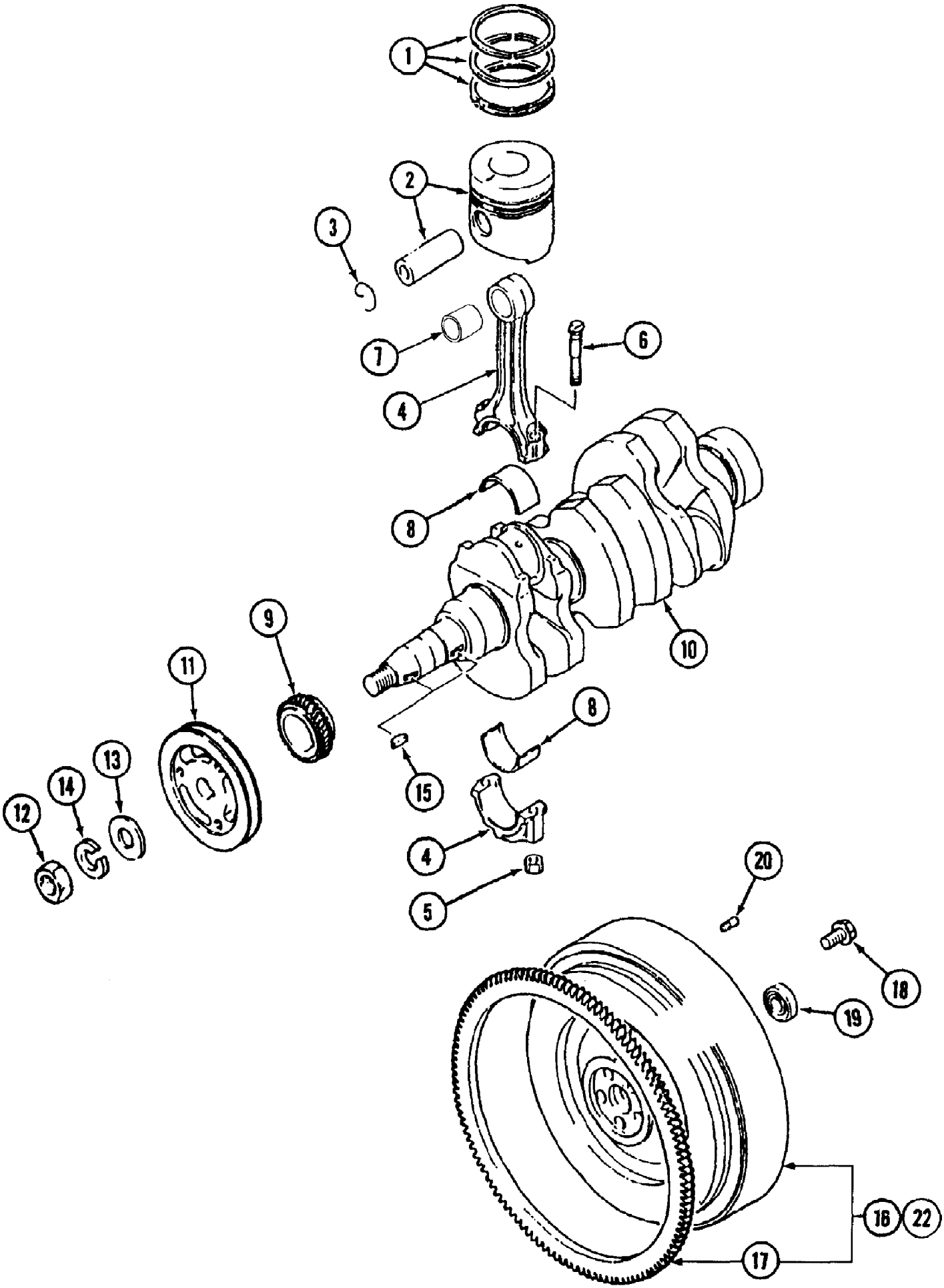

www.mymowerparts.com

For Discount Cub Cadet Parts Call 606-678-9623 or 606-561-4983

Ref #	Part Number	Qty	S/P/F	Description
1	MA-MM434512	3		Ring Set, Piston STD
	MA-MM435226	3		Ring Set, Piston 0.25 OS
	MA-MM435227	3		Ring Set, Piston 0.50 OS
	MA-MM435228	3		Ring Set, Piston 0.75 OS
2	MA-MM436772	3		Piston & Pin Set STD
	MA-MM436773	3		Piston & Pin Set 0.25 OS
	MA-MM436774	3		Piston & Pin Set 0.50 OS
	MA-MM436775	3		Piston & Pin Set 0.75 OS
3	MA-MM300140	6		Clip, Piston Pin
	MA-MM43843202	3	S	Rod Ass'y., Connecting
4		3		Cap, Connecting Rod Part of Rod Ass'y., Connecting
5	MA-MD006704	6		Nut, Con.Rod
6	MA-MM412869	6		Bolt, Con. Rod
7		3		Rod Part of Rod Ass'y., Connecting
8	MA-MM438669	3	S	Bearing Set, Con. Rod STD
	MA-MM438670	3	S	Bearing Set, Con. Rod 0.25 US
	MA-MM438671	3	S	Bearing Set, Con. Rod 0.50 US
	MA-MM438672	3		Bearing Set, Con. Rod 0.75 US
9	MA-MM430859	1		Gear, Crankshaft
10	MA-MM41288601	1	S	Crankshaft
11	MA-30A20-00200	1		Pulley, Crankshaft
12	MA-MF430731	1	S	Nut, Jam
13	MA-MF450011	1		Washer, Plain
14	MA-MF450411	1	S	Washer,Spring
15	MA-MF476215	2		Key, Woodruff
16		1		Flywheel Sub Ass'y. Not used on this product.
17	MA-MD040556	1		Gear, Ring
18	MA-MD952231	5	S	Bolt, Drive Plate
19	MA-MD002613	1	S	Bearing, Ball
20		1		Pin, Dowel Not used on this product.
22	MA-30H21-0105D	1		Flywheel Sub Ass'y.

www.mymowerparts.com

For Discount Cub Cadet Parts Call 606-678-9623 or 606-561-4983

Main Moving Parts Dual Clutch 30HP Engine 7300 S/N 21933 & Up

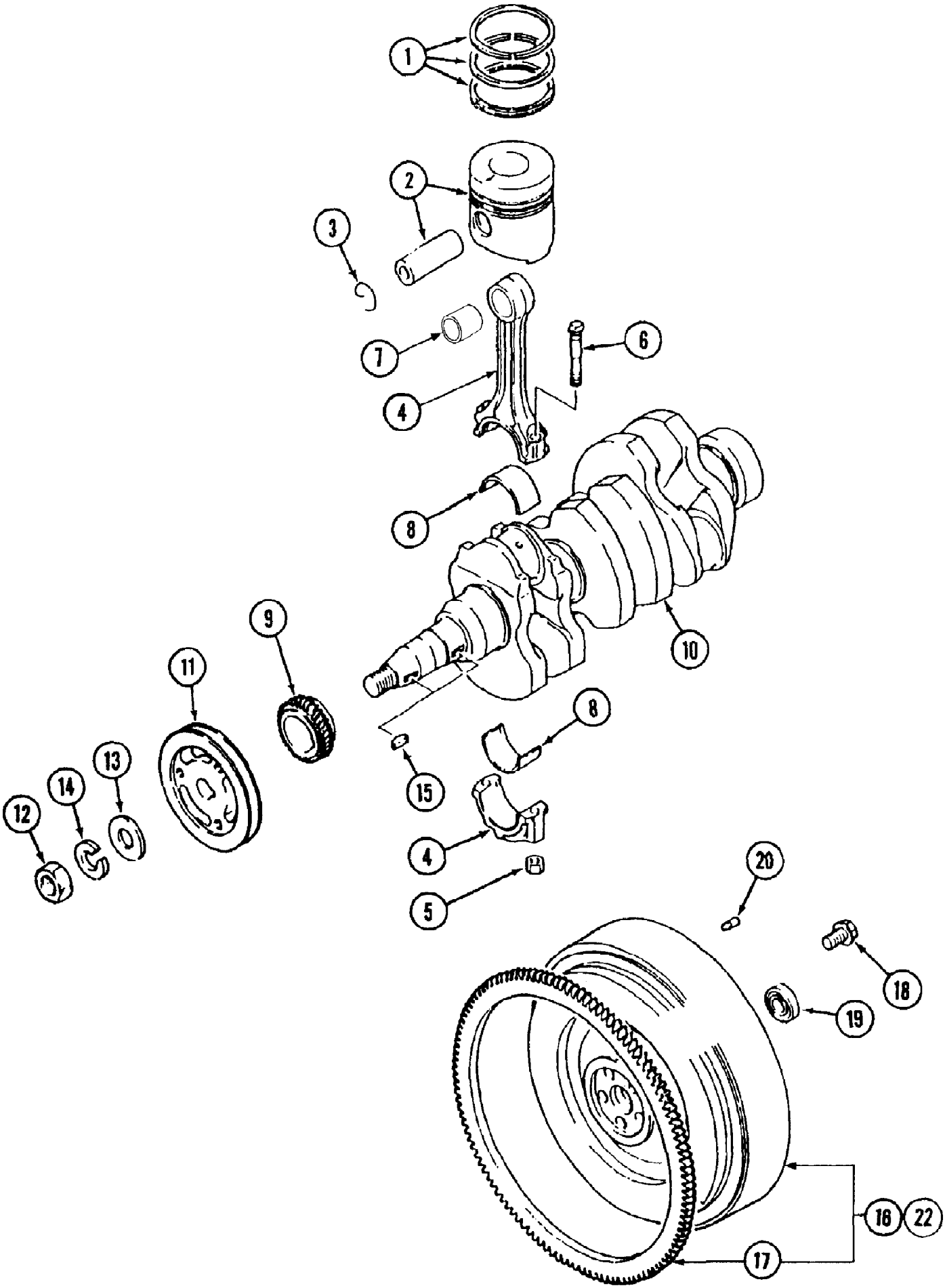

www.mymowerparts.com

For Discount Cub Cadet Parts Call 606-678-9623 or 606-561-4983

Main Moving Parts Dual Clutch 30HP Engine 7300 S/N 21933 & Up

Ref #	Part Number	Qty	S/P/F	Description
1	MA-MM434512	3		Ring Set, Piston STD
	MA-MM435226	3		Ring Set, Piston 0.25 O. S.
	MA-MM435227	3		Ring Set, Piston 0.50 O. S.
	MA-MM435228	3		Ring Set, Piston 0.75 O. S.
2	MA-MM436772	3		Piston & Pin Set STD
	MA-MM436773	3		Piston & Pin Set 0.25 O. S.
	MA-MM436774	3		Piston & Pin Set 0.50 O. S
	MA-MM436775	3		Piston & Pin Set 0.75 O. S.
3	MA-MM300140	6		Clip, Piston Pin
4	MA-MM43843202	3	S	Rod Ass'y., Connecting Includes items 4-7
4		3		Connecting Rod & Cap
5	MA-MD006704	6		Nut, Connecting Rod
6	MA-MM412869	6		Bolt, Connection Rod
7		3		Bearing, Small End
8	MA-MM438669	3	S	Bearing Set, Con. Rod STD
	MA-MM438670	3	S	Bearing Set, Con. Rod 0.25 U. S.
	MA-MM438671	3	S	Bearing Set, Con. Rod 0.50 U. S.
	MA-MM438672	3		Bearing Set, Con. Rod 0.75 U. S.
9	MA-MM430859	1		Gear, Crankshaft
10	MA-MM41288601	1	S	Crankshaft
11	MA-30A20-00500	1		Pulley, Crankshaft
12	MA-MF430731	1	S	Nut, Jam
13	MA-MF450011	1		Washer, Plain
14	MA-MF450411	1	S	Washer, Spring
15	MA-MF476215	2		Key, Woodruff
16	MA-30H21-01061	-		Flywheel Ass'y Not used on this Model
17	MA-MD040556	1		Gear, Ring
18	MA-MD952231	5	S	Bolt, Drive Plate
19	MA-MD002613	1	S	Bearing, Ball
20	MA-MF472404	-		Pin, Dowel Not used on this Model
22	MA-30H21-01051	1	/P	Flywheel Ass'y.

www.mymowerparts.com

For Discount Cub Cadet Parts Call 606-678-9623 or 606-561-4983

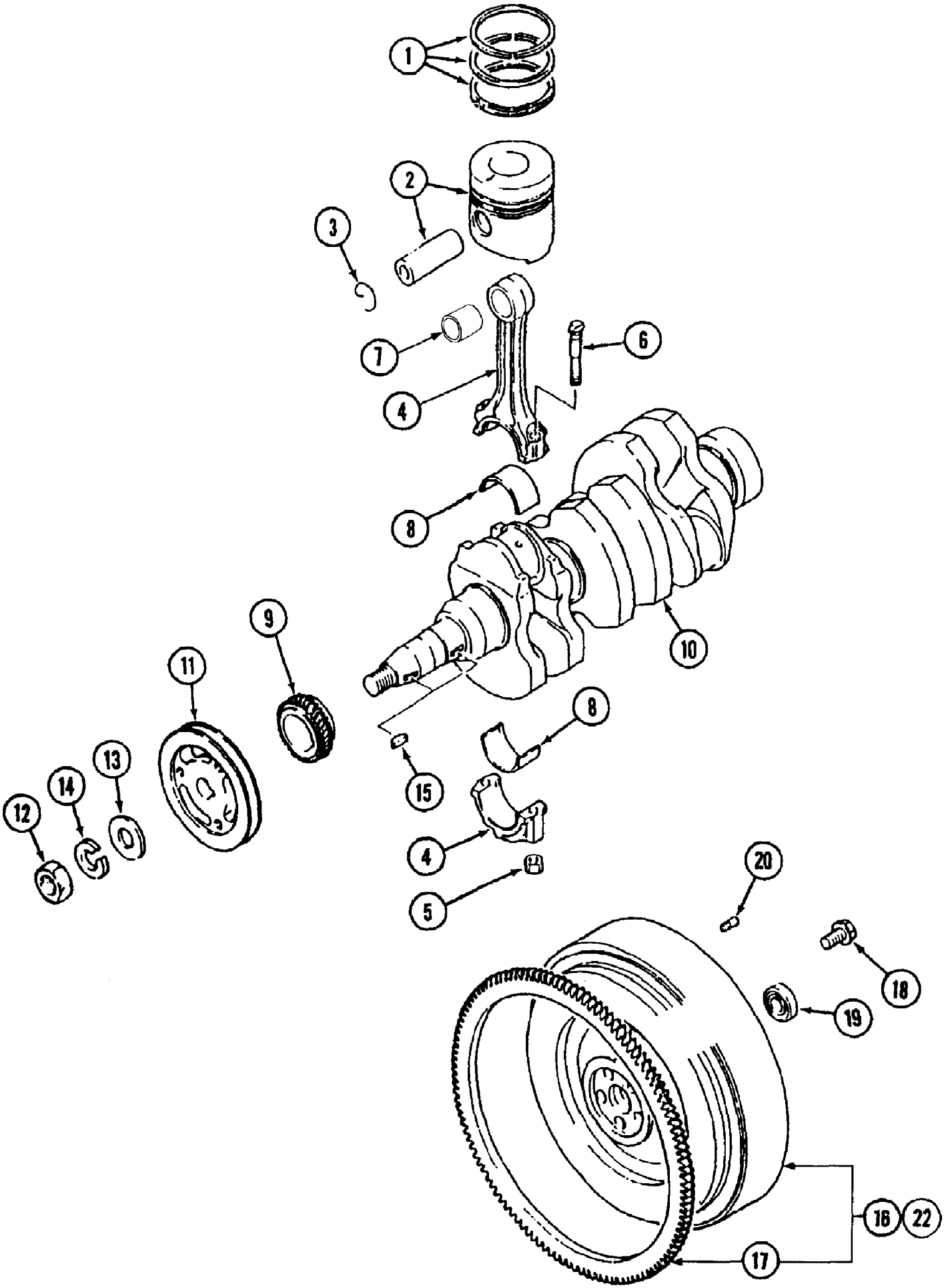

www.mymowerparts.com

For Discount Cub Cadet Parts Call 606-678-9623 or 606-561-4983

Ref #	Part Number	Qty	S/P/F	Description
1	MA-MM434512	3		Ring Set, Piston STD
	MA-MM435226	3		Ring Set, Piston 0.25 OS
	MA-MM435227	3		Ring Set, Piston 0.50 OS
	MA-MM435228	3		Ring Set, Piston 0.75 OS
2	MA-MM436772	3		Piston & Pin Set STD
	MA-MM436773	3		Piston & Pin Set 0.25 OS
	MA-MM436774	3		Piston & Pin Set 0.50 OS
	MA-MM436775	3		Piston & Pin Set 0.75 OS
3	MA-MM300140	6		Clip, Piston Pin
	MA-MM43843202	3	S	Rod Ass'y., Connecting
4		3		Cap, Connecting Rod Part of Rod Ass'y., Connecting
5	MA-MD006704	6		Nut, Con.Rod
6	MA-MM412869	6		Bolt, Con. Rod
7		3		Rod Part of Rod Ass'y., Connecting
8	MA-MM438669	3	S	Bearing Set, Con. Rod STD
	MA-MM438670	3	S	Bearing Set, Con. Rod 0.25 US
	MA-MM438671	3	S	Bearing Set, Con. Rod 0.50 US
	MA-MM438672	3		Bearing Set, Con. Rod 0.75 US
9	MA-MM430859	1		Gear, Crankshaft
10	MA-MM41288601	1	S	Crankshaft
11	MA-30A20-00200	1		Pulley, Crankshaft
12	MA-MF430731	1	S	Nut, Jam
13	MA-MF450011	1		Washer, Plain
14	MA-MF450411	1	S	Washer, Spring
15	MA-MF476215	2		Key, Woodruff
16	MA-30H21-0106D	1		Flywheel Sub Ass'y.
17	MA-MD040556	1		Gear, Ring
18	MA-MD952231	5	S	Bolt, Drive Plate
19	MA-MD002613	1	S	Bearing, Ball
20	MA-MF472404	3		Pin, Dowel
22		1		Flywheel Sub Ass'y. Not used on this product.

www.mymowerparts.com

For Discount Cub Cadet Parts Call 606-678-9623 or 606-561-4983

Main Moving Parts Single Clutch 30HP Engine 7300 S/N 21933 & Up

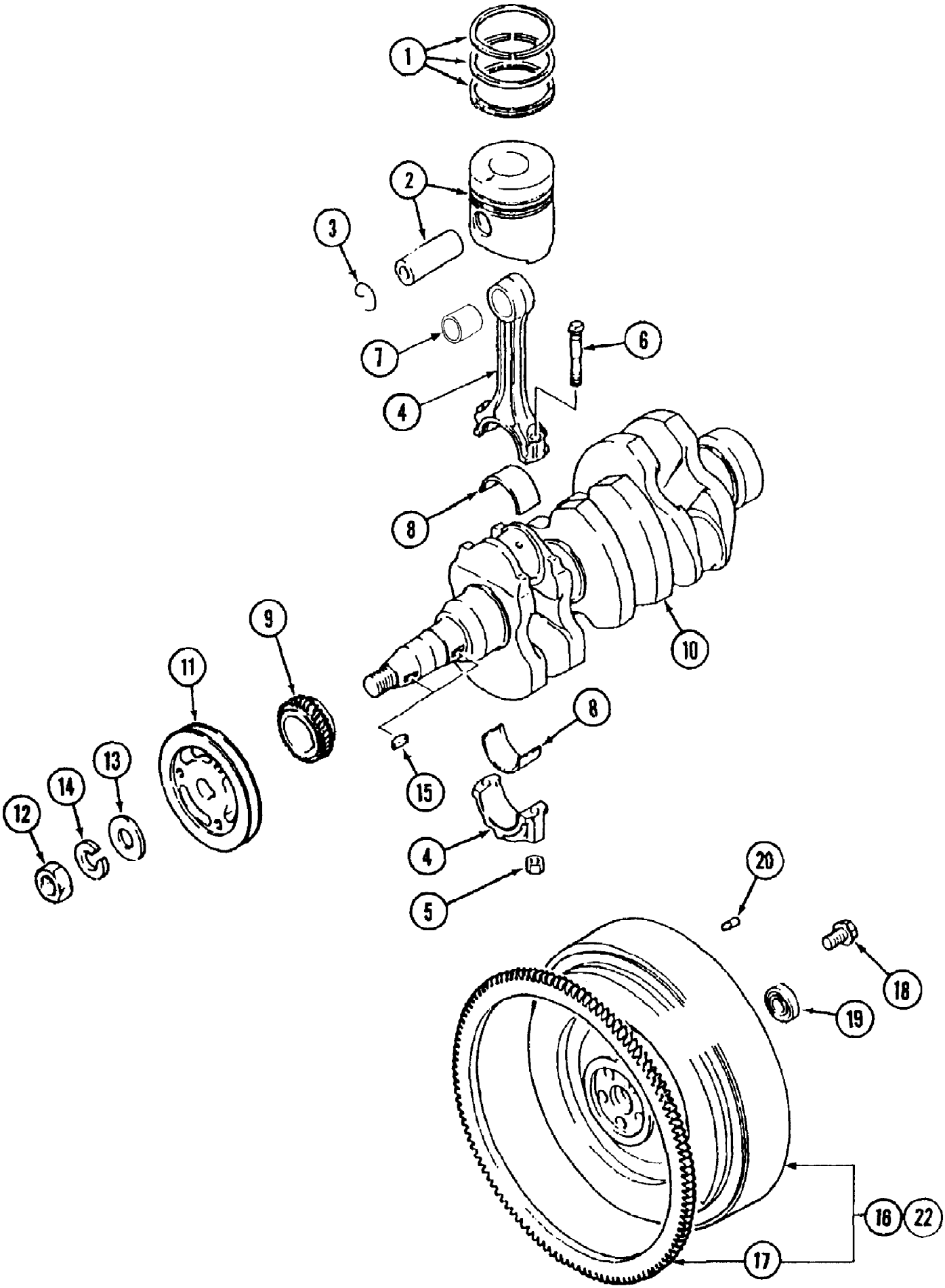

www.mymowerparts.com

For Discount Cub Cadet Parts Call 606-678-9623 or 606-561-4983

Main Moving Parts Single Clutch 30HP Engine 7300 S/N 21933 & Up

Ref #	Part Number	Qty	S/P/F	Description
1	MA-MM434512	3		Ring Set, Piston STD
	MA-MM435226	3		Ring Set, Piston 0.25 O. S.
	MA-MM435227	3		Ring Set, Piston 0.50 O. S.
	MA-MM435228	3		Ring Set, Piston 0.75 O. S.
2	MA-MM436772	3		Piston & Pin Set STD
	MA-MM436773	3		Piston & Pin Set 0.25 O. S.
	MA-MM436774	3		Piston & Pin Set 0.50 O. S
	MA-MM436775	3		Piston & Pin Set 0.75 O. S.
3	MA-MM300140	6		Clip, Piston Pin
4	MA-MM43843202	3	S	Rod Ass'y., Connecting Includes items 4-7
4		3		Connecting Rod & Cap
5	MA-MD006704	6		Nut, Connecting Rod
6	MA-MM412869	6		Bolt, Connection Rod
7		3		Bearing, Small End
8	MA-MM438669	3	S	Bearing Set, Con. Rod STD
	MA-MM438670	3	S	Bearing Set, Con. Rod 0.25 U. S.
	MA-MM438671	3	S	Bearing Set, Con. Rod 0.50 U. S.
	MA-MM438672	3		Bearing Set, Con. Rod 0.75 U. S.
9	MA-MM430859	1		Gear, Crankshaft
10	MA-MM41288601	1	S	Crankshaft
11	MA-30A20-00500	1		Pulley, Crankshaft
12	MA-MF430731	1	S	Nut, Jam
13	MA-MF450011	1		Washer, Plain
14	MA-MF450411	1	S	Washer, Spring
15	MA-MF476215	2		Key, Woodruff
16	MA-30H21-01061	1		Flywheel Ass'y.
17	MA-MD040556	1		Gear, Ring
18	MA-MD952231	5	S	Bolt, Drive Plate
19	MA-MD002613	1	S	Bearing, Ball
20	MA-MF472404	3		Pin, Dowel
22	MA-30H21-01051	1	/P	Flywheel Ass'y Not Used on this Model.

www.mymowerparts.com

For Discount Cub Cadet Parts Call 606-678-9623 or 606-561-4983

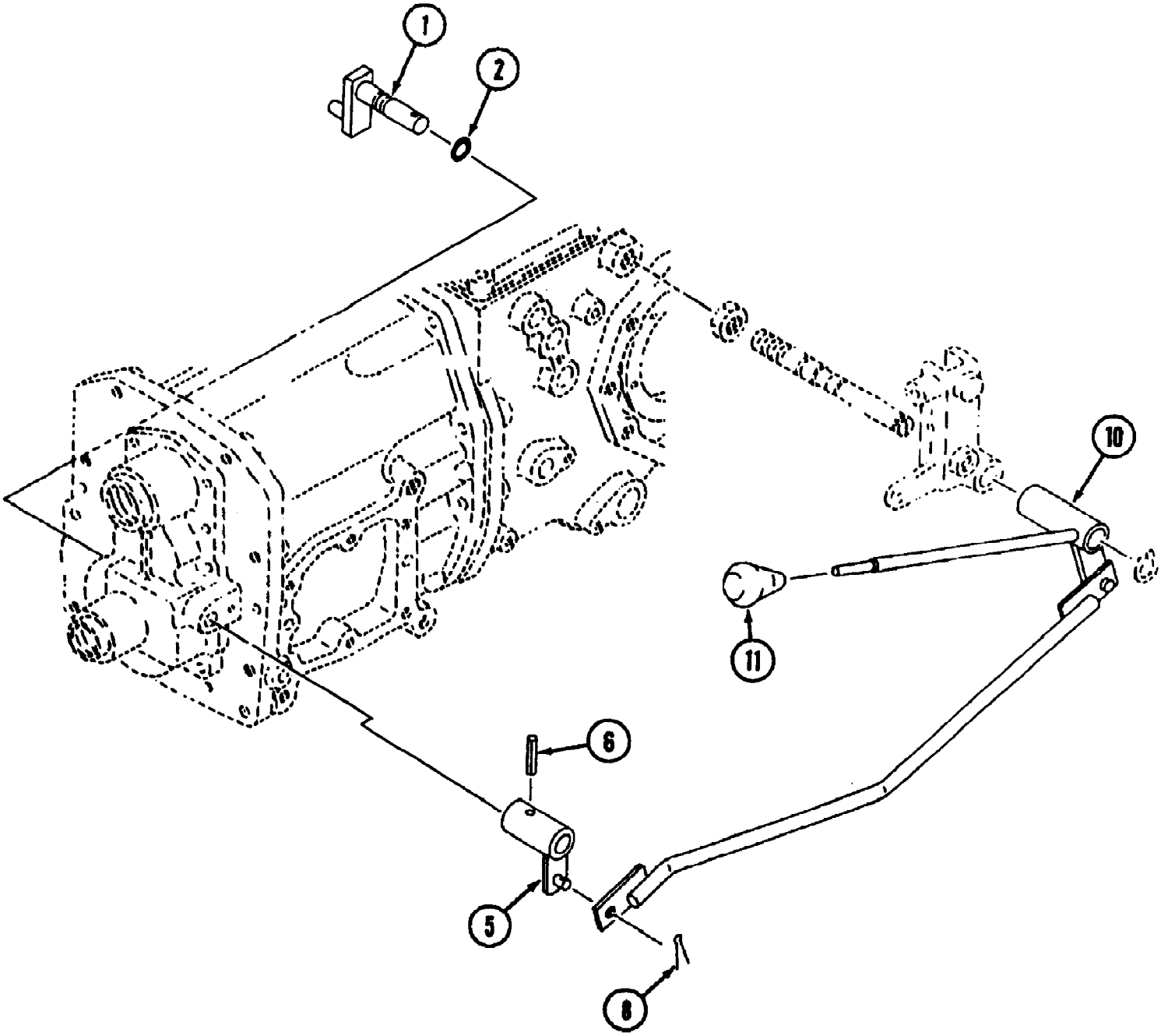

www.mymowerparts.com

For Discount Cub Cadet Parts Call 606-678-9623 or 606-561-4983

Ref #	Part Number	Qty	S/P/F	Description
1	MA-19631851000	1		Shifter, MFD
2	MA-08300100140	1		O-Ring
5	MA-19631853AG0	1		Arm, MFD
6	MA-10191734000	1		Pin
8	MA-05200125016	1	S	Pin, Split
10	MA-19641855AG0	1		Lever, MFD
11	MA-06960012360	1		Grip

www.mymowerparts.com

For Discount Cub Cadet Parts Call 606-678-9623 or 606-561-4983

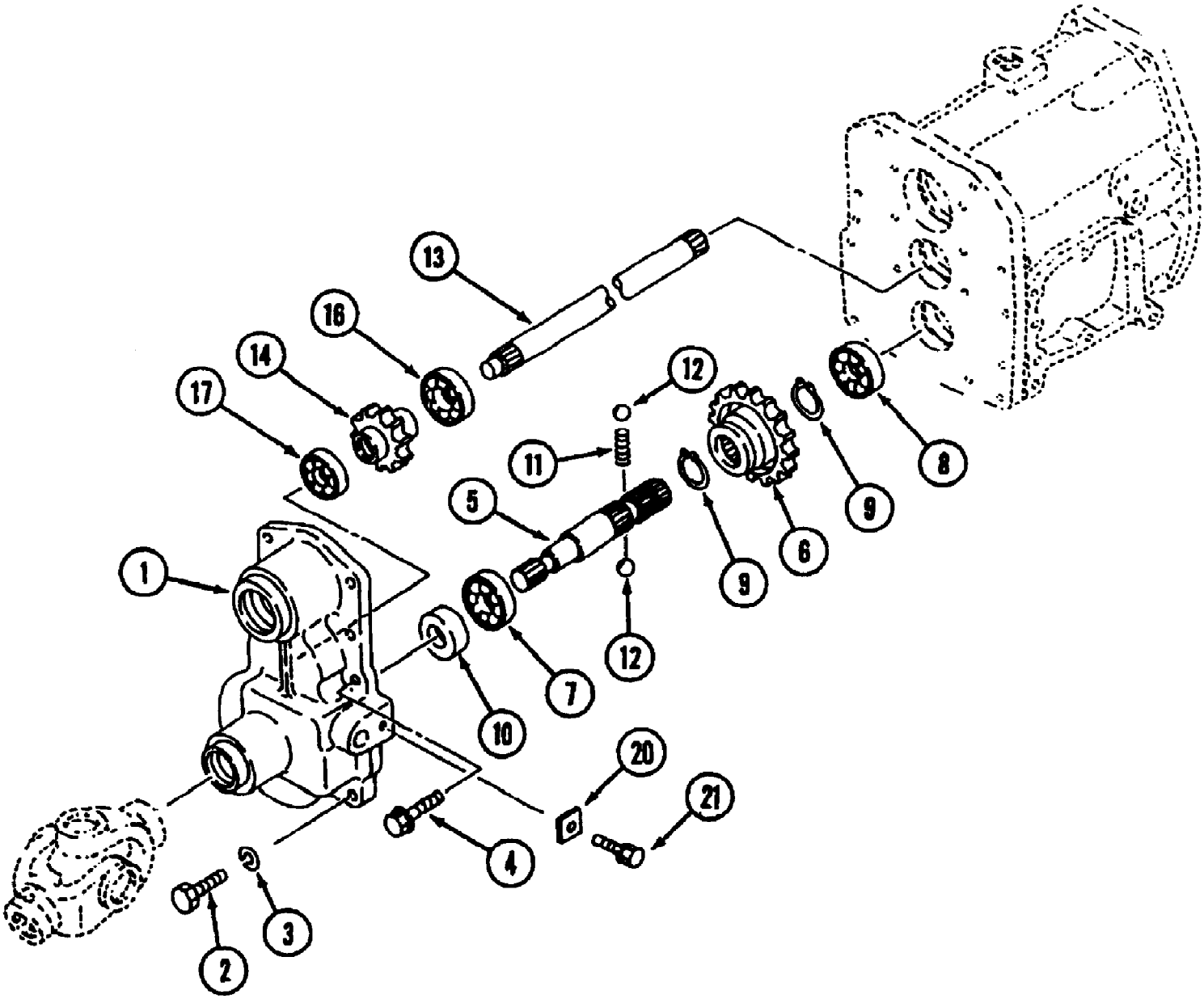

www.mymowerparts.com

For Discount Cub Cadet Parts Call 606-678-9623 or 606-561-4983

Ref #	Part Number	Qty	S/P/F	Description
1	MA-19641916AG0	1		Case, MFD
2	MA-69542-64700	2		Bolt
3	MA-A3600101002	2	/P	Washer
4	MA-F1550110030	6		Bolt
5	MA-19641918000	1		Shaft
6	MA-19641919000	1		Gear, 31T
7	MA-07500062040	1		Bearing
8	MA-07500063050	1		Bearing
9	MA-07400002500	2	/P	Ring
10	MA-08401020407	1		Seal, Oil
11	MA-10301916000	1		Spring
12	MA-08000000800	2		Ball
13	MA-19641921000	1		Shaft
14	MA-19641922000	1		Gear, 24T
16	MA-07500062060	1		Bearing
17	MA-07500062030	1		Bearing
20	MA-10251304000	1		Plate
21	MA-F1540108016	1		Bolt

www.mymowerparts.com

For Discount Cub Cadet Parts Call 606-678-9623 or 606-561-4983

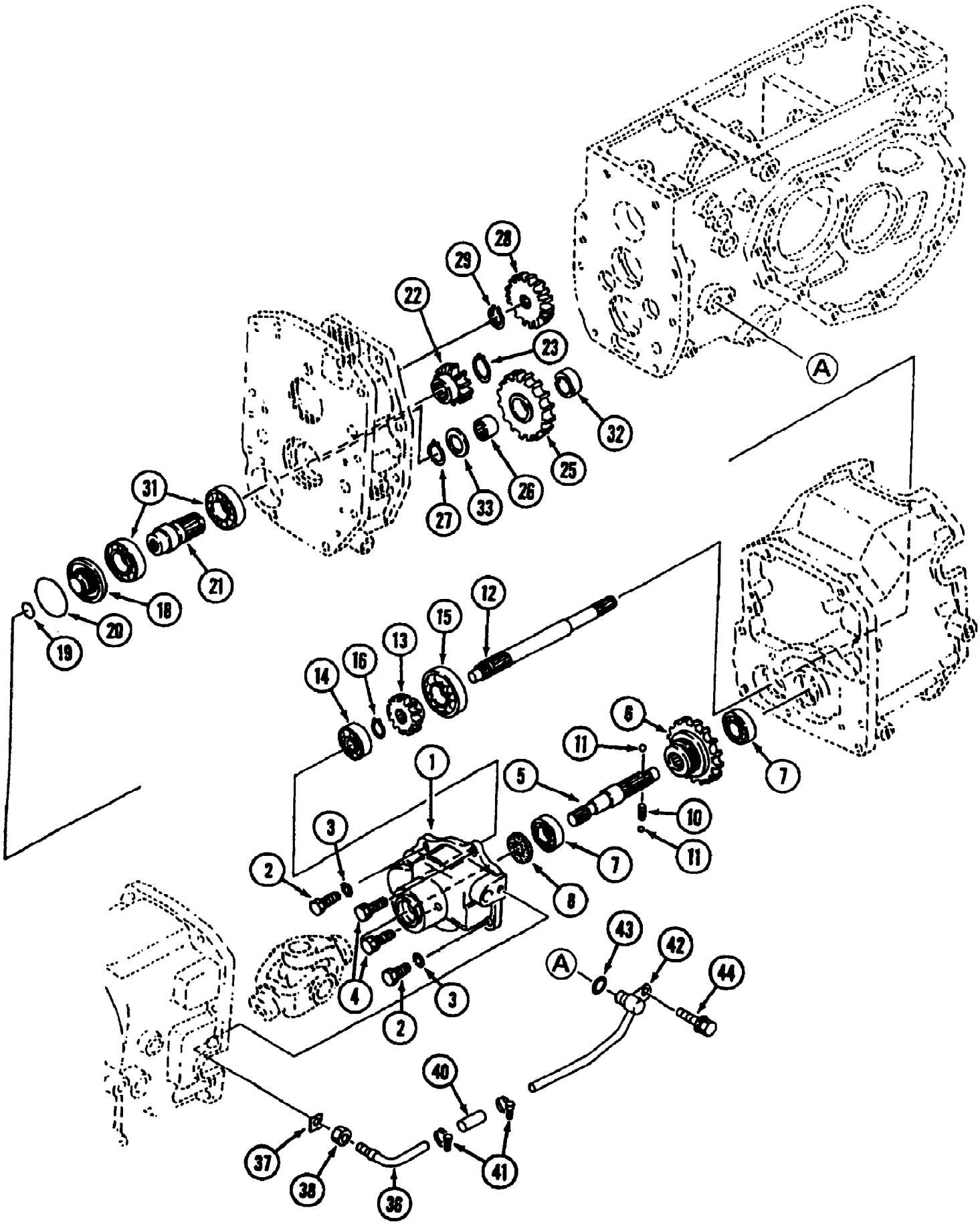

www.mymowerparts.com

For Discount Cub Cadet Parts Call 606-678-9623 or 606-561-4983

Ref #	Part Number	Qty	S/P/F	Description
1	MA-19641917AG0	1		Case, MFD
2	MA-69542-64700	2		Bolt
3	MA-A3600101002	2	/P	Washer
4	MA-F1550110030	2		Bolt
5	MA-19631918000	1		Shaft
6	MA-19641919000	1		Gear, 31T
7	MA-07500062040	2		Bearing
8	MA-08401020407	1		Seal, Oil
10	MA-10301916000	1		Spring
11	MA-08000000800	2		Ball
12	MA-19641923000	1		Shaft
13	MA-19641924000	1		Gear, 16T
14	MA-07500063030	1		Bearing
15	MA-07500062060	1		Bearing
16	MA-07400002000	1		Ring
18	MA-19631926000	1		Holder
19	MA-08300500260	1		O-Ring
20	MA-08300500560	1		O-Ring
21	MA-19641927000	1		Joint
22	MA-19641928000	1		Gear, 16T
23	MA-07400003000	1	/P	Ring
25	MA-19641929000	1		Gear,31T
26	MA-07802253020	1		Bearing
27	MA-07400002500	1	/P	Ring
28	MA-19641931000	1		Gear, 24T
29	MA-07400002000	1		Ring
31	MA-07500062060	2		Bearing
32	MA-19641932000	1		Collar
33	MA-10301328000	1		Liner
36	MA-19631971AG0	1		Pipe A
37	MA-19631974000	1		Plate
38	MA-A3030112002	1		Nut
40	MA-19631972000	1		Hose
41	MA-00501100200	2		Clamp
42	MA-19641973AG0	1		Pipe B
43	MA-08301100160	1		O-Ring
44	MA-H1550110020	1		Bolt

www.mymowerparts.com

For Discount Cub Cadet Parts Call 606-678-9623 or 606-561-4983

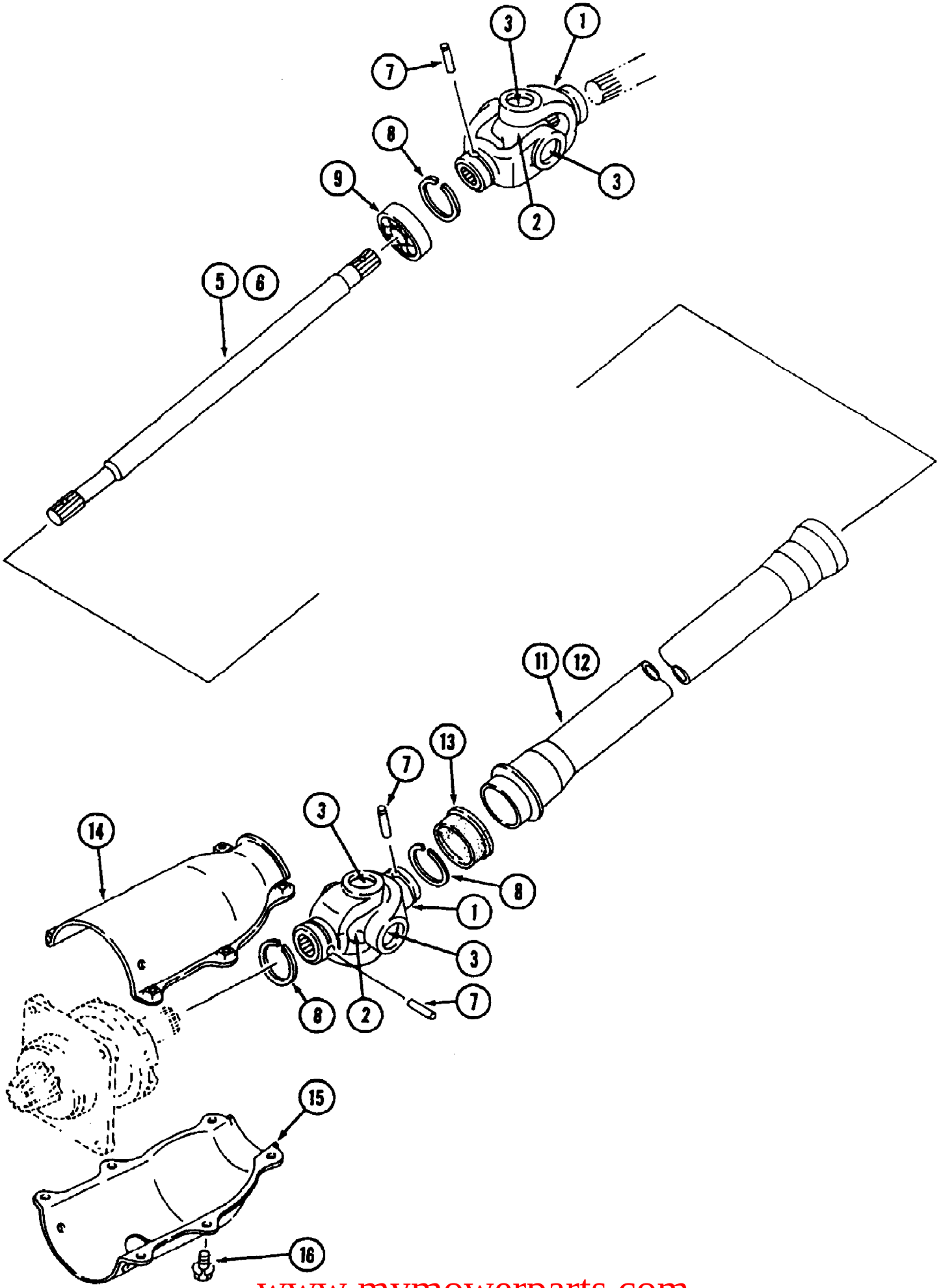

www.mymowerparts.com

For Discount Cub Cadet Parts Call 606-678-9623 or 606-561-4983

Ref #	Part Number	Qty	S/P/F	Description
	MA-10070552000	2		Joint, Ass'y. Includes Items 1 - 3
1	MA-10070552100	4		Spline, York
2	MA-10070552200	2		Tournal Kit
3	MA-07410002000	8	/P	Ring, Snap
5		1		Shaft Not used on this product
6	MA-19641912AG0	1		Shaft
7	MA-05401006028	3		Pin, Dowel
8	MA-10070553001	3		Ring, Snap
9	MA-07500560044	1		Bearing
11		1		Cover Not used on this product
12	MA-19641914AG0	1		Cover
13	MA-19061916000	1		Cushion
14	MA-10070554AG1	1		Cover, Upper
15	MA-10070556AG1	1		Cover, Lower
16	MA-H1440106012	8		Bolt

www.mymowerparts.com

For Discount Cub Cadet Parts Call 606-678-9623 or 606-561-4983

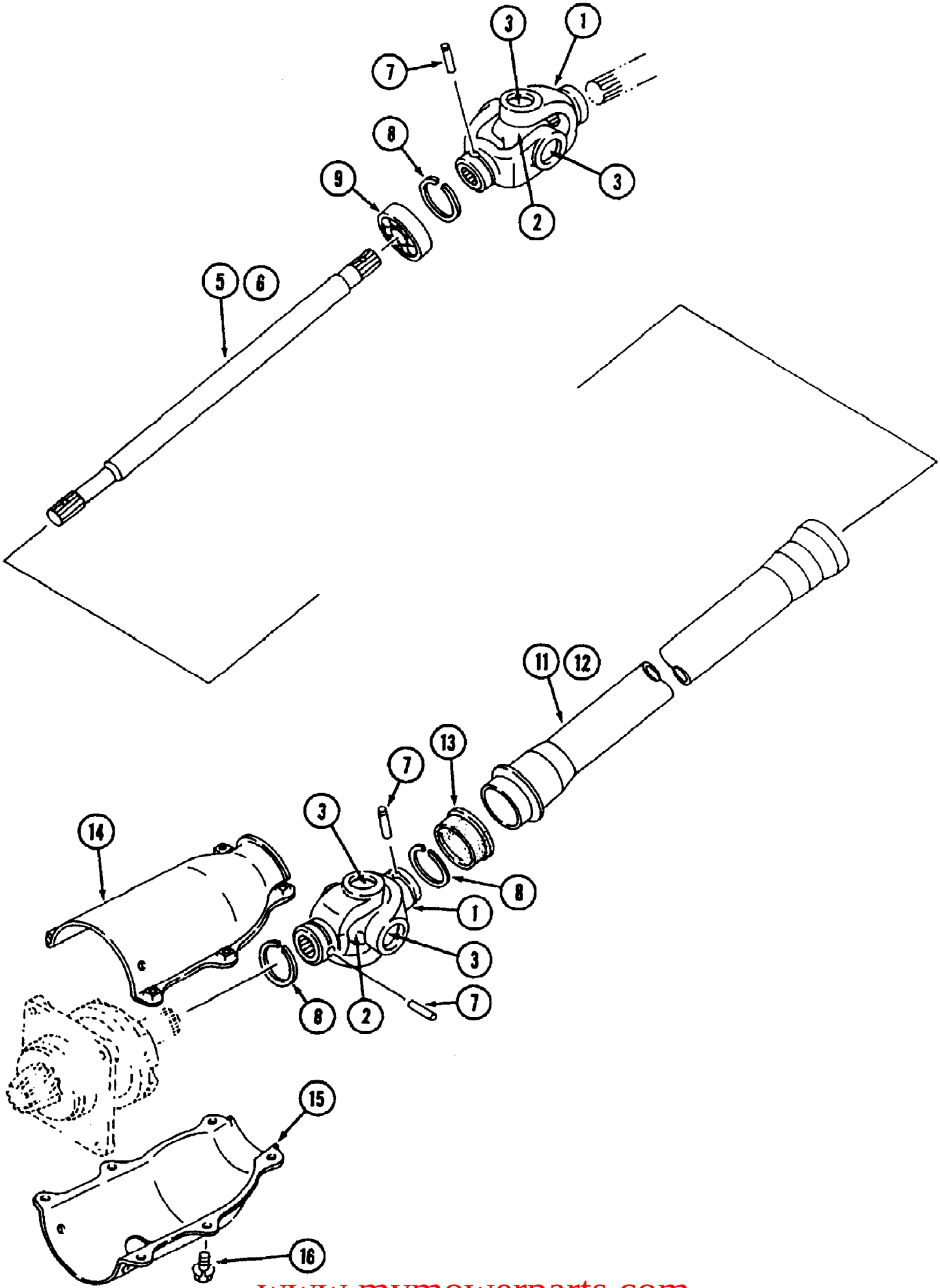

www.mymowerparts.com

For Discount Cub Cadet Parts Call 606-678-9623 or 606-561-4983

Ref #	Part Number	Qty	S/P/F	Description
	MA-10070552000	2		Joint, Ass'y. Includes Items 1 - 3
1	MA-10070552100	4		Spline, York
2	MA-10070552200	2		Tournal Kit
3	MA-07410002000	8	/P	Ring, Snap
5		1		Shaft Not used on this product
6	MA-19641912AG0	1		Shaft
7	MA-05401006028	3		Pin, Dowel
8	MA-10070553001	3		Ring, Snap
9	MA-07500560044	1		Bearing
11		1		Cover Not used on this product
12	MA-19641914AG0	1		Cover
13	MA-19061916000	1		Cushion
14	MA-10070554AG1	1		Cover, Upper
15	MA-10070556AG1	1		Cover, Lower
16	MA-H1440106012	8		Bolt

www.mymowerparts.com

For Discount Cub Cadet Parts Call 606-678-9623 or 606-561-4983

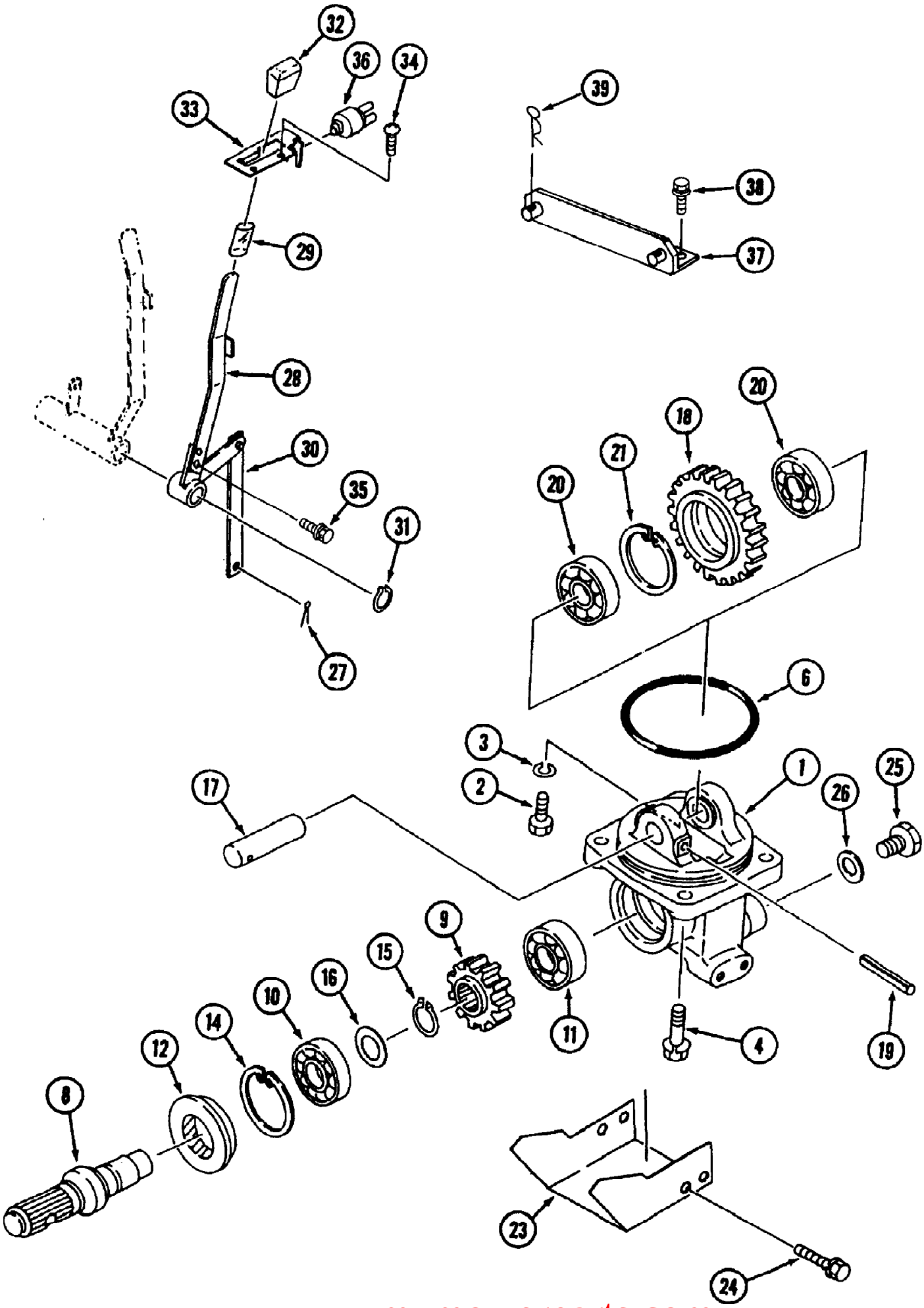

www.mymowerparts.com

For Discount Cub Cadet Parts Call 606-678-9623 or 606-561-4983

Ref #	Part Number	Qty	S/P/F	Description
1	MA-12181232AG0	1		Case, Mid PTO
2	MA-19803186000	1		Bolt
3	MA-A3600101202	1		Washer
4	MA-F1540112035	3		Bolt
6	MA-08300201100	1		O-Ring
8	MA-19631603000	1		Shaft
9	MA-12181233000	1		Gear, 25T
10	MA-07500062050	1		Bearing
11	MA-07500063040	1		Bearing
12	MA-08412355212	1		Seal, Oil
14	MA-07410005201	1	/P	Ring
15	MA-07400002500	1	/P	Ring
16	MA-13521608000	1		Liner
17	MA-19871852000	1		Shaft A
18	MA-12181234000	1		Gear, 37T
19	MA-05500005050	1		Pin, Spring
20	MA-07500063040	2		Bearing
21	MA-07410005201	1	/P	Ring
23	MA-19631607AG0	1		Cover
24	MA-H1540108016	4		Bolt
25	MA-F5000-16000	1		Plug
26	MA-08331001600	1		Seal, Washer
27	MA-05200125016	1	S	Pin, Split
		1		Lever, Mid Ass'y. (NSS)
28	MA-12181236AG0	1		Lever, Mid PTO
29	MA-19631658000	1		Tube
30	MA-12181237AG0	1		Lever, Mid PTO
31	MA-07400102000	1		Ring
32	MA-19061731000	1		Grip
33	MA-19641658AG0	1		Plate, Mid PTO
34	MA-A2520706012	2		Screw
35	MA-H1540108016	2		Bolt
36	MA-10253505001	1	/P	Switch
37	MA-19633105AG0	1		Bracket, Drawbar
38	MA-H1540108020	2		Bolt
39	MA-05210116000	2		Pin Snap

www.mymowerparts.com

For Discount Cub Cadet Parts Call 606-678-9623 or 606-561-4983

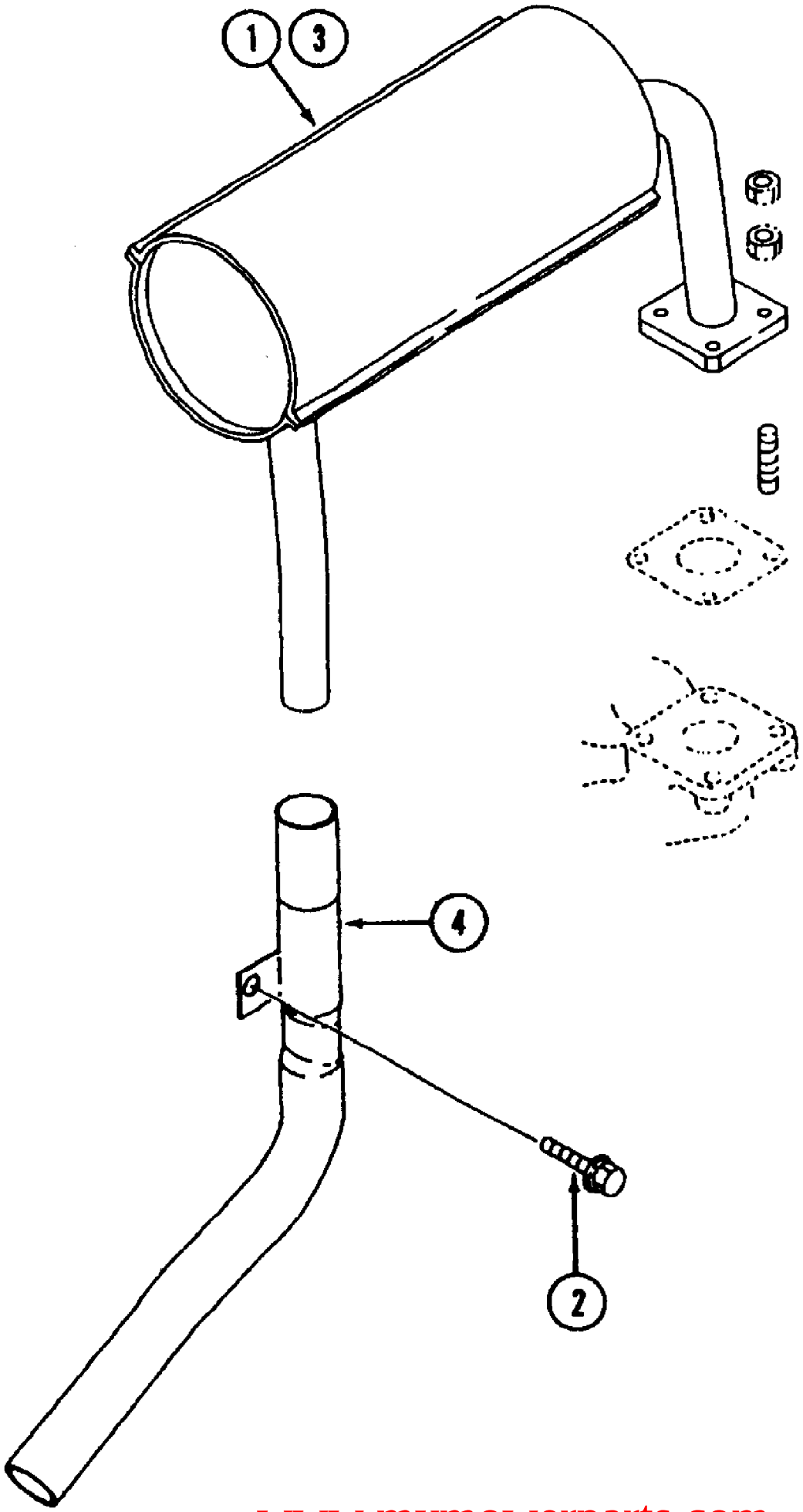

www.mymowerparts.com

For Discount Cub Cadet Parts Call 606-678-9623 or 606-561-4983

Ref #	Part Number	Qty	S/P/F	Description
1		1		Muffler Not used on this product
2	MA-H1840108020	1		Bolt
3	MA-196403120K0	1		Muffler
4	MA-196803160K0	1	/P	Pipe, Tail

www.mymowerparts.com

For Discount Cub Cadet Parts Call 606-678-9623 or 606-561-4983

Nozzle & Holder 30 HP Engine (7300 SN 21932-Lower/7305 SN 23069-Lower)

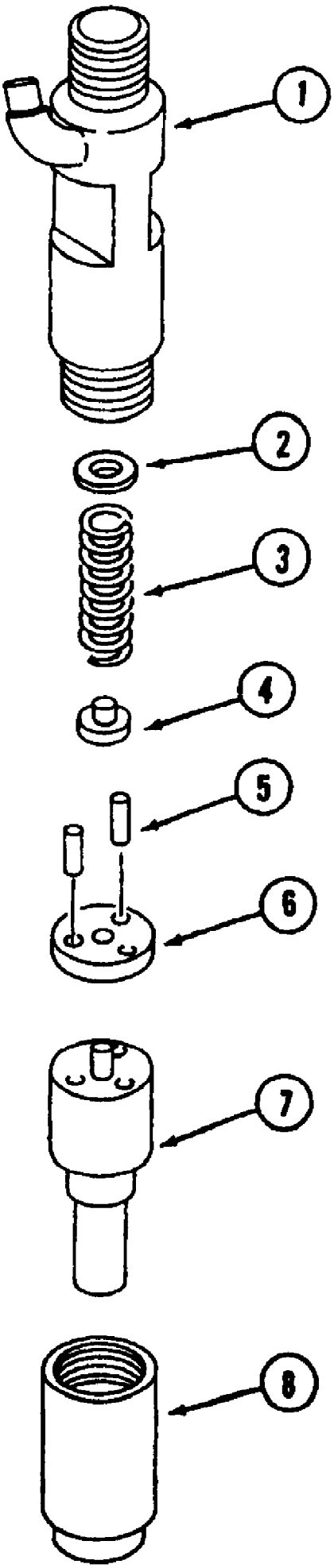

www.mymowerparts.com

For Discount Cub Cadet Parts Call 606-678-9623 or 606-561-4983

Nozzle & Holder 30 HP Engine (7300 SN 21932-Lower/7305 SN 23069-Lower)

Ref #	Part Number	Qty	S/P/F	Description
	MA-30A61-00500	3		Nozzle Ass'y. Includes Items 1 - 8
1	MA-09311-04510	3		Body Sub Ass'y.
2	MA-09317-52180	AR		Washer T=1.00
	MA-09317-52190	AR	/P	Washer T=1.05
	MA-09317-52200	AR	/P	Washer T=1.10
	MA-09317-52210	AR	/P	Washer T=1.15
	MA-09317-52220	AR	/P	Washer T=1.20
	MA-09317-52230	AR	/P	Washer T=1.25
	MA-09317-52240	AR	/P	Washer T=1.30
	MA-09317-52250	AR	/P	Washer T=1.35
	MA-09317-52260	AR	/P	Washer T=1.40
	MA-09317-52270	AR	/P	Washer T=1.45
	MA-09317-52280	AR	/P	Washer T=1.50
	MA-09317-52290	AR	/P	Washer T=1.55
	MA-09317-52300	AR	/P	Washer T=1.60
	MA-09317-52310	AR	/P	Washer T=1.65
	MA-09317-52320	AR	/P	Washer T=1.70
	MA-09317-52330	AR	/P	Washer T=1.75
	MA-09317-52340	AR		Washer T=1.80
	MA-09317-52350	AR	/P	Washer T=1.85
	MA-09317-52360	AR	/P	Washer T=1.90
	MA-09317-52370	AR	/P	Washer T=1.95
	MA-09317-52380	AR	/P	Washer T=2.00
	MA-09317-52390	AR	/P	Washer T=2.05
	MA-09317-52400	AR	/P	Washer T=2.10
	MA-09317-52410	AR		Washer T=2.15
	MA-09317-52420	AR	/P	Washer T=1.275
	MA-09317-52430	AR	/P	Washer T=1.325
	MA-09317-52440	AR	/P	Washer T=1.375
	MA-09317-52450	AR	/P	Washer T=1.425
	MA-09317-52460	AR	/P	Washer T=1.475
	MA-09317-52470	AR	/P	Washer T=1.525
	MA-09317-52480	AR	/P	Washer T=1.575
	MA-09317-52490	AR	/P	Washer T=1.625
	MA-09317-52500	AR	/P	Washer T=1.675
	MA-09317-52510	AR	/P	Washer T=1.725
	MA-09317-52520	AR	/P	Washer T=1.775
	MA-09317-52530	AR		Washer T=0.95
3	MA-09312-70410	3	/P	Spring, Pressure
4	MA-09312-10480	3		Pin, Pressure
5	MA-94908-23160	6	S	Pin, Straight
6	MA-09322-10150	3	/P	Packing, Tip
7	MA-09322-05730	3		Nozzle Ass'y.
8	MA-09316-41020	3	/P	Nut, Nozzle Retaining

www.mymowerparts.com

For Discount Cub Cadet Parts Call 606-678-9623 or 606-561-4983

Nozzle & Nozzle Holder 30HP Engine 7300 S/N 21933 & Up

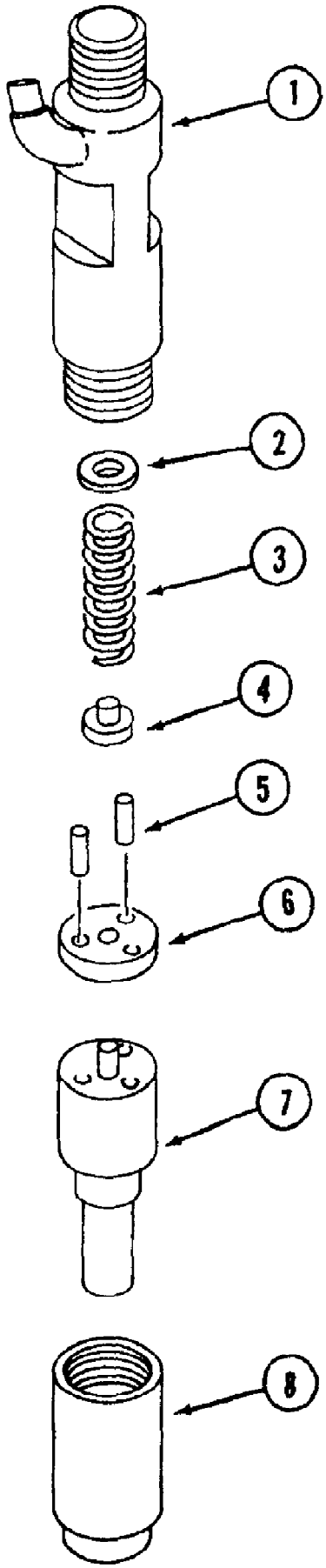

www.mymowerparts.com

For Discount Cub Cadet Parts Call 606-678-9623 or 606-561-4983

Nozzle & Nozzle Holder 30HP Engine 7300 S/N 21933 & Up

Ref #	Part Number	Qty	S/P/F	Description
	MA-MM438767	3		Nozzle & Holder Ass'y. Includes items 1-8
1	MA-09311-04330	3		Body Sub Ass'y.
2	MA-09317-52180	AR		Washer t=1.00
	MA-09317-52190	AR	/P	Washer t=1.05
	MA-09317-52200	AR	/P	Washer t=1.10
	MA-09317-52210	AR	/P	Washer t=1.15
	MA-09317-52220	AR	/P	Washer t=1.20
	MA-09317-52230	AR	/P	Washer t=1.25
	MA-09317-52240	AR	/P	Washer t=1.30
	MA-09317-52250	AR	/P	Washer t=1.35
	MA-09317-52260	AR	/P	Washer t=1.40
	MA-09317-52270	AR	/P	Washer t=1.45
	MA-09317-52280	AR	/P	Washer t=1.50
	MA-09317-52290	AR	/P	Washer t=1.55
	MA-09317-52300	AR	/P	Washer t=1.60
	MA-09317-52310	AR	/P	Washer t=1.65
	MA-09317-52320	AR	/P	Washer t=1.70
	MA-09317-52330	AR	/P	Washer t=1.75
	MA-09317-52340	AR		Washer t=1.80
	MA-09317-52350	AR	/P	Washer t=1.85
	MA-09317-52360	AR	/P	Washer t=1.90
	MA-09317-52370	AR	/P	Washer t=1.65
	MA-09317-52380	AR	/P	Washer t=2.00
	MA-09317-52390	AR	/P	Washer t=2.05
	MA-09317-52400	AR	/P	Washer t=2.10
	MA-09317-52410	AR		Washer t=2.15
	MA-09317-52420	AR	/P	Washer t=1.275
	MA-09317-52430	AR	/P	Washer t=1.325
	MA-09317-52440	AR	/P	Washer t=1.375
	MA-09317-52450	AR	/P	Washer t=1.425
	MA-09317-52460	AR	/P	Washer t=1.475
	MA-09317-52470	AR	/P	Washer t=1.525
	MA-09317-52480	AR	/P	Washer t=1.575
	MA-09317-52490	AR	/P	Washer t=1.625
	MA-09317-52500	AR	/P	Washer t=1.675
	MA-09317-52510	AR	/P	Washer t=1.725
	MA-09317-52520	AR	/P	Washer t=1.775
	MA-09317-52530	AR		Washer t=0.95
3	MA-09312-70410	3	/P	Spring, Pressure
4	MA-09312-10480	3		Pin, Pressure
5	MA-94908-23160	6	S	Pin, Straight
6	MA-09322-10150	3	/P	Packing, Tip
7	MA-09340-05730	3	/P	Nozzle Ass'y.
8	MA-09316-41020	3	/P	Nut, Nozzle Retaining

www.mymowerparts.com

For Discount Cub Cadet Parts Call 606-678-9623 or 606-561-4983

Oil Pan & Gear Case 30HP Eng (7300 SN 21932-Lower/7305 SN 23069-Lower)

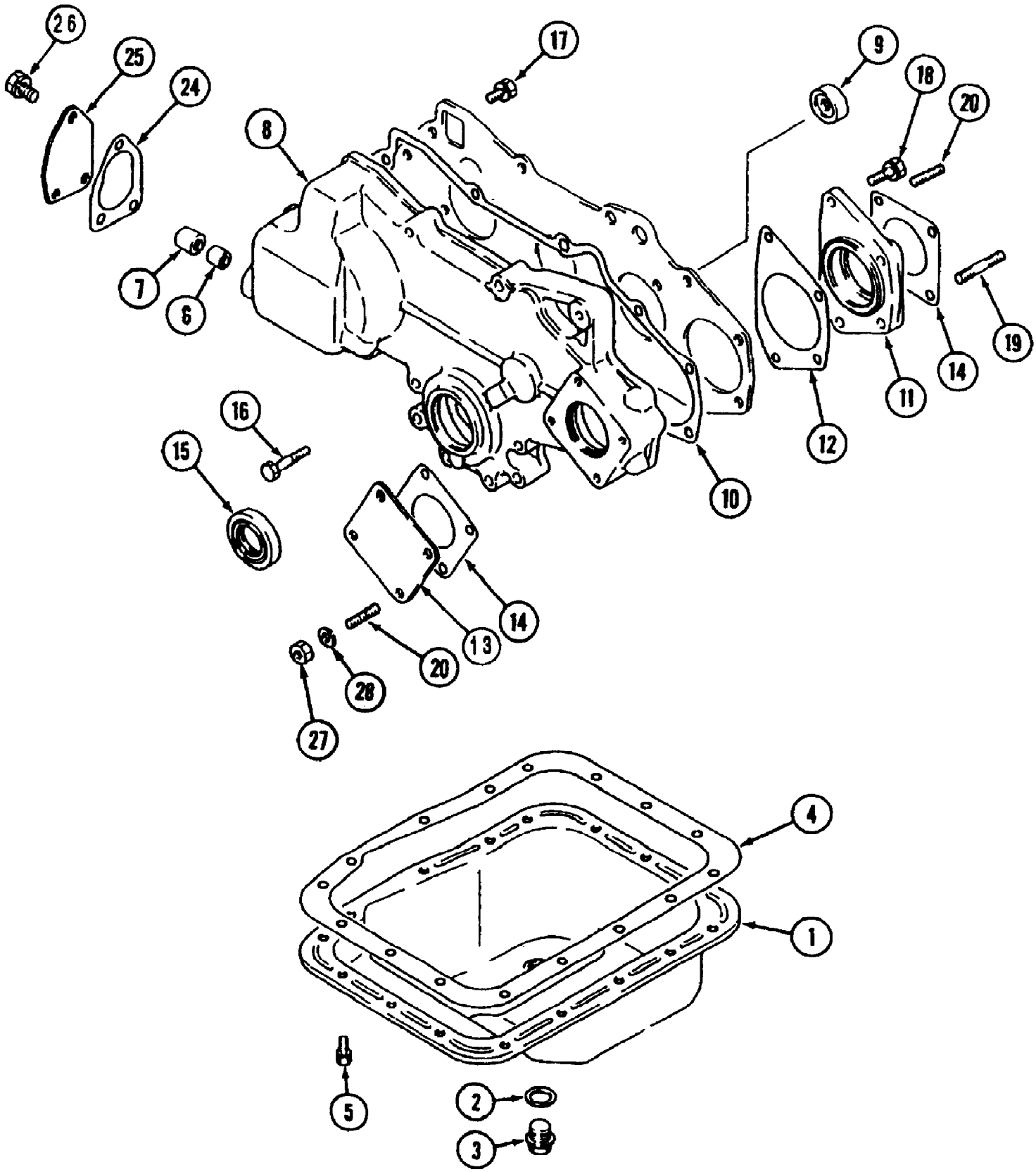

www.mymowerparts.com

For Discount Cub Cadet Parts Call 606-678-9623 or 606-561-4983

Oil Pan & Gear Case 30HP Eng (7300 SN 21932-Lower/7305 SN 23069-Lower)

Ref #	Part Number	Qty	S/P/F	Description
1	MA-MM435538	1		Pan Ass'y., Oil
2	MA-MD000312	1		Gasket, Oil Drain Plug
3	MA-MD000318	1		Plug, Oil Drain
4	MA-30H13-00101	1		Gasket, Oil Pan
5	MA-MF240051	16		Bolt, W/Washer
6	MA-MM406420	1		Bearing, Needle
7	MA-MM406421	1		Bearing, Needle
8	MA-MM43722603	1	/P	Case, Gear
9	MA-MM409718	1		Plug, Thrust
10	MA-30H11-00201	1	S	Gasket, Gear Case
11	MA-30H11-00400	1	S	Housing, Pump Gear Bearing
12	MA-30H11-00101	1	/P	Gasket, Housing
14	MA-30A11-00101	2		Gasket, Oil Pump Cover
13	MA-MM401205	1	S	Cover, Oil Pump
15	MA-MD008762	1		Oil Seal
16	MA-MF100064	10		Bolt
17	MA-MF240051	2		Bolt, W/Washer
18	MA-MF241255	2		Bolt, W/Washer
19	MA-MS401434	2		Stud
20	MA-MS401426	6		Stud
24	MA-30A11-00301	1	S	Gasket, Governor Cover
25	MA-MM408233	1		Cover, Governor
26	MA-MF240051	3		Bolt, W/Washer
27	MA-MF430005	4		Nut
28	MA-MF450405	4		Washer, Spring

www.mymowerparts.com

For Discount Cub Cadet Parts Call 606-678-9623 or 606-561-4983

Oil Pan & Gear Case 30HP Engine 7300 S/N 21933 & Up

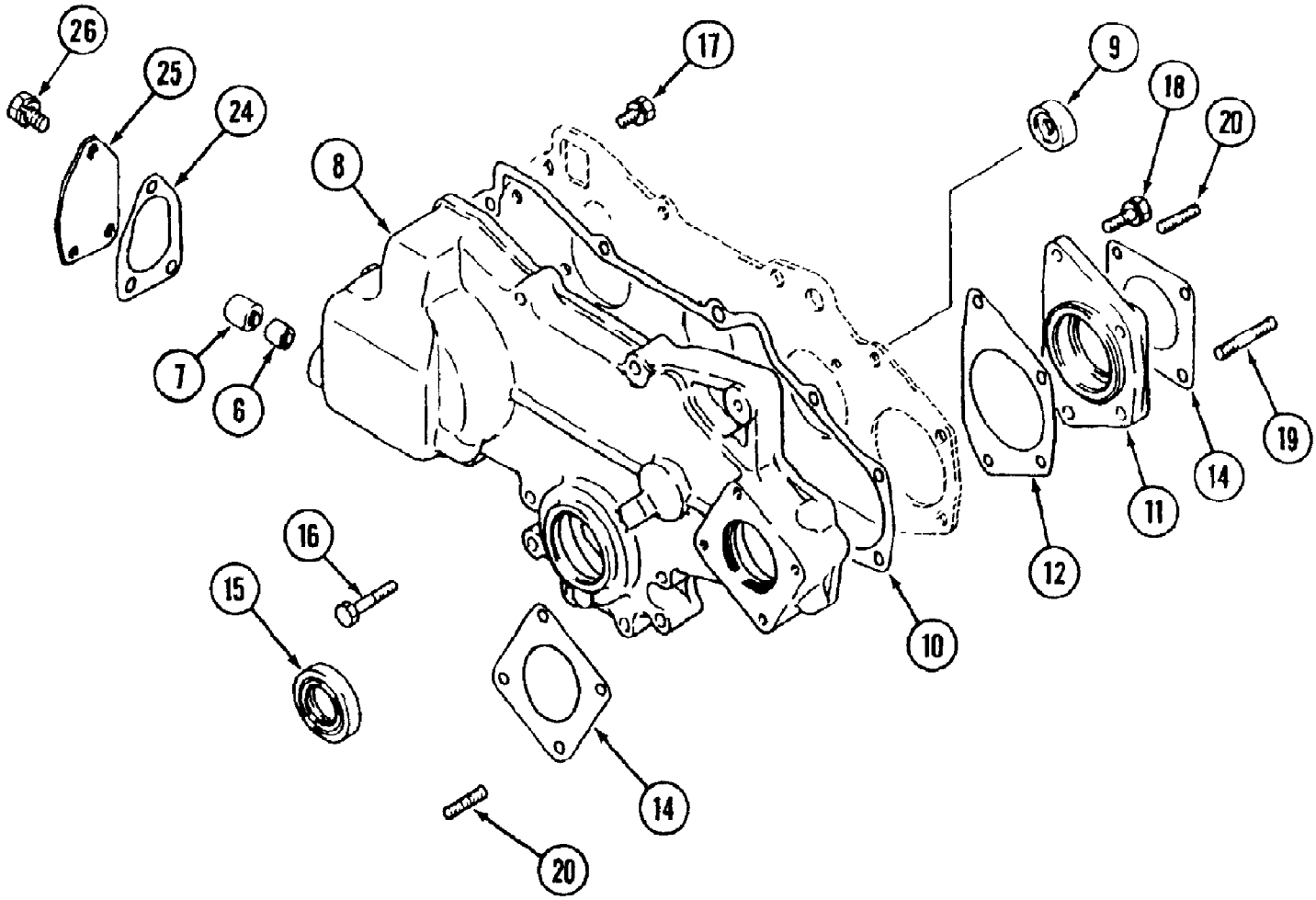

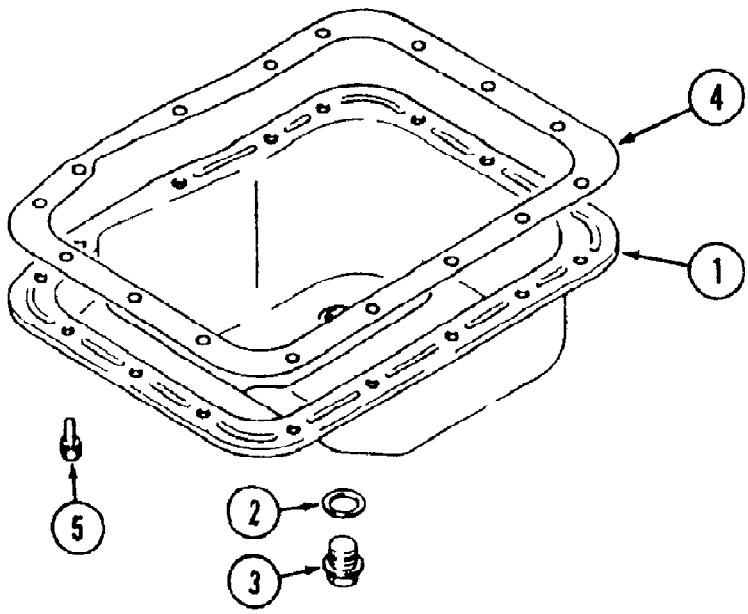

www.mymowerparts.com

For Discount Cub Cadet Parts Call 606-678-9623 or 606-561-4983

Oil Pan & Gear Case 30HP Engine 7300 S/N 21933 & Up

Ref #	Part Number	Qty	S/P/F	Description
1	MA-MM435538	1		Pan Ass'y., Oil Includes items 1-3
2	MA-MD000312	1		Gasket
3	MA-MD000318	1		Plug
4	MA-30H13-00101	1		Gasket, Oil Pan
5	MA-MF240051	16		Bolt, w/Washer
6	MA-MM406420	1		Bearing, Needle
7	MA-MM406421	1		Bearing, Needle
8	MA-MM43722603	1	/P	Case, Gear
9	MA-MM409718	1		Plug
10	MA-30H11-00201	1	S	Gasket, Gear Case
11	MA-30H11-00401	1	/P	Housing, Gear Pump
12	MA-30H11-00101	1	/P	Gasket, Housing
14	MA-30A11-00101	2		Gasket, Oil Pump Cover
15	MA-MD008762	1		Oil Seal
16	MA-MF100064	10		Bolt
17	MA-MF240051	2		Bolt, w/Washer
18	MA-MF241255	2		Bolt, w/Washer
19	MA-MS401434	2		Stud
20	MA-MS401426	6		Stud
24	MA-30A11-00301	1	S	Gasket, Governor Cover
25	MA-MM408233	1		Cover, Governor
26	MA-MF240051	3		Bolt, w/Washer

www.mymowerparts.com

For Discount Cub Cadet Parts Call 606-678-9623 or 606-561-4983

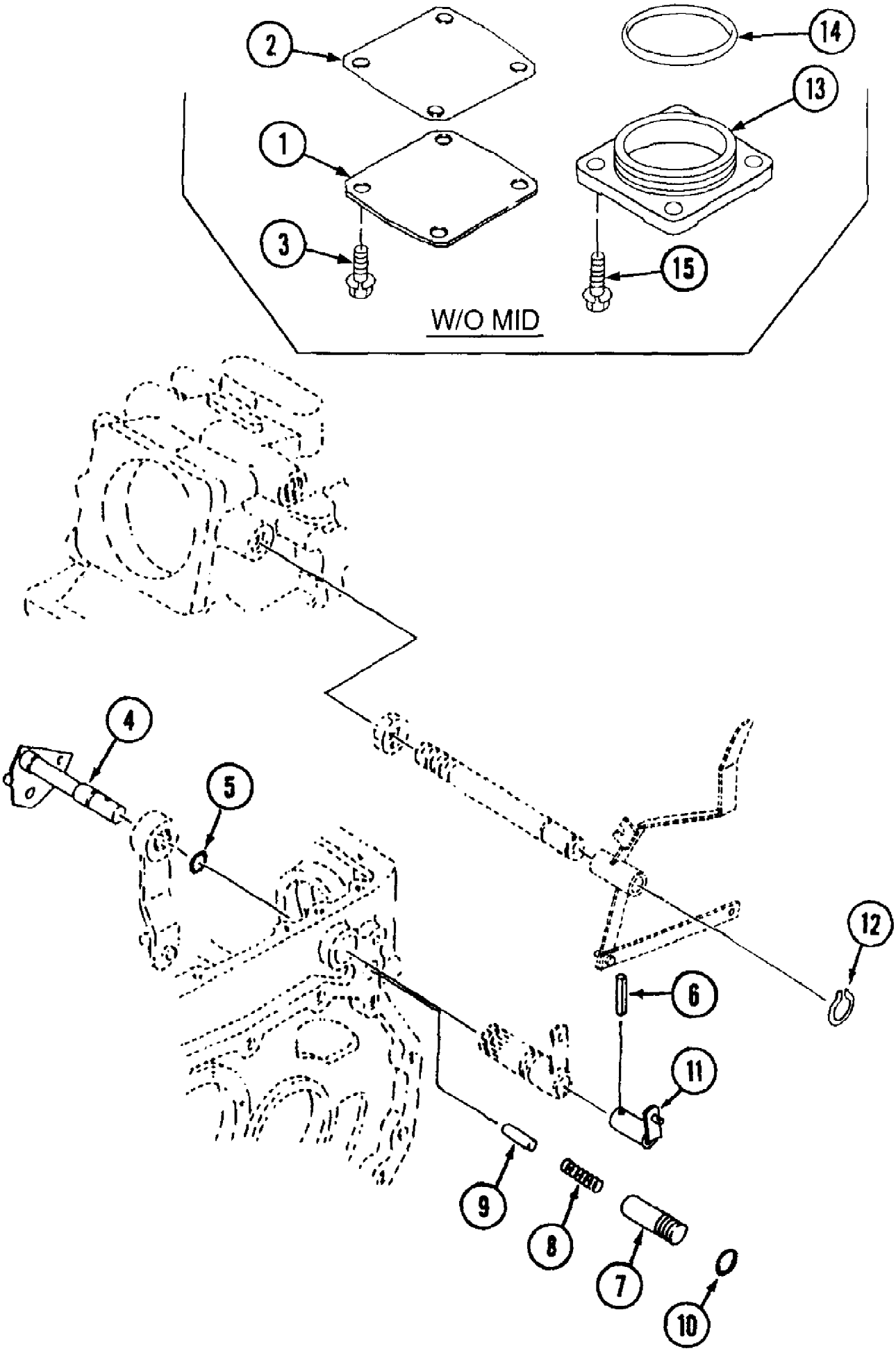

www.mymowerparts.com

For Discount Cub Cadet Parts Call 606-678-9623 or 606-561-4983

Ref #	Part Number	Qty	S/P/F	Description
1	MA-19641602AG2	1	S/F	Cover
2	MA-19681612000	1	F	Gasket
3	MA-F1540112025	4	F	Bolt
4	MA-19631651000	1		Shifter, Mid
5	MA-08301100120	1	/P	O-Ring
6	MA-10191734000	1		Pin, Spring
7	MA-19631652000	1		Boss
8	MA-67428-01700	1		Spring
9	MA-11741737000	1		Pin
10	MA-08300100160	1	/P	O-Ring
11	MA-19641654AG0	1		Arm, Mid
12	MA-07400102000	1		Ring
13	MA-19681601AG0	1	/P/F	Cover
14	MA-08300201100	1	F	Ring Used with MA-19681601AG0 Cover Only.
15	MA-F1540112035	4	F	Bolt Used with MA-19681601AG0 Cover Only.

www.mymowerparts.com

For Discount Cub Cadet Parts Call 606-678-9623 or 606-561-4983

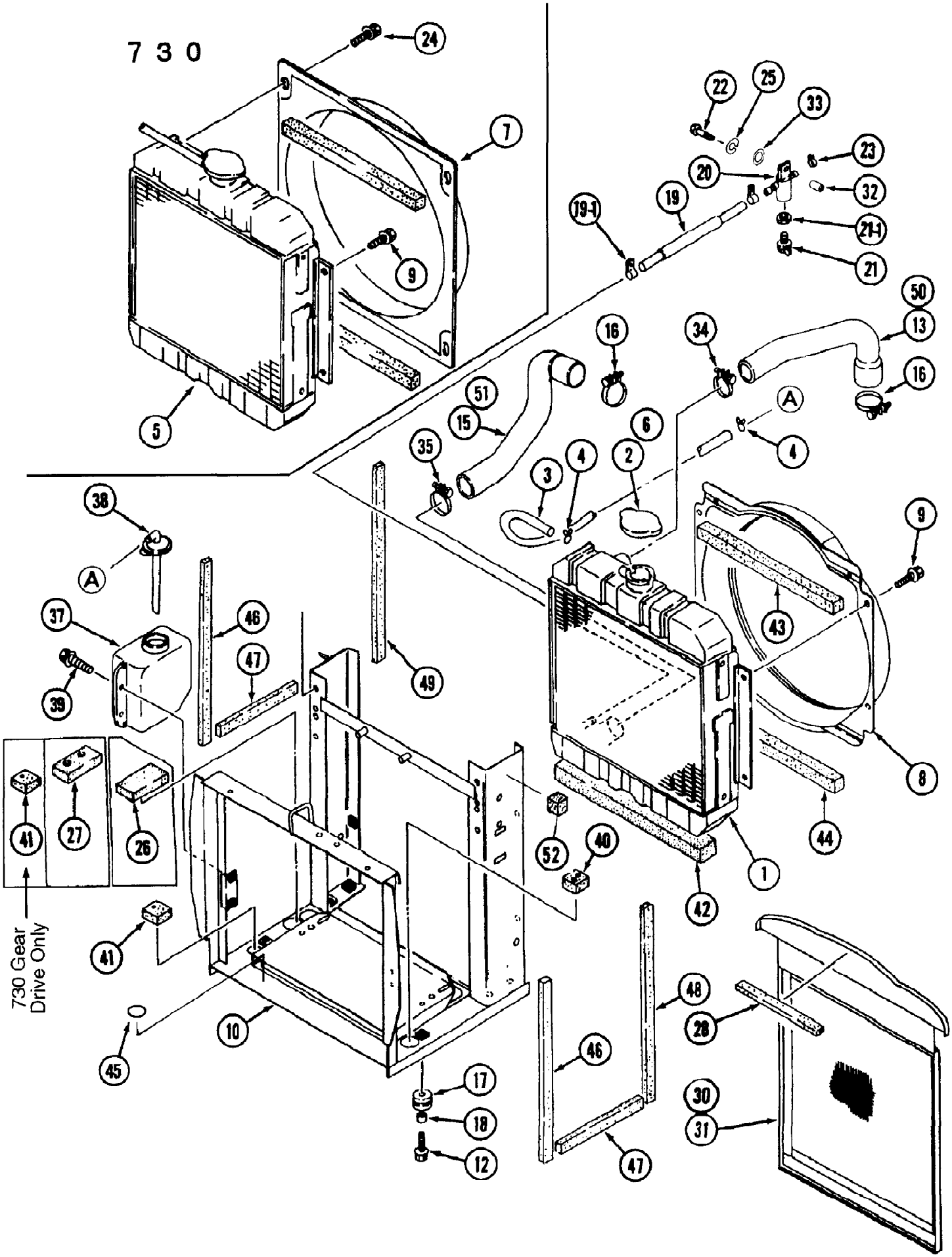

www.mymowerparts.com

For Discount Cub Cadet Parts Call 606-678-9623 or 606-561-4983

Ref #	Part Number	Qty	S/P/F	Description
		1		Radiator Includes Items 1-4; Not used on this product
1		1		Body, Radiator Not used on this product
2		1		Cap Not used on this product
	MA-19640412000	1	/P	Radiator Includes Items 3 - 7 & 24
3	MA-19640411200	1		Hose
4	MA-68201-01814	2		Clip
5	MA-19640412100	1	S	Body, Radiator
6	MA-68201-01813	1		Cap
7	MA-19080411200	1		Shroud, Fan
8		1		Shroud, Fan Not used on this product
9	MA-H1840108020	4		Bolt
10	MA-19680415AG1	1		Bracket, Radiator
	MA-19680415AG2	1		Bracket, Radiator Replaces MA-19680415AG1 when inventory is depleted
12	MA-H1540108030	6	/P	Bolt
13	MA-19640421000	1		Hose, Upper
15	MA-19640423000	1		Hose, Lower
16	MA-00501100450	2		Clamp, Hose
17	MA-11930439000	6		Grommet
18	MA-67700-26000	6		Collar
	MA-19630422001	1	S	Hose, Drain Ass'y. Includes Items 19 & 19-1
19	MA-19630422101	1	/P	Hose
19-1	MA-69501-06613	2		Clamp
20	MA-11740415000	1		Joint, Water
	MA-67401A00113	1	/P	Water Cock Ass'y. Includes Items 21 & 21-1
21	MA-67401-00113	1	S	Cock Water
21-1	MA-67401-00114	1		Gasket
22	MA-A0540108095	1		Bolt
23	MA-00504112005	1		Clamp, Hose
24	MA-H1540108016	4		Bolt
25	MA-A3600100802	1		Washer, Spring
26	MA-19640426000	1		Cushion
27		1		Cushion Not used on this product
28	MA-10303531000	1		Rubber B
30		1		Net, Radiator Not used on this product
31	MA-19680419AG2	1	S	Net, Radiator
32	MA-10312574000	1		Collar
33	MA-03500140818	1		Washer
34	MA-00501100380	1		Clamp, Hose
35	MA-00501100430	1		Clamp, Hose
	MA-19080445000	1		Sub Tank Ass'y. Includes Items 37 & 38
37	MA-19080445100	1		Tank Sub
38	MA-19080445200	1		Cap Ass'y.
39	MA-H1440106016	2	/P	Bolt
40	MA-19630424000	1		Cushion
41	MA-19630425000	1		Cushion
42	MA-11912638000	1		Cushion
43		1		Seal Not used on this product
44		1		Rubber Not used on this product
45	MA-19812821000	1		Mark Blind
46	MA-19640431000	2		Cushion

www.mymowerparts.com

For Discount Cub Cadet Parts Call 606-678-9623 or 606-561-4983

Ref #	Part Number	Qty	S/P/F	Description
47	MA-19640432000	2		Cushion
48	MA-19640433000	1		Cushion
49	MA-19630431000	1		Cushion
50		1		Hose, Upper Not used on this product
51		1		Hose, Lower Not used on this product
52	MA-10212677000	2		Cushion B

www.mymowerparts.com

For Discount Cub Cadet Parts Call 606-678-9623 or 606-561-4983

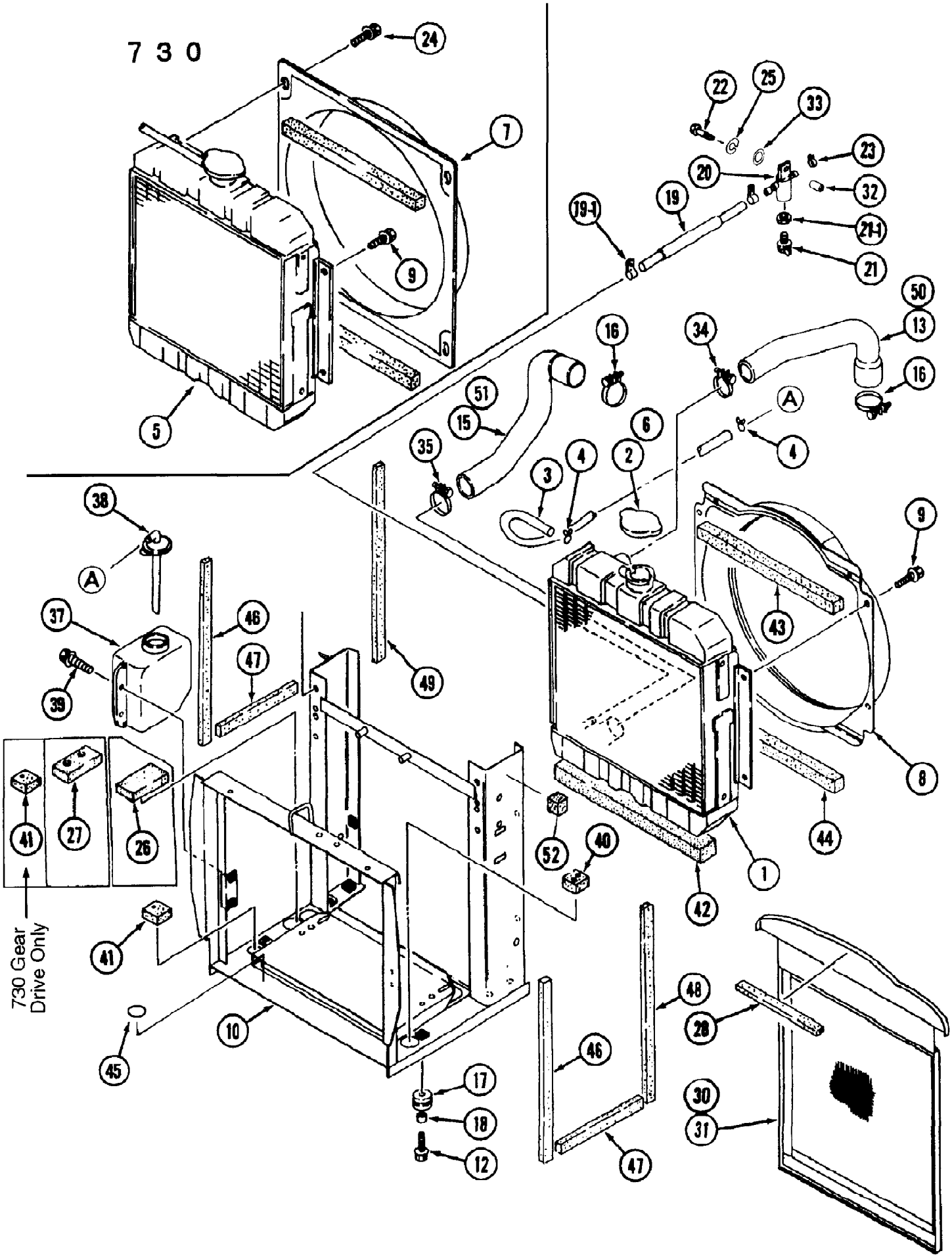

www.mymowerparts.com

For Discount Cub Cadet Parts Call 606-678-9623 or 606-561-4983

Ref #	Part Number	Qty	S/P/F	Description
		1		Radiator Includes Items 1-4; Not used on this product
1		1		Body, Radiator Not used on this product
2		1		Cap Not used on this product
	MA-19640412000	1	/P	Radiator Includes Items 3 - 7 & 24
3	MA-19640411200	1		Hose
4	MA-68201-01814	2		Clip
5	MA-19640412100	1	S	Body, Radiator
6	MA-68201-01813	1		Cap
7	MA-19080411200	1		Shroud, Fan
8		1		Shroud, Fan Not used on this product
9	MA-H1840108020	4		Bolt
10	MA-19680415AG1	1		Bracket, Radiator
	MA-19680415AG2	1		Bracket, Radiator Replaces MA-19680415AG1 when inventory is depleted
12	MA-H1540108030	6	/P	Bolt
13	MA-19640421000	1		Hose, Upper
15	MA-19640423000	1		Hose, Lower
16	MA-00501100450	2		Clamp, Hose
17	MA-11930439000	6		Grommet
18	MA-67700-26000	6		Collar
	MA-19630422001	1	S	Hose, Drain Ass'y. Includes Items 19 & 19-1
19	MA-19630422101	1	/P	Hose
19-1	MA-69501-06613	2		Clamp
20	MA-11740415000	1		Joint, Water
	MA-67401A00113	1	/P	Water Cock Ass'y. Includes Items 21 & 21-1
21	MA-67401-00113	1	S	Cock Water
21-1	MA-67401-00114	1		Gasket
22	MA-A0540108095	1		Bolt
23	MA-00504112005	1		Clamp, Hose
24	MA-H1540108016	4		Bolt
25	MA-A3600100802	1		Washer, Spring
26		1		Cushion Not used on this product
27	MA-19640427000	1		Cushion
28	MA-10303531000	1		Rubber B
30		1		Net, Radiator Not used on this product
31	MA-19680419AG2	1	S	Net, Radiator
32	MA-10312574000	1		Collar
33	MA-03500140818	1		Washer
34	MA-00501100380	1		Clamp, Hose
35	MA-00501100430	1		Clamp, Hose
	MA-19080445000	1		Sub Tank Ass'y. Includes Items 37 & 38
37	MA-19080445100	1		Tank Sub
38	MA-19080445200	1		Cap Ass'y.
39	MA-H1440106016	2	/P	Bolt
40	MA-19630424000	1		Cushion
41	MA-19630425000	1		Cushion
42	MA-11912638000	1		Cushion
43		1		Seal Not used on this product
44		1		Rubber Not used on this product
45	MA-19812821000	1		Mark Blind
46	MA-19640431000	2		Cushion

www.mymowerparts.com

For Discount Cub Cadet Parts Call 606-678-9623 or 606-561-4983

Ref #	Part Number	Qty	S/P/F	Description
47	MA-19640432000	2		Cushion
48	MA-19640433000	1		Cushion
49	MA-19630431000	1		Cushion
50		1		Hose, Upper Not used on this product
51		1		Hose, Lower Not used on this product
52	MA-10212677000	2		Cushion B

www.mymowerparts.com

For Discount Cub Cadet Parts Call 606-678-9623 or 606-561-4983

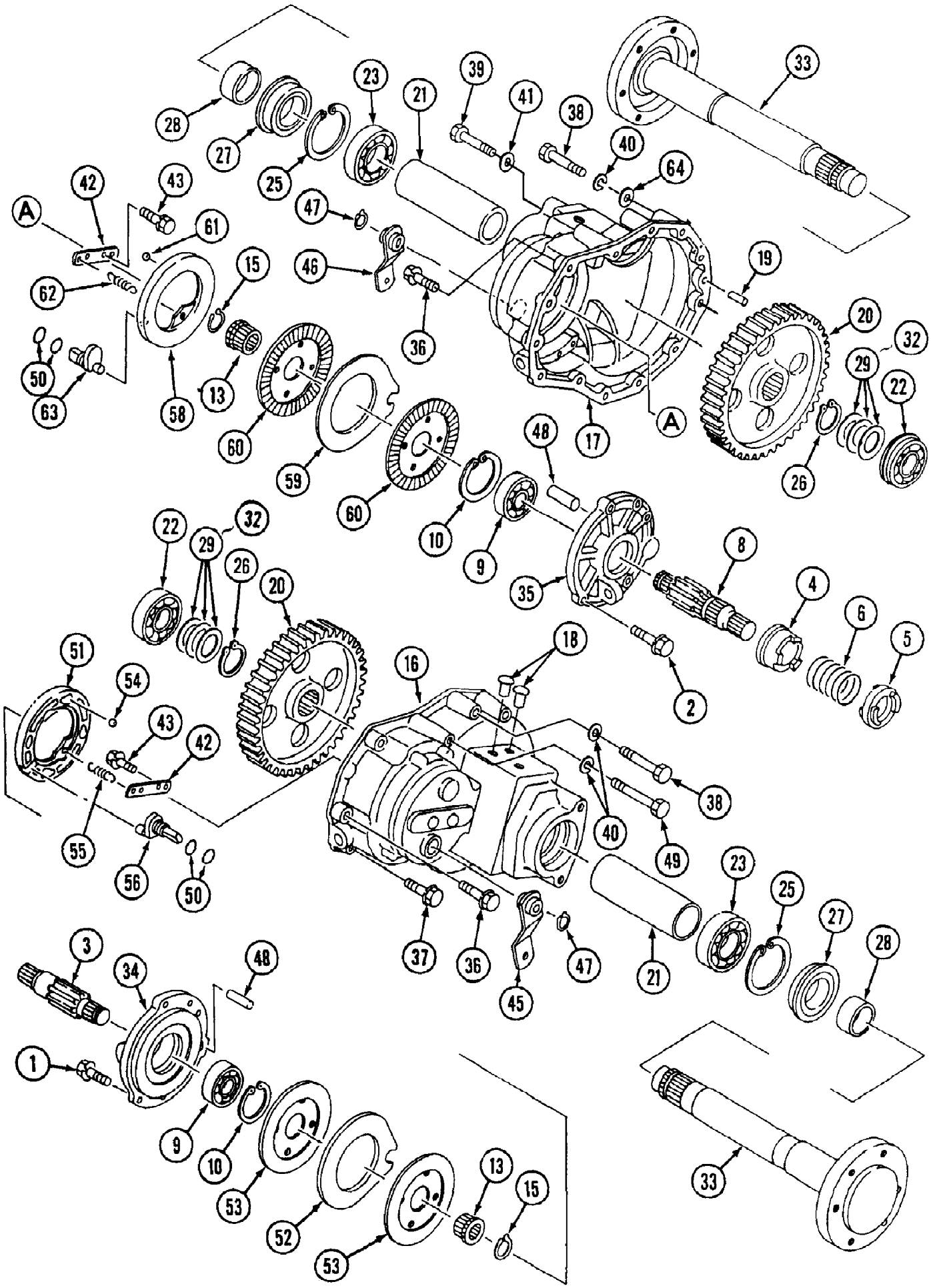

www.mymowerparts.com

For Discount Cub Cadet Parts Call 606-678-9623 or 606-561-4983

Ref #	Part Number	Qty	S/P/F	Description
1	MA-F1550110030	12		Bolt
2		1		UNKNOWN
3	MA-19641511000	1		Shaft L.H.
4	MA-19061519000	1		Sleeve
5	MA-19061521000	1		Spacer
6	MA-19061523000	1		Spring
8	MA-19641512000	1		Shaft R.H.
9	MA-07520663060	2		Bearing
10	MA-07410007201	2		Ring
13	MA-19641519000	2		Hub, Brake
15	MA-07400003000	2	/P	Ring
16	MA-19641513AG1	1	/P	Case L.H.
17	MA-19641514AG1	1	/P	Case R.H.
18	MA-05534-14000	4		Plug
19	MA-05401010020	4		Pin, Dowel
20	MA-19641517000	2		Gear, 68T
21	MA-19641518000	2		Collar
22	MA-07500063085	2		Bearing
23	MA-07500062100	2		Bearing
25	MA-07410009001	2		Ring
26	MA-07400004801	2	/P	Ring
27	MA-08412579013	2		Seal, Oil
28	MA-10211525000	2		SI-Sleeve
29	MA-19071547000	1		Shim Set Includes Items 29 - 32
30	MA-07300005202	AR		Liner
31	MA-07300005204	AR		Liner
32	MA-07300005206	AR		Liner
33	MA-19641516AG0	2		Shaft, Axle
34	MA-19641524000	1		Holder L.H.
35	MA-19641525000	1		Holder R.H.
36	MA-F1540112040	4		Bolt
37	MA-F1540112050	2		Bolt
38	MA-A0540112080	8		Bolt
39	MA-A9440112090	6		Bolt
40	MA-A3600101202	12		Washer
41	MA-03550161226	6		Washer
42	MA-19641527000	2		Hook
43	MA-F1540108020	4		Bolt
45	MA-19641528000	1		Lever, Brake L.H.
46	MA-19641529000	1		Lever, Brake R.H.
47	MA-07400002000	2		Ring
48	MA-19641526000	2		Pin
49	MA-A0540112100	4		Bolt
50	MA-08300100160	4	/P	O-Ring
	MA-19641521000	1		Brake Ass'y. L.H. Includes Items 51-56, 45
51	MA-10321501100	1		Plate, Cam
52	MA-10301538000	1		Plate, Mating
53	MA-10301537000	2		Disk
54	MA-10321501400	4		Ball, Steel
55	MA-10321501500	2		Spring, Return
56	MA-35151468000	1		Cam, Brake
	MA-19641523000	1		Brake Ass'y. R.H. Includes Items 58-63, 46
58	MA-10321502100	1		Plate, Cam

www.mymowerparts.com

For Discount Cub Cadet Parts Call 606-678-9623 or 606-561-4983

Ref #	Part Number	Qty	S/P/F	Description
59	MA-10301538000	1		Plate, Mating
60	MA-10301537000	2		Disk
61	MA-10321501400	4		Ball, Steel
62	MA-10321501500	2		Spring, Return
63	MA-35151468000	1		Cam, Brake
64	MA-03500151226	4		Washer

www.mymowerparts.com

For Discount Cub Cadet Parts Call 606-678-9623 or 606-561-4983

Repair Gasket Kit 30 HP Eng (7300 SN 21932-Lower/7305 SN 23069-Lower)

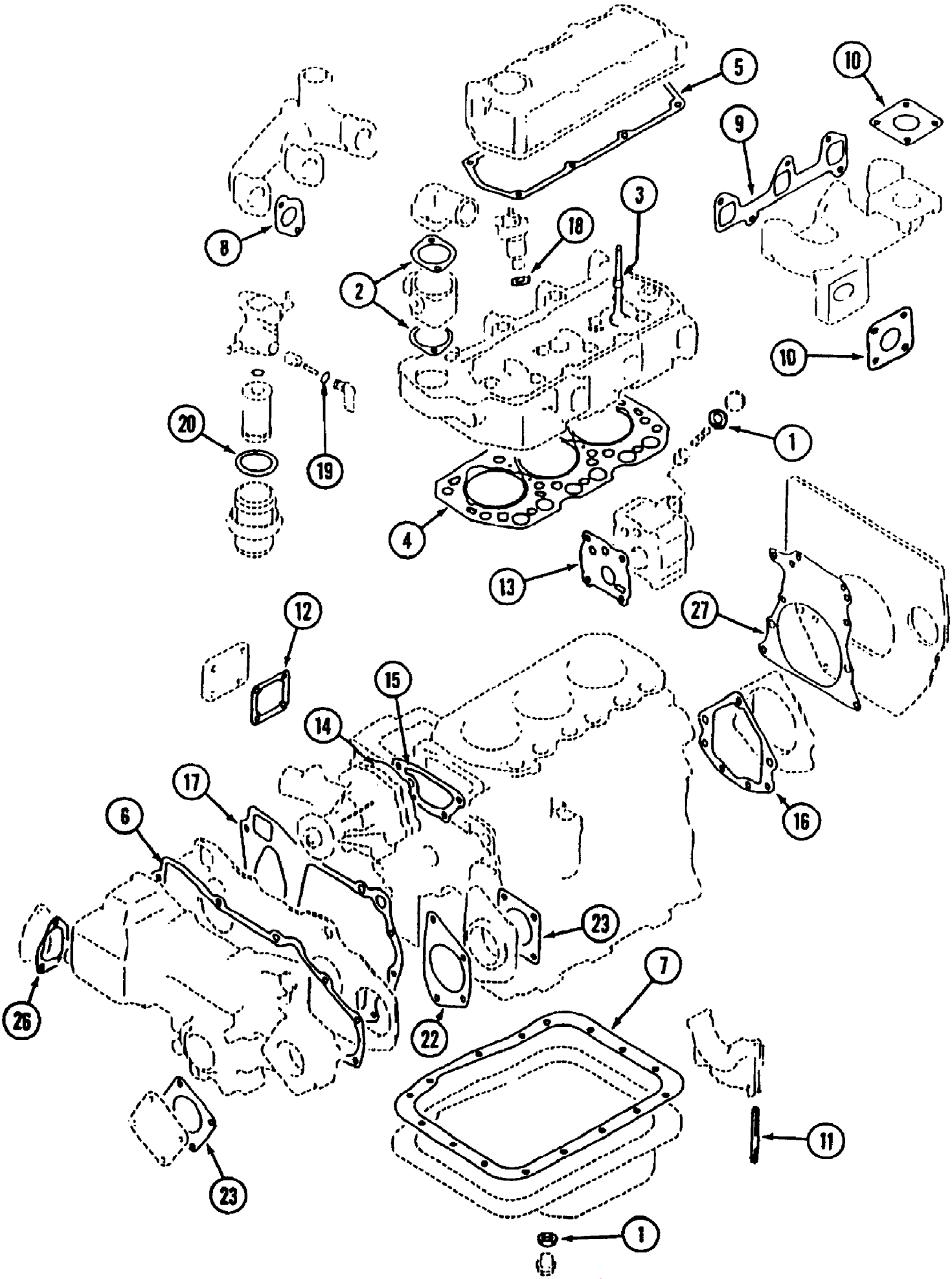

www.mymowerparts.com

For Discount Cub Cadet Parts Call 606-678-9623 or 606-561-4983

Repair Gasket Kit 30 HP Eng (7300 SN 21932-Lower/7305 SN 23069-Lower)

Ref #	Part Number	Qty	S/P/F	Description
	MA-30H94-01010	1	S	Gasket Kit Includes Items 1 - 27
1	MA-MD000312	2		Gasket, Oil Drain Plug
2	MA-MD000551	2	S	Gasket Included In MA-30H97-00048 Gasket Kit
3	MA-MM413060	6		Seal, Valve Stem Included In MA-30H97-00048 Gasket Kit
4	MA-30H01-00300	1	/P	Gasket, Cylinder Head
5	MA-30H04-00100	1	S	Gasket, Rocker Cover Included In MA-30H97-00048 Gasket Kit
6	MA-30H11-00201	1	S	Gasket, Gear Case
7	MA-30H13-00101	1		Gasket, Oil Pan
8	MA-MM407305	3	S	Gasket, Intake Manifold Included In MA-30H97-00048 Gasket Kit
9	MA-30H30-00100	1		Gasket, Exhaust Manifold Included In MA-30H97-00048 Gasket Kit
10	MA-30A30-00200	2		Gasket Included In MA-30H97-00048 Gasket Kit
11	MA-MM406228	4		Seal, Side
12	MA-30A63-00101	1		Gasket, Cover
13	MA-30H35-00101	1		Gasket, Oil pump Body
14	MA-MM409326	1		Gasket, Water Pump
15	MA-30H45-00101	1	/P	Gasket, Water Pump
16	MA-30H07-00201	1	/P	Gasket, Oil Seal
17	MA-30H07-00300	1		Gasket, Front Plate
18	MA-MM432045	3		Gasket, Nozzle Holder Included In MA-30H97-00048 Gasket Kit
19	MA-MM404874	1	S	O-Ring, Element
20	MA-MM404878	1		O-Ring, Filter Cup
22	MA-30H11-00101	1	/P	Gasket, Housing
23	MA-30A11-00101	2		Gasket, Oil Pump Cover
26	MA-30A11-00301	1	S	Gasket, Governor Cover
27	MA-30H12-00101	1	/P	Gasket, Rear Plate
	MA-30H97-00048	1		Gasket Kit

www.mymowerparts.com

For Discount Cub Cadet Parts Call 606-678-9623 or 606-561-4983

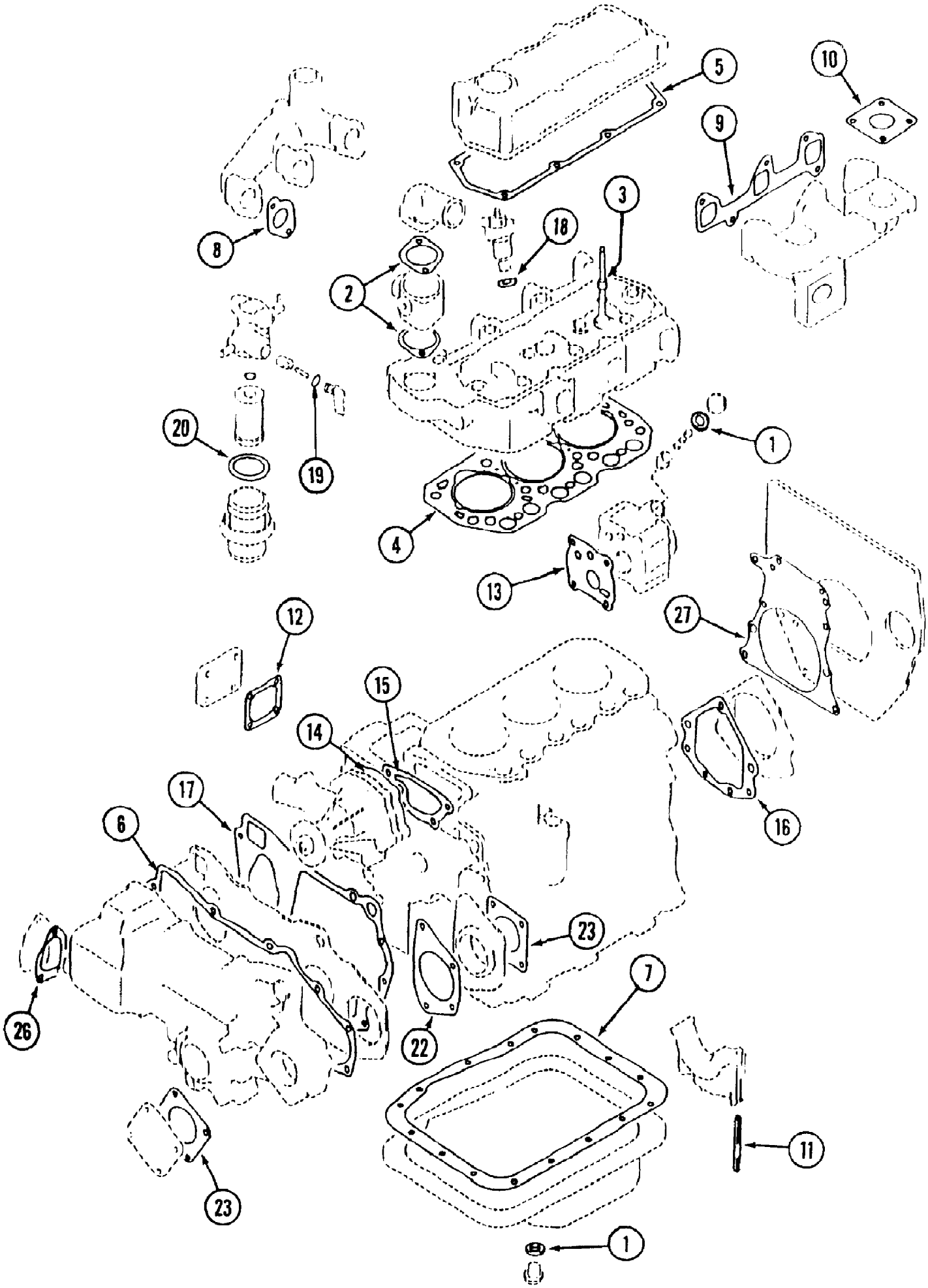

www.mymowerparts.com

For Discount Cub Cadet Parts Call 606-678-9623 or 606-561-4983

Repair Gasket Kit 30HP Engine 7300 S/N 21933 & Up

Ref #	Part Number	Qty	S/P/F	Description
	MA-30H94-01010	1	S	Gasket Kit Includes items 1-27
1	MA-MD000312	2		Gasket, Oil Drain Plug
2	MA-MD000551	2	S	Gasket Included in Gasket Kit P/N MA-30H97-00048
3	MA-MM413060	6		Seal, Valve Stem Included in Gasket Kit P/N MA-30H97-00048
4	MA-30H01-00300	1	/P	Gasket, Cylinder Head
5	MA-30H04-00100	1	S	Gasket, Rocker Cover Included in Gasket Kit P/N MA-30H97-00048
6	MA-30H11-00201	1	S	Gasket, Gear Case
7	MA-30H13-00101	1		Gasket, Oil Pan
8	MA-MM407305	3	S	Gasket, Inlet Included in Gasket Kit P/N MA-30H97-00048
9	MA-30H30-00100	1		Gasket, Exhaust Manifold Included in Gasket Kit P/N MA-30H97-00048
10	MA-30A30-00200	1		Gasket Included in Gasket Kit P/N MA-30H97-00048
11	MA-MM406228	4		Seal, Side
12	MA-30A63-00101	1		Gasket, Cover
13	MA-30H35-00101	1		Gasket, Oil Pump Body
14	MA-MM409326	1		Gasket, Water Pump
15	MA-30H45-00101	1	/P	Gasket, Water Pump
16	MA-30H07-00201	1	/P	Gasket, Oil Seal
17	MA-30H07-00300	1		Gasket, Front Plate
18	MA-MM432045	3		Gasket, Nozzle Holder Included in Gasket Kit P/N MA-30H97-00048
19	MA-MM404874	1	S	O-Ring, Valve
20	MA-MM404878	1		O-Ring, Filter Cup
22	MA-30H11-00101	1	/P	Gasket, Housing
23	MA-30A11-00101	2		Gasket, Oil Pump Cover
26	MA-30A11-00301	1	S	Gasket, Governor Cover
27	MA-30H12-00101	1	/P	Gasket, Rear Plate
	MA-30H97-00048	1		Gasket Kit Includes Ref. Nos. 2,3,5,8,9,10,and 18

www.mymowerparts.com

For Discount Cub Cadet Parts Call 606-678-9623 or 606-561-4983

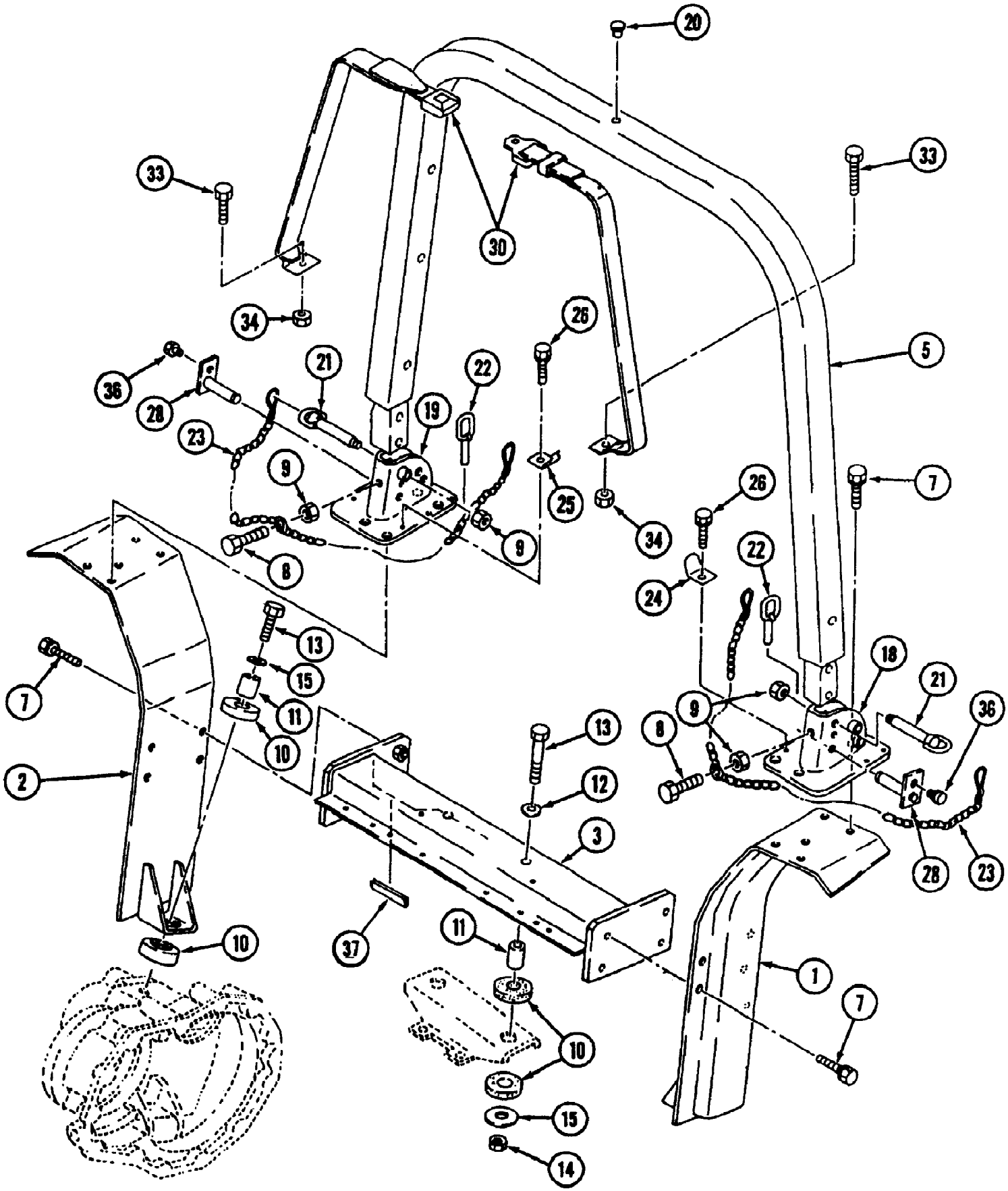

www.mymowerparts.com

For Discount Cub Cadet Parts Call 606-678-9623 or 606-561-4983

Ref #	Part Number	Qty	S/P/F	Description
1	MA-19643901BD0	1		Frame L.H.
2	MA-19643902BD0	1		Frame R.H.
3	MA-19643905BD0	1		Support
5	MA-19643909AG0	1		Roll Bar
7	MA-F9450112035	16		Bolt
8	MA-A0520112040	2		Bolt
9	MA-A3030112002	4		Nut
10	MA-19633914000	8		Rubber, Cushion
11	MA-19633915000	4		Collar
12	MA-03550161630	2		Washer
13	MA-A9450116060	4		Bolt
14	MA-A0830116001	2		Nut
15	MA-03500171652	4		Washer
18	MA-19633903AG0	1		Bracket L.H.
19	MA-19633904AG0	1		Bracket R.H.
20	MA-11763534001	1		Plug, Mat
21	MA-19043904000	2		Pin
22	MA-19043905000	2		Pin, Linch
23	MA-19633912000	2		Chain
24	MA-19633926000	1		Hook, Seat Belt L.H.
25	MA-19633927000	1		Hook, Seat Belt R.H.
26	MA-F1540108012	2		Bolt
28	MA-19043903000	2		Pin, Hinge
30	MA-19633919100	1	S	Seat Belt Ass'y. Includes Ref.33 & 34
33	MA-19633919400	2		Bolt
34	MA-19633919500	2		Nut
36	MA-19043907000	2		Bolt
37	MA-19682238000	1		Rubber, Band

www.mymowerparts.com

For Discount Cub Cadet Parts Call 606-678-9623 or 606-561-4983

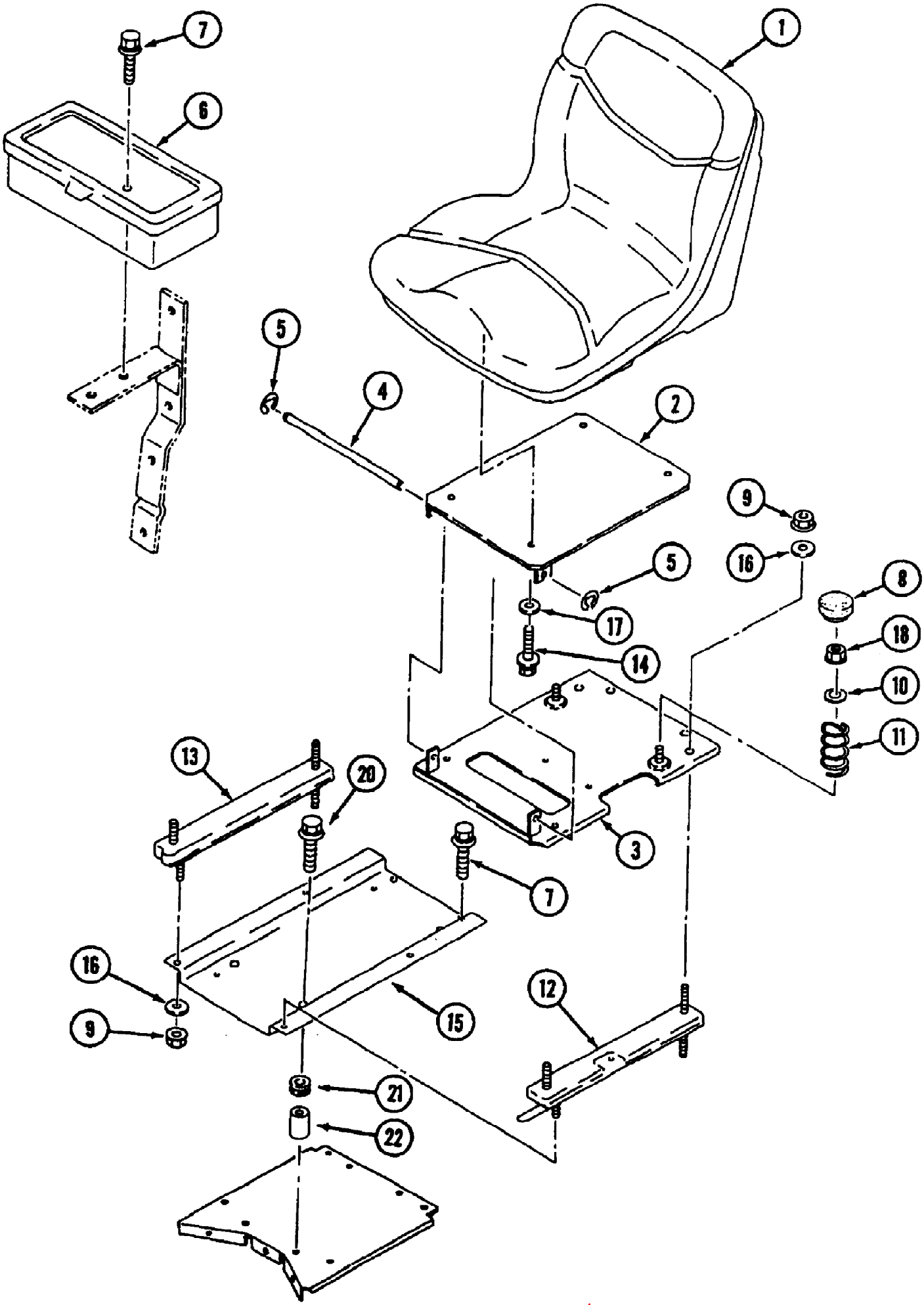

www.mymowerparts.com

For Discount Cub Cadet Parts Call 606-678-9623 or 606-561-4983

Ref #	Part Number	Qty	S/P/F	Description
1	757-3005	1		Seat Ass'y.
2	MA-19633404AG1	1		Bracket
3	MA-19633409AG1	1		Bracket,Seat
4	MA-19633411000	1		Pin
5	MA-07420100800	2		Ring
6	MA-69509-16000	1		Box, Tool
7	MA-H1540108020	4		Bolt
8	MA-19633417000	2		Rubber
9	712-3097	8	S	Nut, 8 mm
10	MA-03500160826	2		Washer
11	MA-19633415000	2	S	Spring
12	703-2641	1		Adjuster, Slide
13	703-2640	1		Rail, Slide
14	710-3008	2	/P	Bolt
15	MA-19643408AG0	1		Support
16	736-0119	8	S	Washer, Lock
17	736-0119	2	S	Washer, Lock
	736-0275	1	S	Flat Washer
18	MA-F3010108001	2		Nut
20	MA-H1540108025	2		Bolt
21	MA-11930439000	2		Grommet
22	MA-67700-26000	2		Collar

www.mymowerparts.com

For Discount Cub Cadet Parts Call 606-678-9623 or 606-561-4983

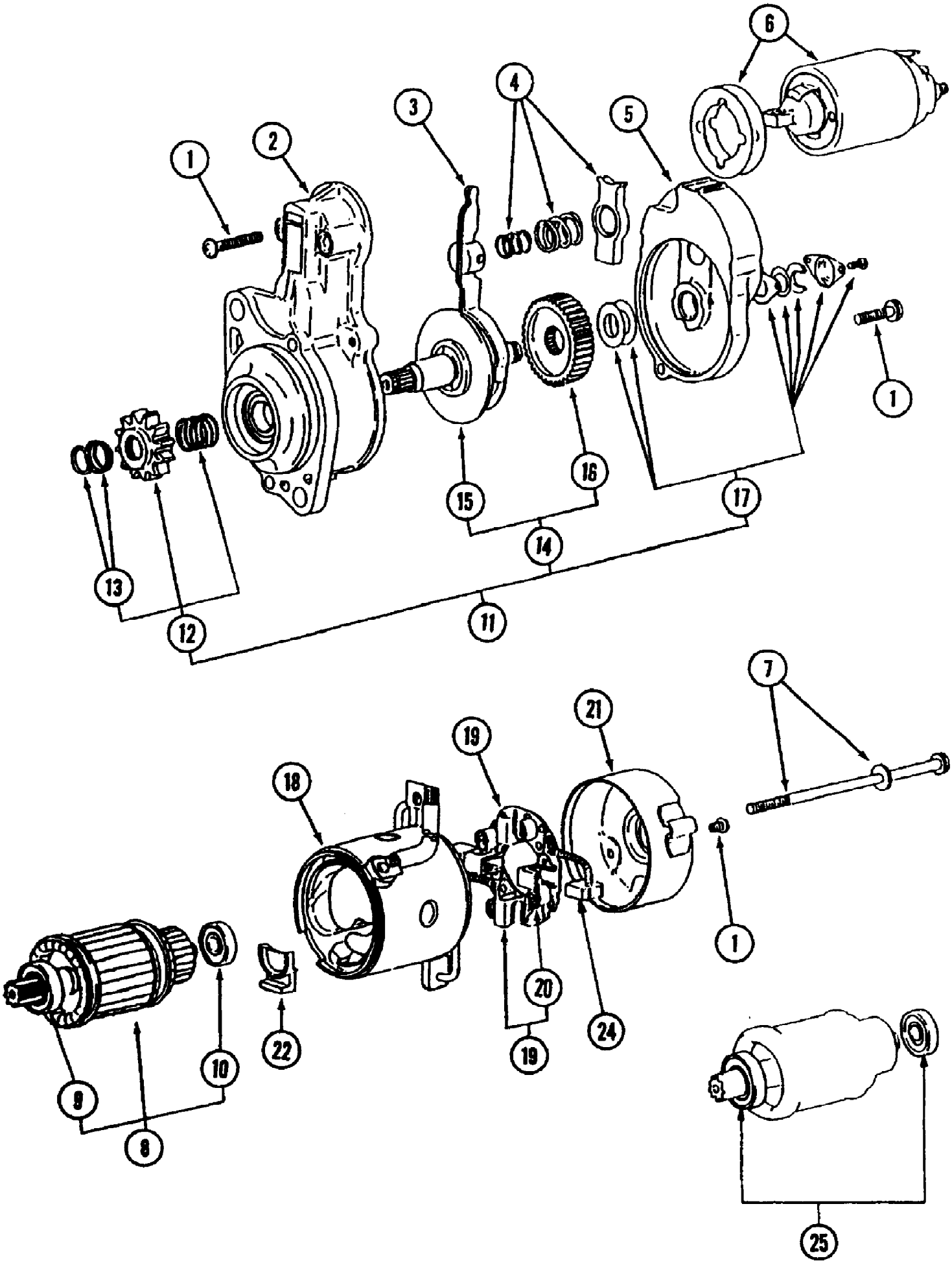

www.mymowerparts.com

For Discount Cub Cadet Parts Call 606-678-9623 or 606-561-4983

Starter 30 HP Engine (7300 S/N 21932-Lower/7305 S/N 23069-Lower)

Ref #	Part Number	Qty	S/P/F	Description
	MA-MM409412	1		Starter Ass'y. Includes Items 1 - 24
1	MA-M414X04871	1	/P	Screw Set
2	MA-M614X64971	1	S	Bracket Ass'y.,Front
3	MA-M863C06171	1	S	Lever Ass'y.
4	MA-M389X11472	1	S	Spring Set
5	MA-M640827771	1		Bracket Ass'y.,Center
6	MA-M372X00471	1	/P	Switch Ass'y.
7	MA-M901X00371	1		Bolt Set
8	MA-M106X29871	1	S	Armature Set
9	MA-S930P16470	1	S	Bearing, Front
10	MA-S930P29901	1		Bearing, Rear
11	MA-M357X85371	1		Shaft Ass'y., Clutch Set
12	MA-M605X30671	1		Pinion Set
13	MA-M385X03771	1		Stopper Set
14	MA-M231X01371	1		Gear Set
15	MA-M357T73171	1		Shaft Ass'y., Pinion
16	MA-M231C01301	1		Gear
17	MA-M212X11771	1		Cover Set
18	MA-MM502440	1		Yoke Ass'y.
19	MA-ME700127	1		Holder Ass'y., Brush
20	MA-M391C02501	4		Spring, Brush
21	MA-M644B21201	1		Bracket Ass'y., Rear
22	MA-M578D22801	1		Packing
24	MA-M648C28271	2	S	Brush
25	MA-MM436608	1		Service Kit

www.mymowerparts.com

For Discount Cub Cadet Parts Call 606-678-9623 or 606-561-4983

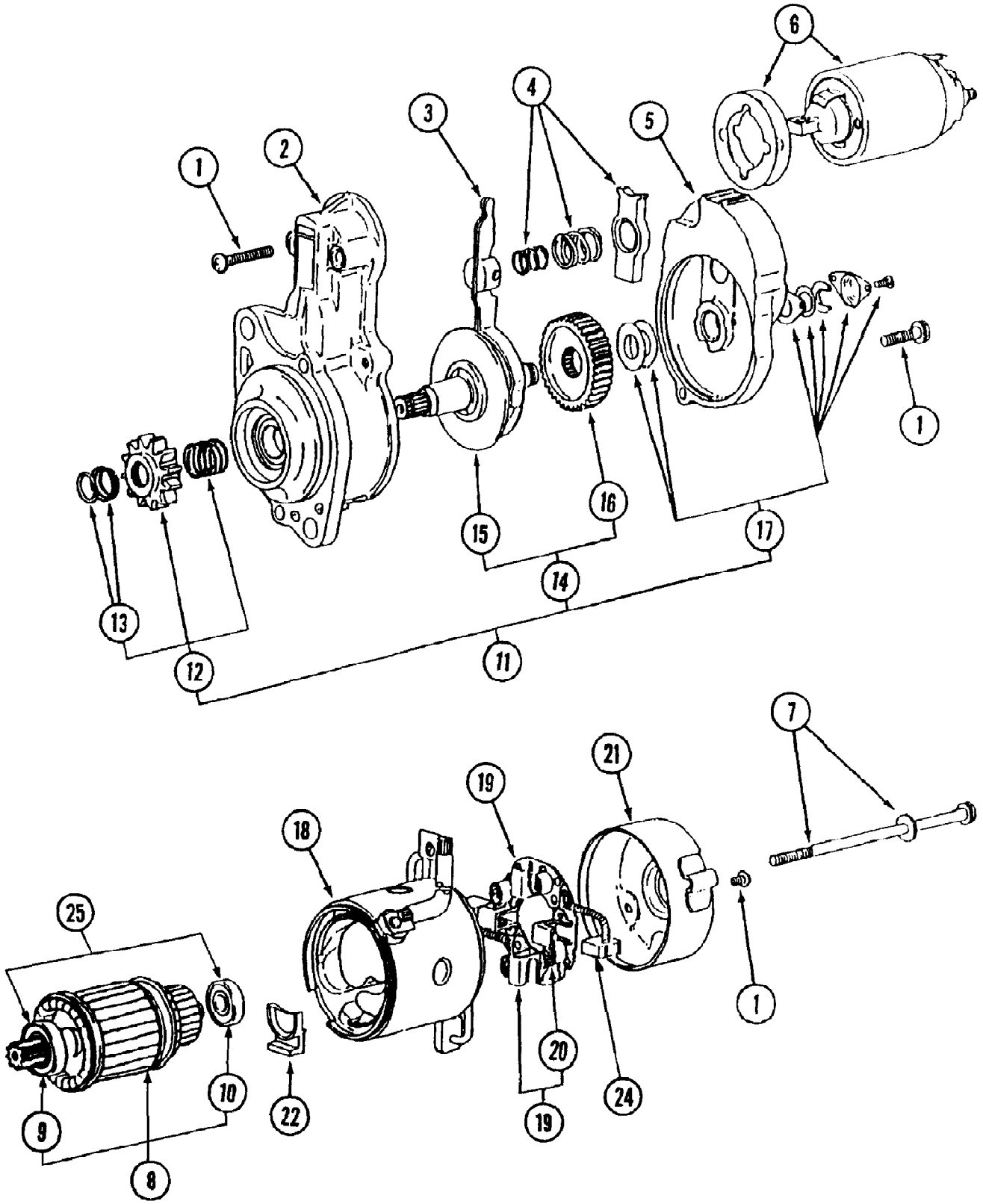

www.mymowerparts.com

For Discount Cub Cadet Parts Call 606-678-9623 or 606-561-4983

Ref #	Part Number	Qty	S/P/F	Description
	MA-MM409412	1		Starter Ass'y. Includes items 1-24
1	MA-M414X04871	1	/P	Screw Set
2	MA-M614X64971	1	S	Bracket Ass'y., Front
3	MA-M863C06171	1	S	Lever Ass'y.
4	MA-M389X11472	1	S	Spring Set
5	MA-M640B27771	1		Bracket Ass'y., Center
6	MA-M372X00471	1	/P	Switch Ass'y.
7	MA-M901X00371	1		Bolt Set
8	MA-M106X29871	1	S	Armature Set
9	MA-S930P16470	1	S	Bearing, Front
10	MA-S903P60470	1		Bearing, Rear
11	MA-M357X85371	1		Shaft Ass'y., Clutch Set
12	MA-M605X30671	1		Pinion Set
13	MA-M385X03771	1		Stopper Set
14	MA-M231X01371	1		Gear Set
15	MA-M357T73171	1		Shaft Ass'y., Pinion
16	MA-M231C01301	1		Gear
17	MA-M212X11771	1		Cover Set
18	MA-M800X44971	1		Yoke Ass'y.
19	MA-M649T05071	1		Holder Ass'y., Brush
20	MA-M391C02501	4		Spring, Brush
21	MA-M644B21201	1		Bracket Ass'y., Rear
22	MA-M578D22801	1		Packing
24	MA-M648C28271	2	S	Brush
25	MA-MM436608	1		Service Kit

www.mymowerparts.com

For Discount Cub Cadet Parts Call 606-678-9623 or 606-561-4983

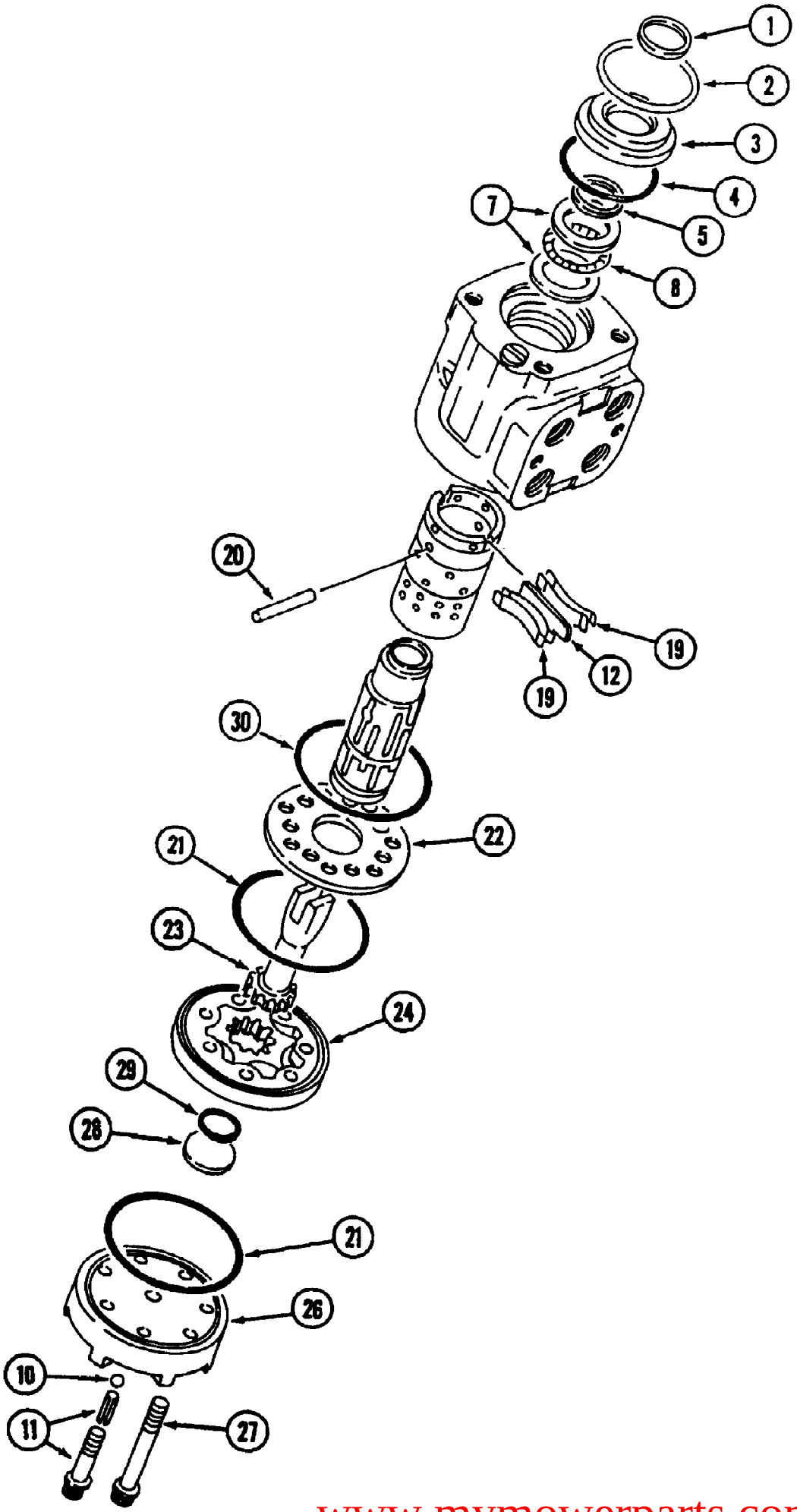

www.mymowerparts.com

For Discount Cub Cadet Parts Call 606-678-9623 or 606-561-4983

Ref #	Part Number	Qty	S/P/F	Description
	MA-10302268002	1	/P	Steering Unit Includes Items 1 - 29
1	MA-10302268520	1	F	Seal, Dust
2	MA-11932347150	1		Ring, Retaining
3	MA-11932347160	1		Bushing
4	MA-10302268500	1	F	O-Ring
5	MA-10302268510	1	F	Seal, Oil
	MA-10302268700	1	/P	Kit, Needle Bearing Includes Items 7 & 8
7	MA-10302268340	2		Bearing
8	MA-11932347140	1	S	Bearing, Needle
10	MA-10302268120	1		Ball
11	MA-10302268110	1		Retainer, Screw Ass'y.
12	MA-10302268320	2		Spring, Flat
19	MA-11932347130	4		Spring, Centering
20	MA-10302268310	1		Pin
21	MA-10302268330	2	F	O-Ring
22	MA-10302268210	1		Plate, Spacer
23	MA-10302268301	1		Drive
24	MA-10302268201	1		Geroter
26	MA-11932347120	1		Cap
27	MA-10302268100	6		Screw
28	MA-10302268530	1		Plug
29	MA-10302268540	1	F	O-Ring
30	MA-10302268350	1	F	O-Ring
	MA-10302268600	1		Kit, Seal

www.mymowerparts.com

For Discount Cub Cadet Parts Call 606-678-9623 or 606-561-4983

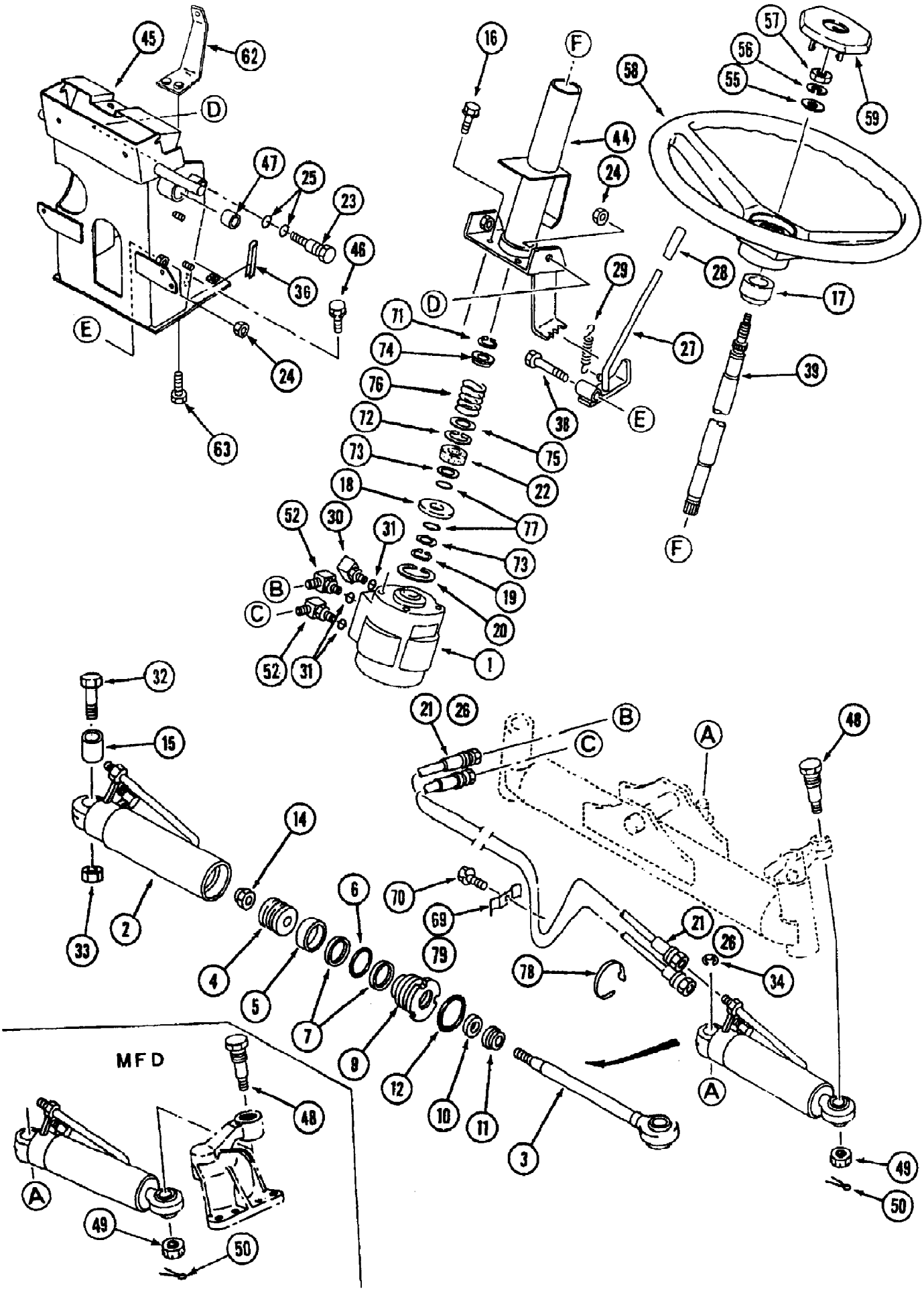

www.mymowerparts.com

For Discount Cub Cadet Parts Call 606-678-9623 or 606-561-4983

Ref #	Part Number	Qty	S/P/F	Description
1	MA-10302268002	1	/P	Steering Unit
	MA-19642205AG0	1		Cylinder, Ass'y. Includes Items 2 - 15
2	MA-19642206AG0	1		Tube, Ass'y.
3	MA-19642207AG0	1		Rod, Cylinder
4	MA-19632208000	1		Piston
	MA-19632209000	1		Kit, Seal A Includes Items 5 - 7
5	MA-19632209100	1		Wear Ring
6	MA-08301100340	1		O-Ring
7	MA-08320100340	2		Ring
9	MA-19632211000	1		Case
	MA-19632212000	1		Kit, Seal B Includes Items 10 & 11
10	MA-19632212100	1		Seal, Rod
11	MA-19632212200	1		Seal, Dust
12	MA-08301100400	1		O-Ring
14	MA-A3530112000	1		Nut
15	MA-07963024250	1		Bushing
16	MA-F1550110020	4		Bolt
17	MA-11742201170	1		Bushing, Column
18	MA-27931515000	1		Washer
19	MA-07410004001	1		Ring
20	MA-07400002000	1		Ring
21		1		Hose Not used on this product
22	MA-08401022358	1		Oil Seal
23	MA-19632257000	2		Bolt
24	MA-A3030112002	2		Nut
25	MA-08301100160	4		O-Ring
26	MA-19682213000	2		Hose
27	MA-19672255AG0	1		Lever
28	MA-14212284000	1		Grip
29	MA-27932754001	1		Spring
30	MA-19632259000	1		Valve, Check
31	MA-08301100140	3		O-Ring
32		1		Bolt Not used on this product
33		1		Nut Not used on this product
34		1		Ring Not used on this product
36	MA-19682238000	1		Rubber, Band
37	MA-A3030112002	1		Nut
38	MA-40520112060	1		Bolt
39	MA-19682235000	1		Shaft, Steering
44	MA-19642252AG0	1		Column
45	MA-19682265AG0	1	F	Column Brkt.
	MA-19682265AG1	1	F	Column Brkt.
46	MA-F1550110025	4		Bolt
47	MA-07961025200	2		Bushing
48	MA-19632267000	1		Bolt
49	MA-A3130101601	1		Nut
50	MA-05200140032	1		Pin, Split
52	MA-06313117130	2		Elbow Includes Item 31
55	MA-03500151430	1		Washer
56	MA-A3600101402	1		Washer
57	MA-A3030114002	1		Nut
	MA-10302216000	1		Steering Ass'y. Includes Items 58 & 59
58	MA-10302217000	1		Steering Wheel

www.mymowerparts.com

For Discount Cub Cadet Parts Call 606-678-9623 or 606-561-4983

Ref #	Part Number	Qty	S/P/F	Description
59	MA-10302218000	1		Center Pad
62	MA-19682267000	1	F	Bracket
63	MA-F1540108020	1	F	Bolt
69	MA-19632223000	1		Clamp
70	MA-F1540108020	1		Bolt
71	MA-07400102200	1		Ring
72	MA-07410003500	1		Ring
73	MA-07310002005	2		Liner t=0.5
74	MA-19672257000	1		Collar
75	MA-19672258000	1		Liner
76	MA-31223012001	1		Spring
77	MA-08301100200	2		O-Ring
78	MA-00511070070	1		Band, Wire
79		1		Clamp Not used on this product

www.mymowerparts.com

For Discount Cub Cadet Parts Call 606-678-9623 or 606-561-4983

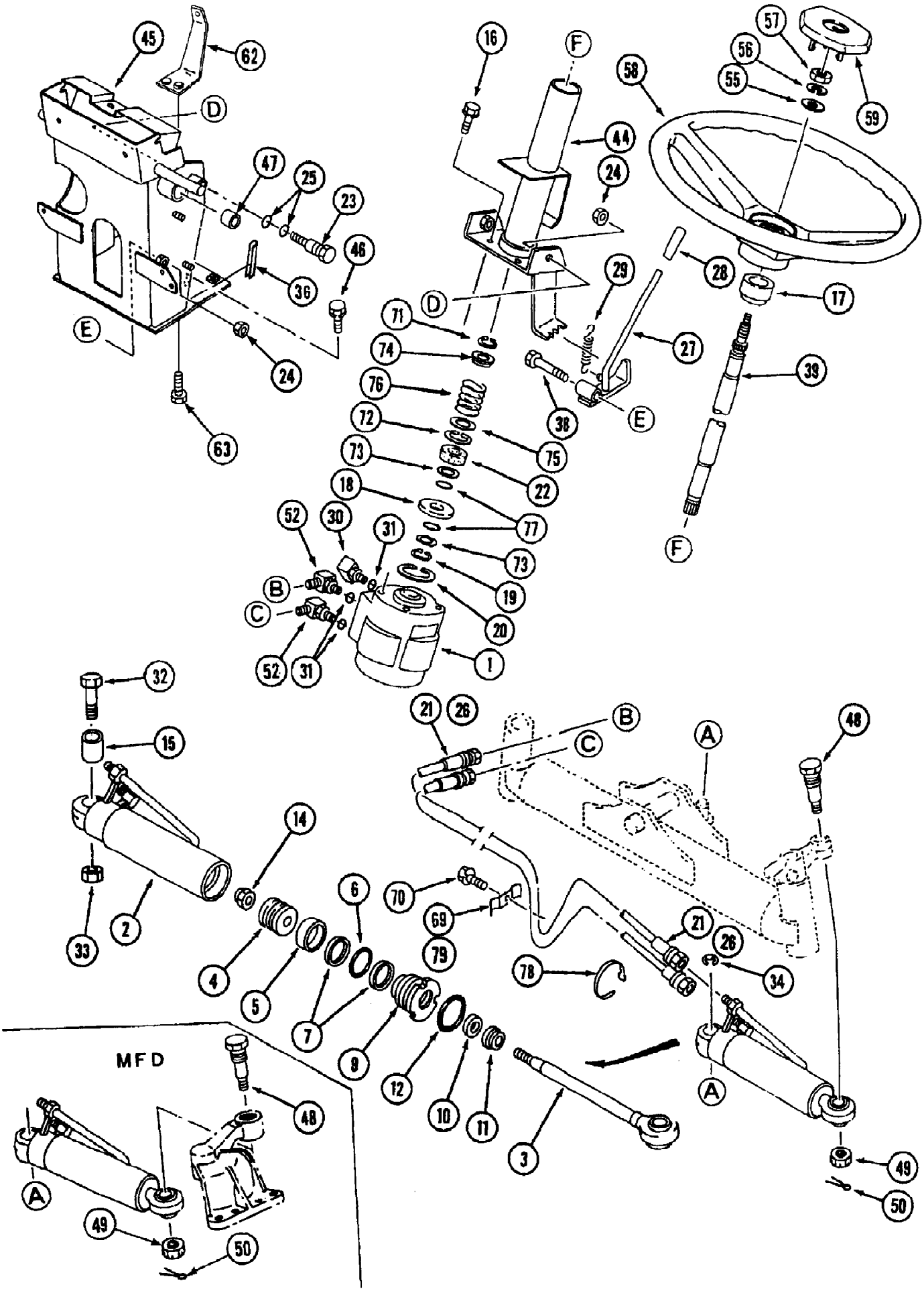

www.mymowerparts.com

For Discount Cub Cadet Parts Call 606-678-9623 or 606-561-4983

Ref #	Part Number	Qty	S/P/F	Description
1	MA-10302268002	1	/P	Steering Unit
	MA-19642205AG0	1		Cylinder, Ass'y. Includes Items 2 - 15
2	MA-19642206AG0	1		Tube, Ass'y.
3	MA-19642207AG0	1		Rod, Cylinder
4	MA-19632208000	1		Piston
	MA-19632209000	1		Kit, Seal A Includes Items 5 - 7
5	MA-19632209100	1		Wear Ring
6	MA-08301100340	1		O-Ring
7	MA-08320100340	2		Ring
9	MA-19632211000	1		Case
	MA-19632212000	1		Kit, Seal B Includes Items 10 & 11
10	MA-19632212100	1		Seal, Rod
11	MA-19632212200	1		Seal, Dust
12	MA-08301100400	1		O-Ring
14	MA-A3530112000	1		Nut
15	MA-07963024250	1		Bushing
16	MA-F1550110020	4		Bolt
17	MA-11742201170	1		Bushing, Column
18	MA-27931515000	1		Washer
19	MA-07410004001	1		Ring
20	MA-07400002000	1		Ring
21		1		Hose Not used on this product
22	MA-08401022358	1		Oil Seal
23	MA-19632257000	2		Bolt
24	MA-A3030112002	2		Nut
25	MA-08301100160	4		O-Ring
26	MA-19682213000	2		Hose
27	MA-19672255AG0	1		Lever
28	MA-14212284000	1		Grip
29	MA-27932754001	1		Spring
30	MA-19632259000	1		Valve, Check
31	MA-08301100140	3		O-Ring
32	MA-19632225000	1		Bolt
33	MA-A0730124001	1		Nut
34		1		Ring Not used on this product
36	MA-19682238000	1		Rubber, Band
37	MA-A3030112002	1		Nut
38	MA-40520112060	1		Bolt
39	MA-19682235000	1		Shaft, Steering
44	MA-19642252AG0	1		Column
45	MA-19682265AG0	1	F	Column Brkt.
	MA-19682265AG1	1	F	Column Brkt.
46	MA-F1550110025	4		Bolt
47	MA-07961025200	2		Bushing
48	MA-19632267000	1		Bolt
49	MA-A3130101601	1		Nut
50	MA-05200140032	1		Pin,Split
52	MA-06313117130	2		Elbow Includes Item 31
55	MA-03500151430	1		Washer
56	MA-A3600101402	1		Washer
57	MA-A3030114002	1		Nut
	MA-10302216000	1		Steering Ass'y. Includes Items 58 & 59
58	MA-10302217000	1		Steering Wheel

www.mymowerparts.com

For Discount Cub Cadet Parts Call 606-678-9623 or 606-561-4983

Ref #	Part Number	Qty	S/P/F	Description
59	MA-10302218000	1		Center Pad
62	MA-19682267000	1	F	Bracket
63	MA-F1540108020	1	F	Bolt
69	MA-19632223000	1		Clamp
70	MA-F1540108020	1		Bolt
71	MA-07400102200	1		Ring
72	MA-07410003500	1		Ring
73	MA-07310002005	2		Liner t=0.5
74	MA-19672257000	1		Collar
75	MA-19672258000	1		Liner
76	MA-31223012001	1		Spring
77	MA-08301100200	2		O-Ring
78	MA-00511070070	1		Band, Wire
79		1		Clamp Not used on this product

www.mymowerparts.com

For Discount Cub Cadet Parts Call 606-678-9623 or 606-561-4983

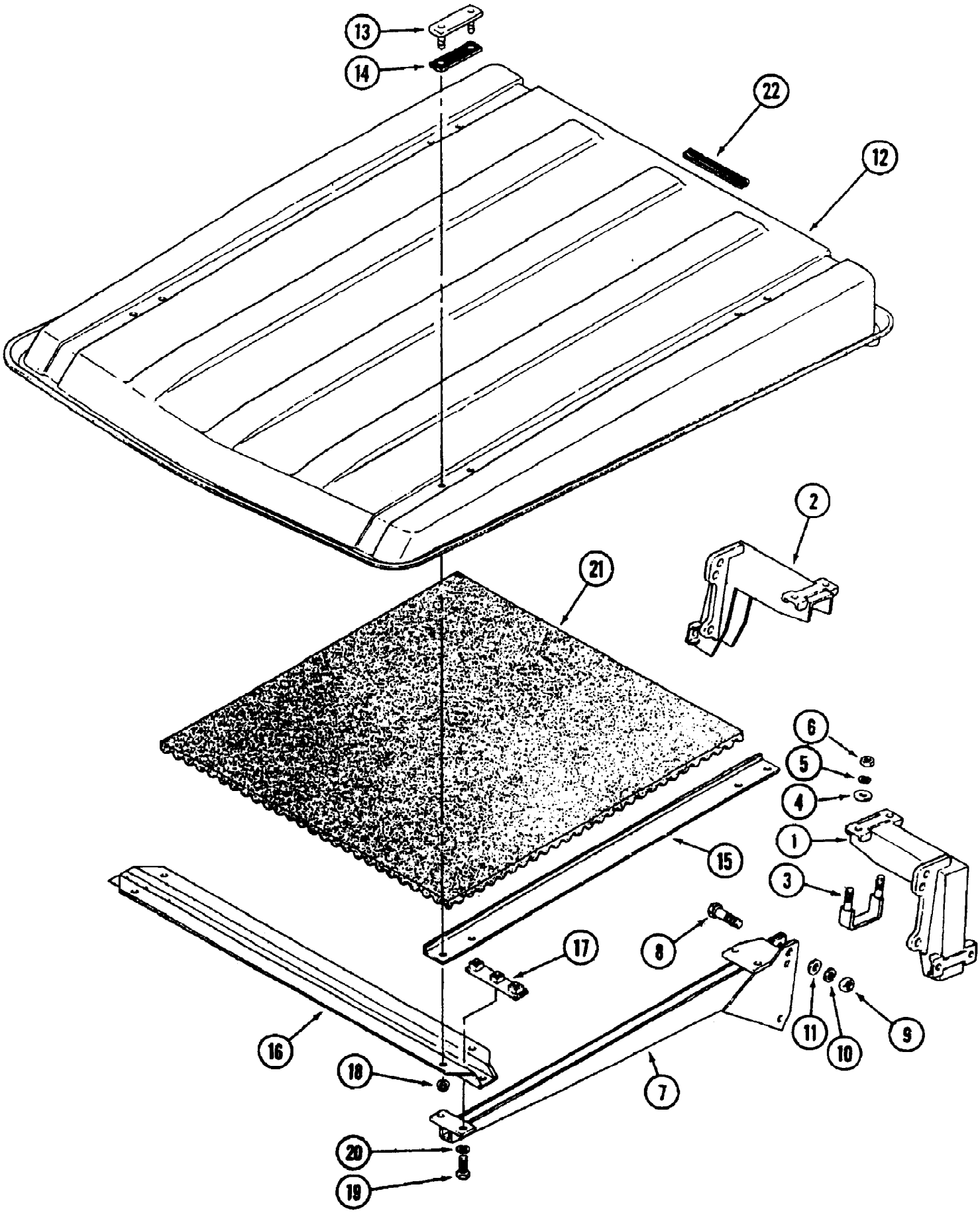

www.mymowerparts.com

For Discount Cub Cadet Parts Call 606-678-9623 or 606-561-4983

Ref #	Part Number	Qty	S/P/F	Description
1		1		Support L.H. Not Serviceable
2		1		Support R.H. Not Serviceable
3		4		U-Bolt Not Serviceable
4		8		Washer Not Serviceable
5		8		Washer Not Serviceable
6		8		Nut Not Serviceable
7		2		Frame Not Serviceable
8		4		Bolt Not Serviceable
9		4		Nut Not Serviceable
10		4		Washer Not Serviceable
11		4		Washer Not Serviceable
12		1		Roof Ass'y. Not Serviceable; Includes Items 21 & 22
13		4		Clamp, Roof Not Serviceable
14		4		Packing Not Serviceable
15		2		Plate Not Serviceable
16		2		Frame Not Serviceable
17		4		Clamp Not Serviceable
18		8		Nut Not Serviceable
19		12		Bolt Not Serviceable
20		20		Washer Not Serviceable
21		1		Cuthion Not Serviceable
22		1		Trim Not Serviceable

www.mymowerparts.com

For Discount Cub Cadet Parts Call 606-678-9623 or 606-561-4983

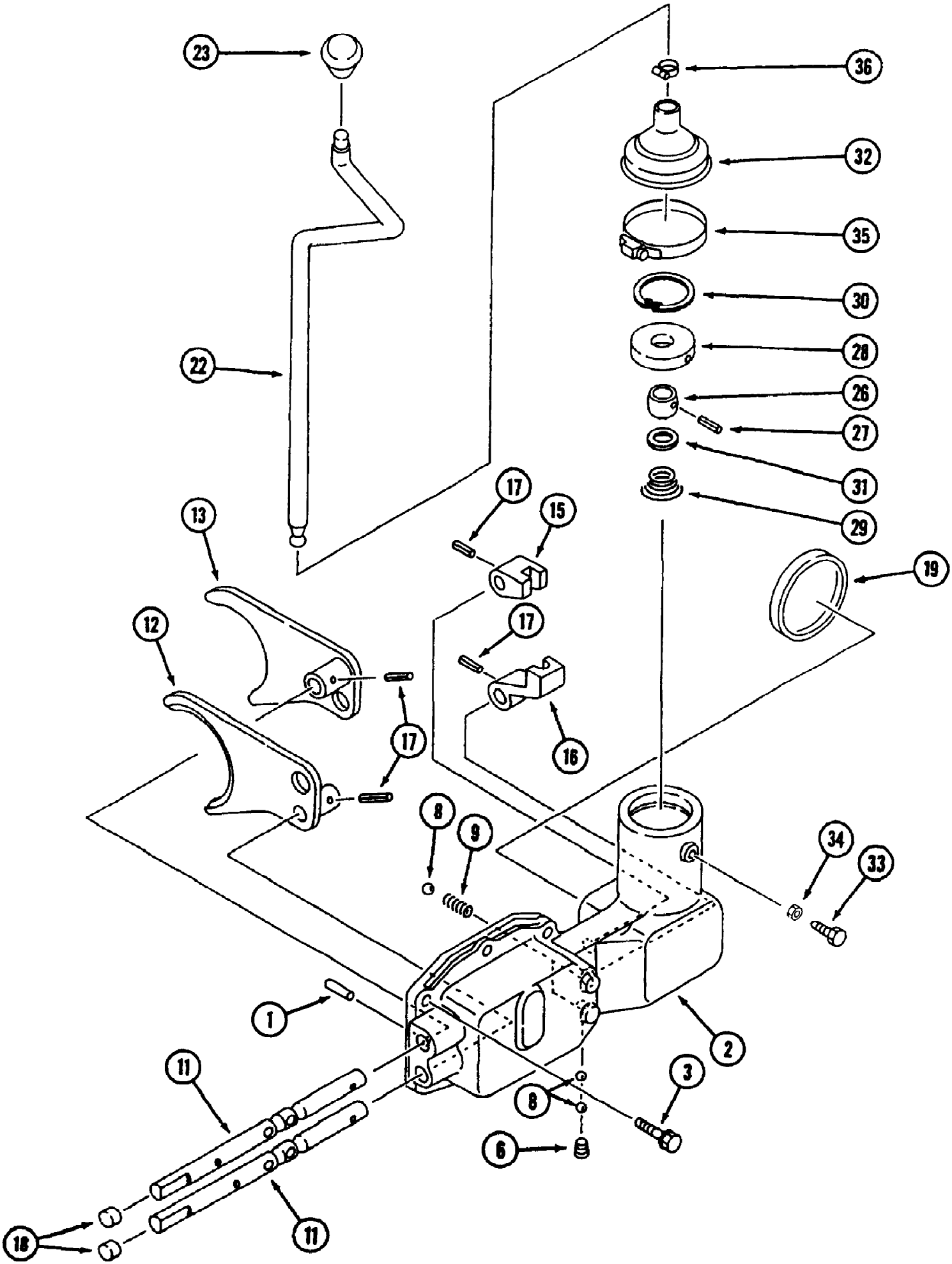

www.mymowerparts.com

For Discount Cub Cadet Parts Call 606-678-9623 or 606-561-4983

Ref #	Part Number	Qty	S/P/F	Description
1	MA-05401010020	2		Pin, Dowel
2	MA-19641701AG0	1		Cover, Control
3	MA-F1550110030	6		Bolt
6	MA-A6010A01300	1		Plug
8	MA-08000000900	4		Ball
9	MA-67428-01700	2		Spring
11	MA-19641702001	2		Rail,Shift
12	MA-19641704000	1		Fork, 1-3
13	MA-19641705000	1		Fork, 2-R
15	MA-19631715000	1		Adapter A
16	MA-19631716000	1		Adapter B
17	MA-05500006025	4		Pin, Spring
18	MA-08340016050	2		Seal, Cap
19	MA-08340080100	1		Seal, Cap
22	MA-19641707AG0	1		Lever, Main
23	MA-06930014460	1		Grip
26	MA-10311725000	1		Ball
27	MA-10311715000	1		Pin, Spring
28	MA-19631754000	1		Boss
29	MA-11931796000	1		Spring
30	MA-07410005501	1		Ring
31	MA-14152517000	1		Washer
32	MA-10311727000	1		Cover, Dust
33	MA-10311729000	1		Bolt
34	MA-A3010108002	1		Nut
35	MA-10311728000	1		Clamp
36	MA-00501100220	1		Clamp, Hose

www.mymowerparts.com

For Discount Cub Cadet Parts Call 606-678-9623 or 606-561-4983

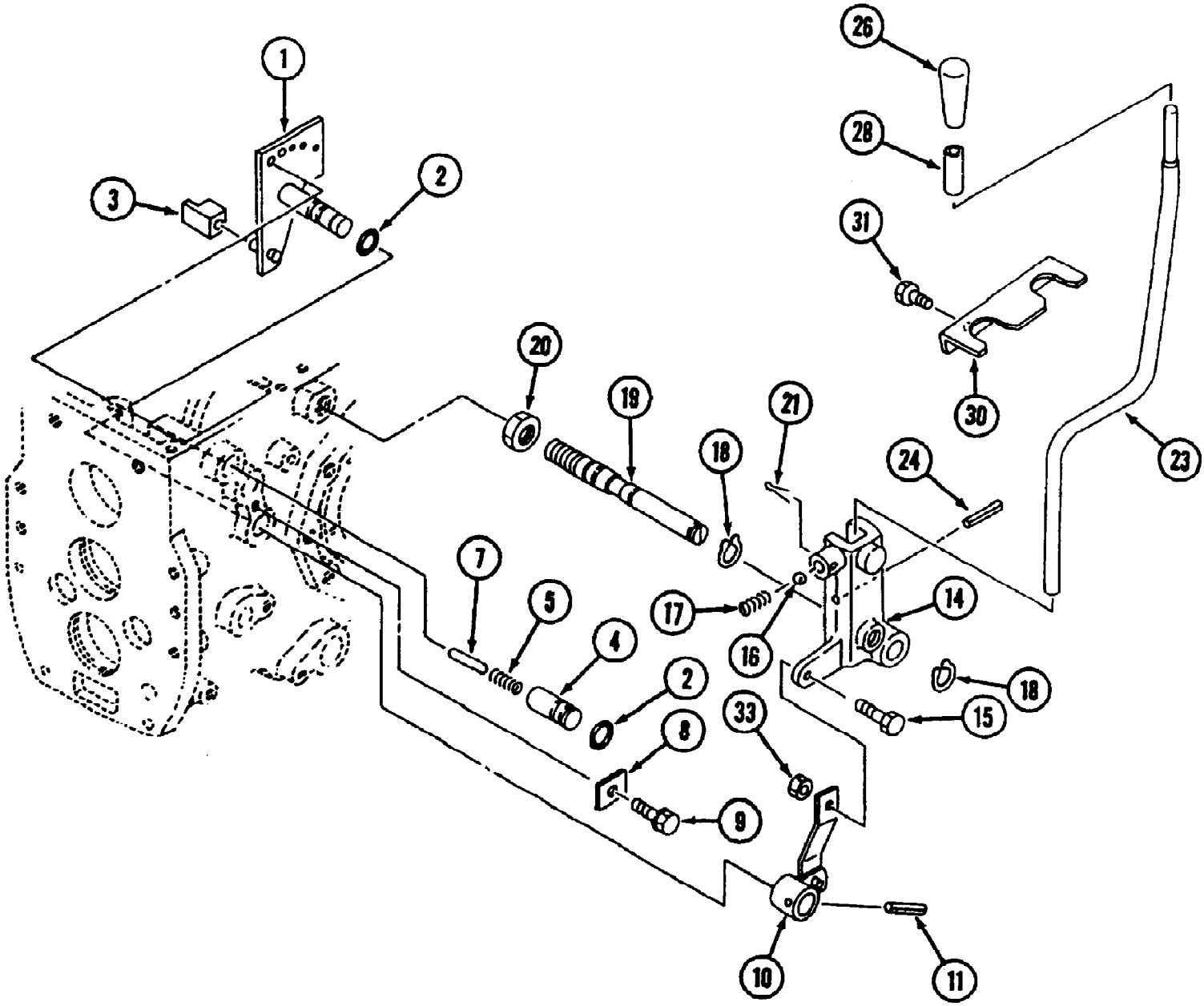

www.mymowerparts.com

For Discount Cub Cadet Parts Call 606-678-9623 or 606-561-4983

Ref #	Part Number	Qty	S/P/F	Description
1	MA-19641721001	1		Shifter, Range
2	MA-08300100160	2	/P	O-Ring
3	MA-19631722000	1		Piece, Shift
4	MA-19631723000	1		Boss
5	MA-67428-01700	1		Spring
7	MA-11741737000	1		Pin
8	MA-19631724000	1		Plate
9	MA-F1550110020	1		Bolt
10	MA-19641724AG0	1		Arm, Range
11	MA-10191734000	1		Pin
14	MA-19641729AG0	1		Bracket, Range
15	MA-A5142108020	1		Bolt
16	MA-08000000900	1		Ball
17	MA-67428-01700	1		Spring
18	MA-07400102000	2		Ring
19	MA-19641725000	1		Shaft
20	MA-A3030120001	1		Nut
21	MA-05200130032	1		Pin, Split
23	MA-19641726AG0	1		Lever, Range
24	MA-10311715000	1		Pin
26	MA-06910012250	1		Grip
28	MA-19632439000	1		Tube
30	MA-19641757AG0	1		Plate, Range
31	MA-A2520706012	2		Screw
33	MA-A3010108002	1		Nut

www.mymowerparts.com

For Discount Cub Cadet Parts Call 606-678-9623 or 606-561-4983

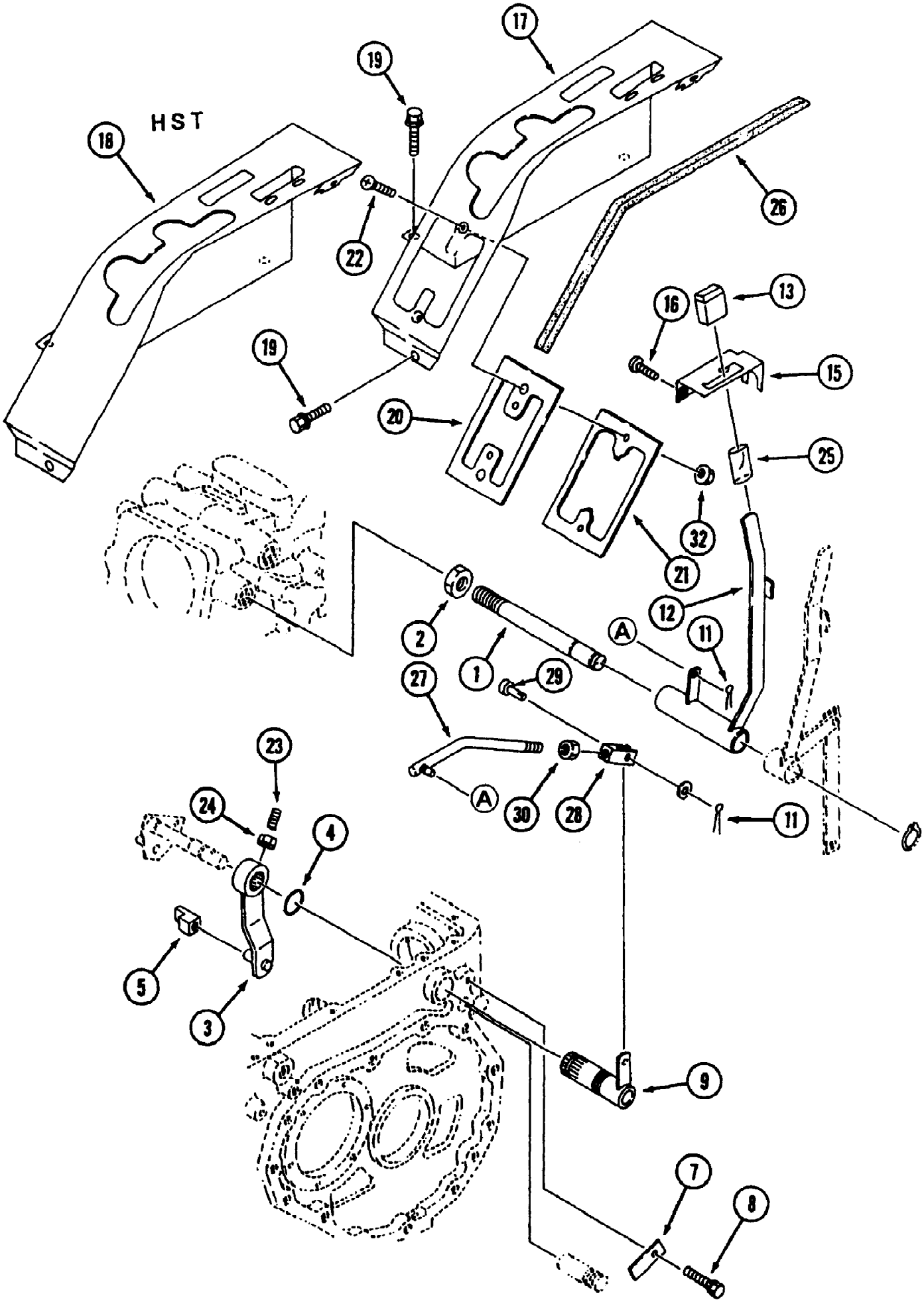

www.mymowerparts.com

For Discount Cub Cadet Parts Call 606-678-9623 or 606-561-4983

Ref #	Part Number	Qty	S/P/F	Description
1	MA-19641741000	1		Shaft, PTO Lever
2	MA-A3030120001	1		Nut
3	MA-19641742AG0	1	/P	Shifter,R PTO
4	MA-08300100210	1		O-Ring
5	MA-19631743000	1		Piece, Shift
7	MA-19631741000	1		Plate
8	MA-F1550110020	1		Bolt
9	MA-19641743AG0	1		Arm, Rear PTO
11	MA-05200125016	2	S	Pin, Split
	MA-19641748AG0	1		Lever, PTO Ass'y. Includes Items 12 & 25
12	MA-19641746AG0	1		Lever, Rear PTO
13	MA-19061731000	1		Grip
15	MA-19641747AG0	1		Plate, Rear PTO
16	MA-A2520706012	2		Screw
17	MA-19641749BD0	1		Lever, Guide L.H.
18		1		Lever, Guide L.H. Not used on this application
19	MA-H1540108016	4		Bolt
20	MA-19641755000	1		Guide, Rubber
21	MA-19641756AG0	1		Plate
22	MA-A2220105016	2		Screw
23	MA-HA130201000	1		Screw
24	MA-A3010108002	1		Nut
25	MA-19631658000	1		Tube
26	MA-19641752000	1		Cushion
27	MA-19641745000	1		Rod, RE PTO
28	MA-19041269000	1		Joint
29	MA-05620108025	1		Pin, Clevis
30	MA-A3030110002	1		Nut
32	MA-F3000105001	2		Nut

www.mymowerparts.com

For Discount Cub Cadet Parts Call 606-678-9623 or 606-561-4983

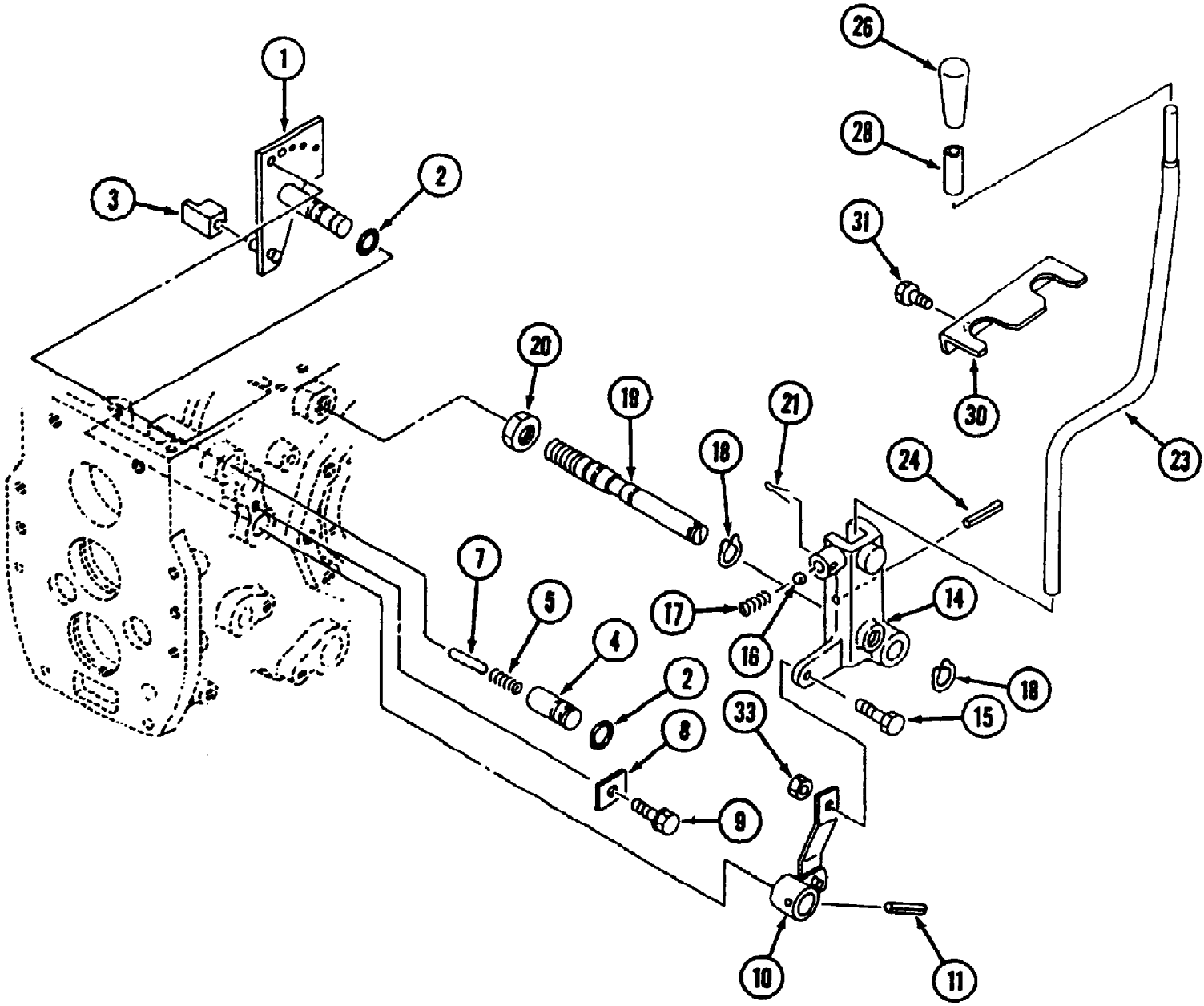

www.mymowerparts.com

For Discount Cub Cadet Parts Call 606-678-9623 or 606-561-4983

Ref #	Part Number	Qty	S/P/F	Description
1	MA-19641721001	1		Shifter, Range
2	MA-08300100160	2	/P	O-Ring
3	MA-19631722000	1		Piece, Shift
4	MA-19631723000	1		Boss
5	MA-67428-01700	1		Spring
7	MA-11741737000	1		Pin
8	MA-19631724000	1		Plate
9	MA-F1550110020	1		Bolt
10	MA-19641724AG0	1		Arm, Range
11	MA-10191734000	1		Pin
14	MA-19641729AG0	1		Bracket, Range
15	MA-A5142108020	1		Bolt
16	MA-08000000900	1		Ball
17	MA-67428-01700	1		Spring
18	MA-07400102000	2		Ring
19	MA-19641725000	1		Shaft
20	MA-A3030120001	1		Nut
21	MA-05200130032	1		Pin, Split
23	MA-19641726AG0	1		Lever, Range
24	MA-10311715000	1		Pin
26	MA-06910012250	1		Grip
28	MA-19632439000	1		Tube
30	MA-19641757AG0	1		Plate, Range
31	MA-A2520706012	2		Screw
33	MA-A3010108002	1		Nut

www.mymowerparts.com

For Discount Cub Cadet Parts Call 606-678-9623 or 606-561-4983

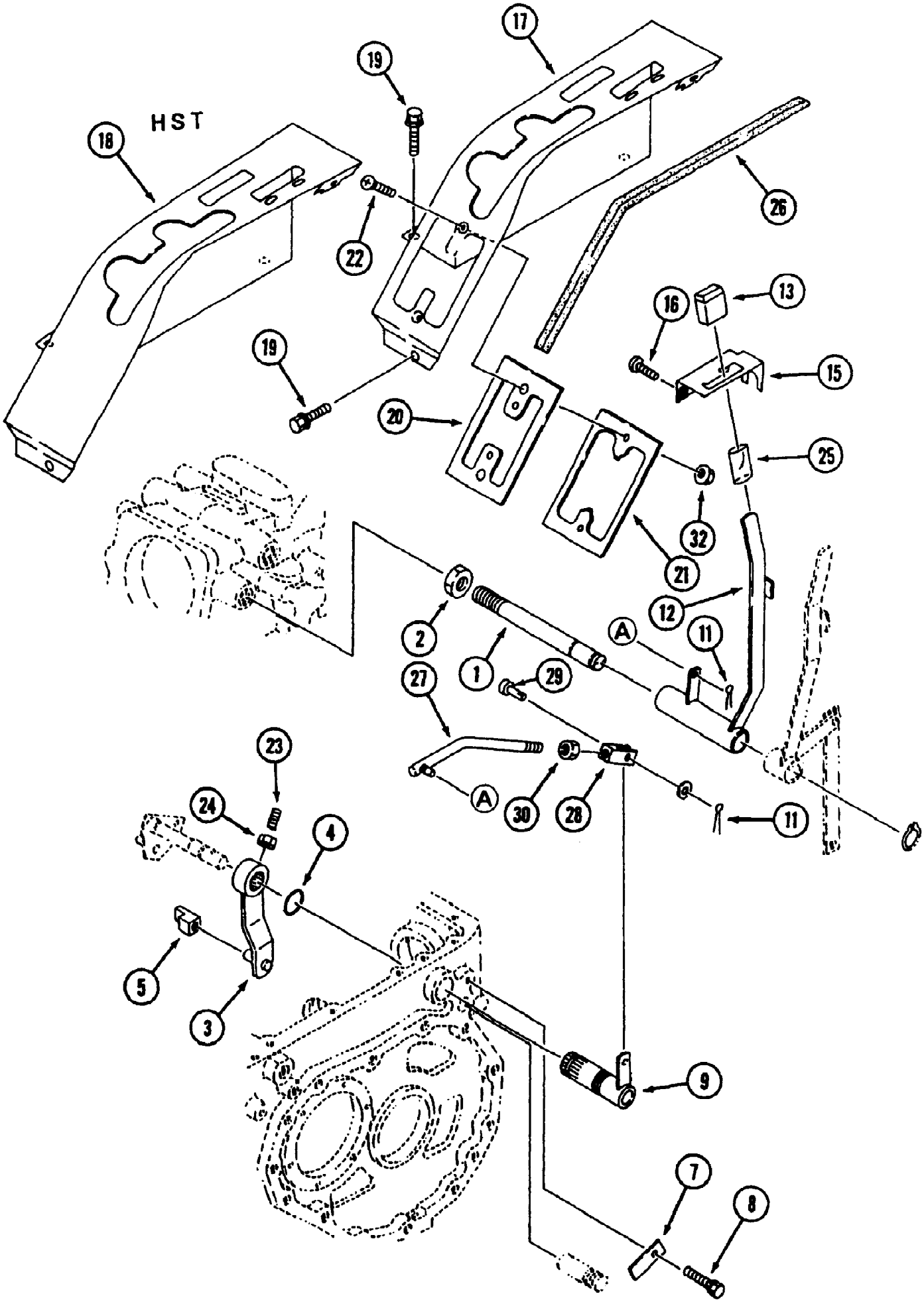

www.mymowerparts.com

For Discount Cub Cadet Parts Call 606-678-9623 or 606-561-4983

Ref #	Part Number	Qty	S/P/F	Description
1	MA-19641741000	1		Shaft,PTO Lever
2	MA-A3030120001	1		Nut
3	MA-19641742AG0	1	/P	Shifter,R PTO
4	MA-08300100210	1		O-Ring
5	MA-19631743000	1		Piece, Shift
7	MA-19631741000	1		Plate
8	MA-F1550110020	1		Bolt
9	MA-19641743AG0	1		Arm, Rear PTO
11	MA-05200125016	2	S	Pin, Split
	MA-19641748AG0	1		Lever, PTO Ass'y. Includes Items 12 & 25
12	MA-19641746AG0	1		Lever, Rear PTO
13	MA-19061731000	1		Grip
15	MA-19641747AG0	1		Plate, Rear PTO
16	MA-A2520706012	2		Screw
17		1		Lever, Guide L.H. Not used on this application
18	MA-19641751BD0	1		Lever, Guide L.H.
19	MA-H1540108016	4		Bolt
20		1		Guide, Rubber Not used on this application
21		1		Plate Not used on this application
22		1		Screw Not used on this application
23	MA-HA130201000	1		Screw
24	MA-A3010108002	1		Nut
25	MA-19631658000	1		Tube
26	MA-19641752000	1		Cushion
27	MA-19641745000	1		Rod, RE PTO
28	MA-19041269000	1		Joint
29	MA-05620108025	1		Pin, Clevis
30	MA-A3030110002	1		Nut
32		1		Nut Not used on this application

www.mymowerparts.com

For Discount Cub Cadet Parts Call 606-678-9623 or 606-561-4983

Timing Parts 30 HP Engine (7300 S/N 21932-Lower/7305 S/N 23069-Lower)

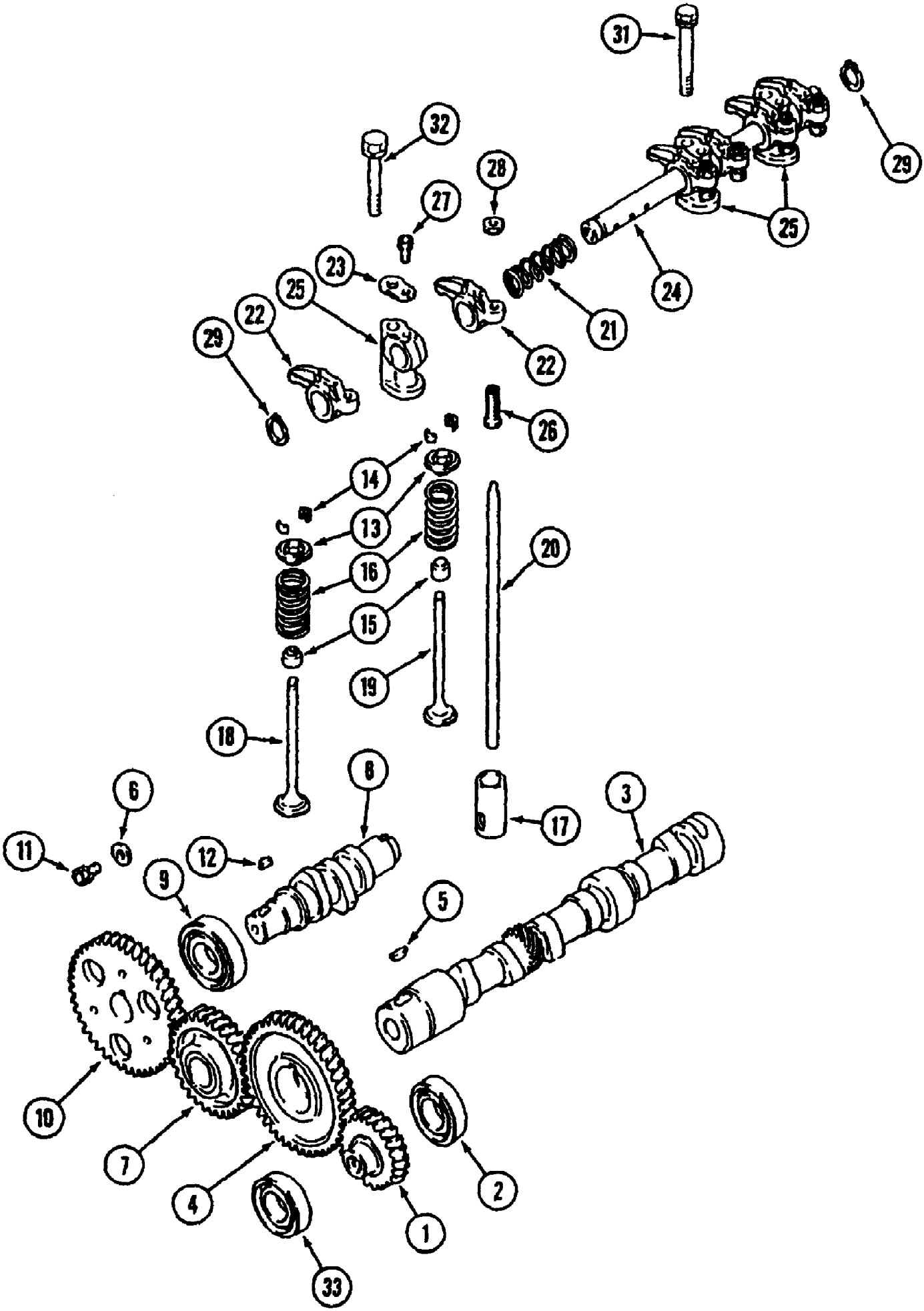

www.mymowerparts.com

For Discount Cub Cadet Parts Call 606-678-9623 or 606-561-4983

Timing Parts 30 HP Engine (7300 S/N 21932-Lower/7305 S/N 23069-Lower)

Ref #	Part Number	Qty	S/P/F	Description
1	MA-30A26-00500	1		Gear, Press. Oil Pump
2	MA-30A26-00200	1		Bearing, Ball
3	MA-30H05-00102	1		Camshaft
4	MA-MM406722	1		Gear, Camshaft
5	MA-MF476215	1		Key, Woodruff
6	MA-03500140818	1		Washer
7	MA-MM406661	1		Gear Ass'y., Idler
8	MA-MM431415	1		Shaft, Fuel Injection Pump Comp.
9	MA-MD703856	1		Bearing, Ball
10	MA-MM406685	1		Gear, Fuel Injection Pump Comp.
11	MA-MF241251	1		Bolt, W/Washer
12	MA-MF476018	1		Key
13	MA-MD008761	6		Retainer, Valve Spring
14	MA-MD008760	12		Lock, Valve Spring Retainer
15	MA-MM413060	6		Seal, Valve Stem
16	MA-MM432350	6		Spring, Valve
17	MA-MM402737	6	S	Tappet
18	MA-MM433495	3	S	Valve, Intake
19	MA-MM433496	3	S	Valve, Exhaust
20	MA-K7331230	6		Rod, Push
21	MA-MD000963	2		Spring, Rocker Shaft-L.H.
22	MA-MM406732	6		Arm, Rocker
23	MA-MM406745	2		Washer, Seat
24	MA-MM435527	1		Shaft Ass'y., Rocker
25	MA-MM413043	3		Stay, Rocker
26	MA-K7231220	6		Screw, Adjusting
27	MA-MF241225	2		Bolt, W/Washer
28	MA-MF430726	6	S	Nut, Jam
29	MA-07400001900	2	/P	Snap Ring
31	MA-MF244891	1		Bolt, W/Washer
32	MA-MF241293	2		Bolt, W/Washer
33	MA-MD712517	1		Bearing, Ball

www.mymowerparts.com

For Discount Cub Cadet Parts Call 606-678-9623 or 606-561-4983

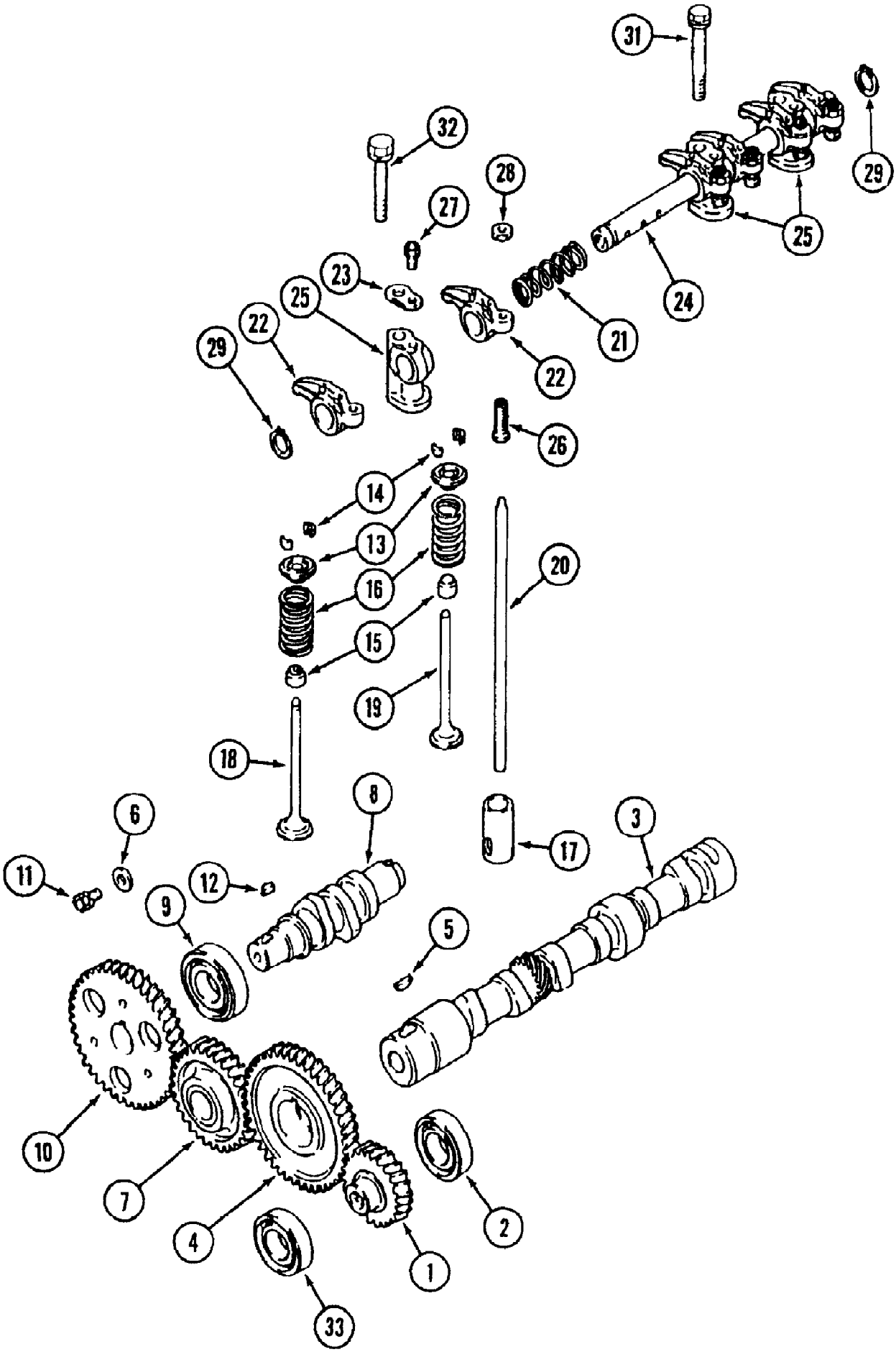

www.mymowerparts.com

For Discount Cub Cadet Parts Call 606-678-9623 or 606-561-4983

Timing Parts 30HP Engine 7300 S/N 21933 & Up

Ref #	Part Number	Qty	S/P/F	Description
1	MA-30A26-00500	1		Gear, Pressure Oil Pump
2	MA-30A26-00200	1		Bearing, Ball
3	MA-30H05-00102	1		Camshaft
4	MA-MM406722	1		Gear, Camshaft
5	MA-MF476215	1		Key, Woodruff
6	MA-MD000425	1	S	Washer
7	MA-MM406661	1		Gear Ass'y., Idler
8	MA-MM431415	1		Shaft, Fuel Injection Pump
9	MA-MD703856	1		Bearing, Ball
10	MA-30H65-08100	1		Gear, Fuel Injection Pump
11	MA-MF241251	1		Bolt, w/Washer
12	MA-MF476018	1		Key
13	MA-MD008761	6		Retainer, Valve Spring
14	MA-MD008760	12		Retainer Lock, Valve Spring
15	MA-MM413060	6		Seal, Valve Stem
16		1		UNKNOWN
17	MA-MM402737	6	S	Tappet
18	MA-MM433495	3	S	Valve, Intake
19	MA-MM433496	3	S	Valve, Exhaust
20	MA-K7331230	6		Rod, Push
21	MA-MD000963	2		Spring, Rocker Shaft LH
22	MA-MM406732	6		Arm, Rocker
23	MA-MM406745	2		Washer
24	MA-MM435527	1		Shaft Ass'y., Rocker
25	MA-MM413043	3		Stay, Rocker
26	MA-K7231220	6		Screw, Adjusting
27	MA-MF241225	2		Bolt, w/Washer
28	MA-MF430726	6	S	Nut, Jam
29	MA-07400001900	2	/P	Snap Ring
31	MA-MF244891	1		Bolt, w/Washer
32	MA-MF241293	2		Bolt, w/Washer
33	MA-MD712517	1		Bearing, Rear

www.mymowerparts.com

For Discount Cub Cadet Parts Call 606-678-9623 or 606-561-4983

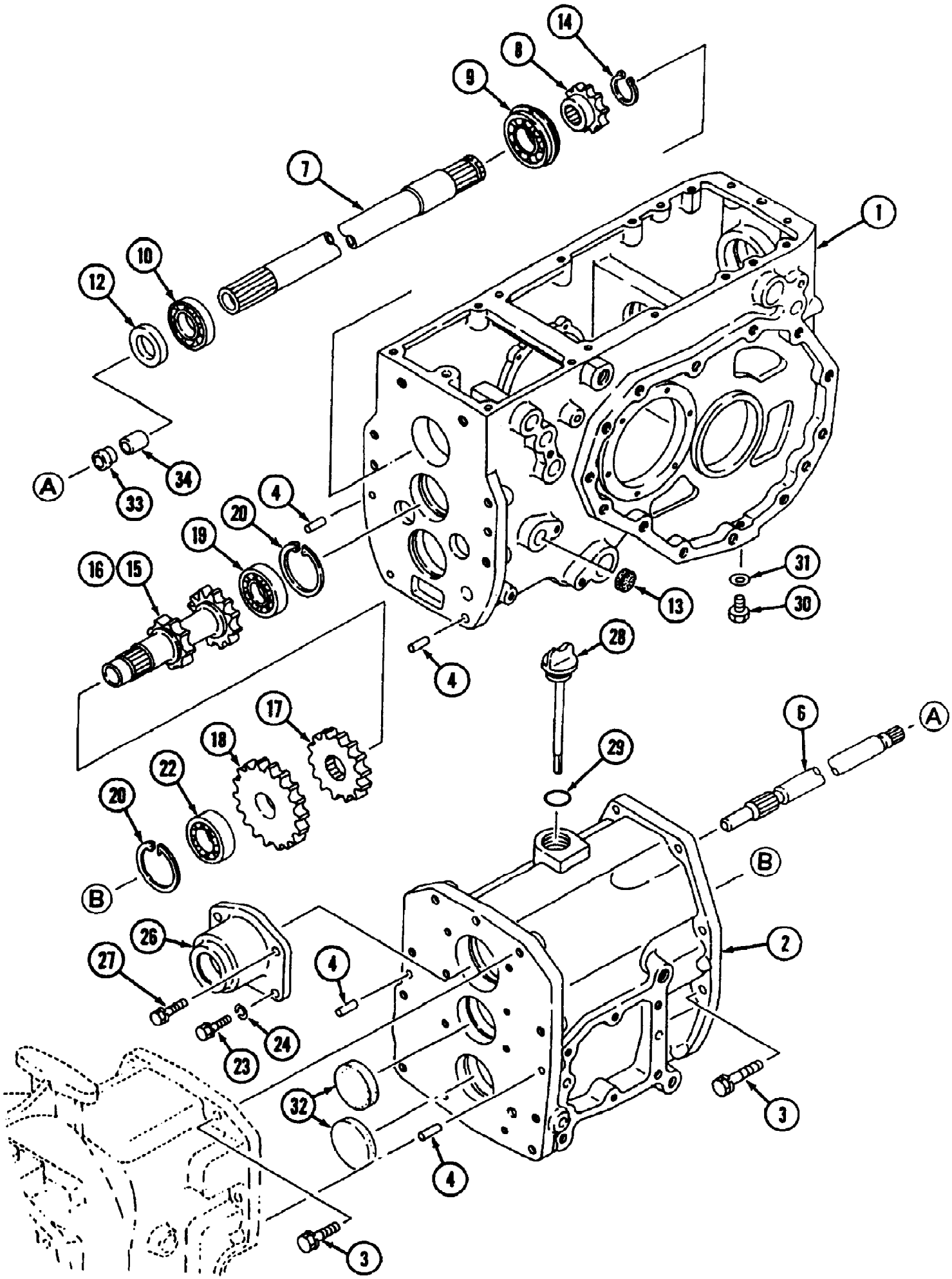

www.mymowerparts.com

For Discount Cub Cadet Parts Call 606-678-9623 or 606-561-4983

Ref #	Part Number	Qty	S/P/F	Description
1	MA-19641211AG2	1		Case, T/M(STD)
2	MA-19641213AG1	1		Case, Center
	MA-19641213AG3	1		Case, Center Replaces MA-19641213AG1 when inventory is depleted
3	MA-F1540112035	16		Bolt
4	MA-05401010020	4		Pin, Dowel
6	MA-19641214000	1		Shaft, Main
7	MA-19641216000	1		Shaft, Drive
8	MA-19641217000	1		Gear, 20T
9	MA-07500062075	1		Bearing
10	MA-07500560074	1		Bearing
12	MA-08401035508	1		Seal, Oil
13	MA-08340020070	1		Seal, Cap
14	MA-07400103500	1	/P	Ring
15	MA-19641273000	1		Gear, 19-24T
16		1		Gear, 19-24T Not used on this product
17	MA-19641219000	1		Gear, 29T
18	MA-19641221000	1		Gear, 34T
19	MA-07500062060	1		Bearing
20	MA-07410006200	2		Ring
22	MA-07520662060	1		Bearing
23	MA-69542-64700	2		Bolt
24	MA-A3600101002	2	/P	Washer
26	MA-19641261000	1		Cover
27	MA-F1550110030	2		Bolt
28	MA-19831734001	1		Plug, Oiling
29	MA-08300100280	1		O-Ring
30	MA-F5000-16000	2		Plug
31	MA-08331001600	2		Seal, Washer
32	MA-08340062100	2		Seal, Cap
33	MA-19631276000	1		Seal, Oil
34	MA-07963020200	1		Bushing

www.mymowerparts.com

For Discount Cub Cadet Parts Call 606-678-9623 or 606-561-4983

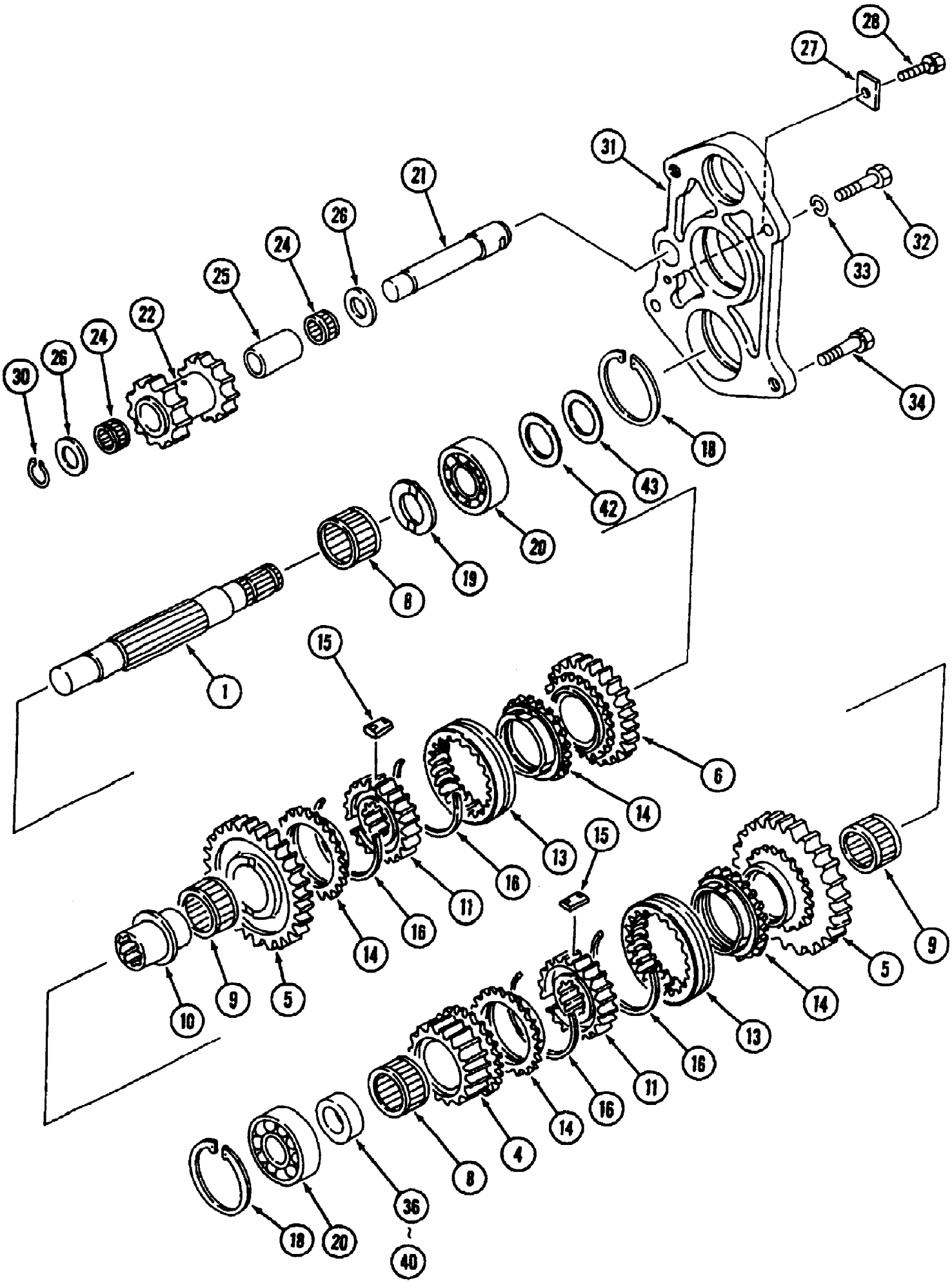

www.mymowerparts.com

For Discount Cub Cadet Parts Call 606-678-9623 or 606-561-4983

Ref #	Part Number	Qty	S/P/F	Description
1	MA-19641222000	1		Shaft, Main Change
4	MA-19641223000	1		Gear, 267
5	MA-19641224000	2		Gear, 35T
6	MA-19641226000	1		Gear, 31T
8	MA-07802293427	2		Bearing
9	MA-07802404527	2		Bearing
10	MA-11741256000	1		Retainer (B)
11	MA-10311286001	2		Hub
13	MA-69526-01100	2		Sleeve
14	MA-68226-03500	4		Ring
15	MA-68226-03600	6		Piece
16	MA-68226-03700	4		Spring
18	MA-07410006200	2		Ring
19	MA-10301328000	1		Liner
20	MA-07500063050	2		Bearing
21	MA-19641227000	1		Shaft, Reverse
22	MA-19641228000	1		Gear, 17-18T
24	MA-07802202617	2		Bearing
25	MA-19641229000	1		Collar
26	MA-13521406000	2		Liner
27	MA-10311328000	1		Plate
28	MA-F1540108020	1		Bolt
30	MA-07400002000	1		Ring
31	MA-19641231000	1		Cover
32	MA-69542-64700	2		Bolt
33	MA-A3600101002	2	/P	Washer
34	MA-F1550110030	2		Bolt
	MA-19641265001	1		Collar Set Includes Items 36 - 40
36	MA-19641283000	(1)		Collar Use one of these. Use MA-19641283001 when inventory is depleted.
37	MA-19641266000	(1)		Collar Use one of these. Use MA-19641266001 when inventory is depleted.
38	MA-19641267000	(1)		Collar Use one of these. Use MA-19641267001 when inventory is depleted.
39	MA-19641268000	(1)		Collar Use one of these. Use MA-19641268001 when inventory is depleted.
40	MA-19641269000	(1)		Collar Use one of these. Use MA-19641269001 when inventory is depleted.
	MA-10211318000	1		Liner Set Includes Items 42 & 43
42	MA-07300006202	AR		Liner
43	MA-07300006204	AR		Liner

www.mymowerparts.com

For Discount Cub Cadet Parts Call 606-678-9623 or 606-561-4983

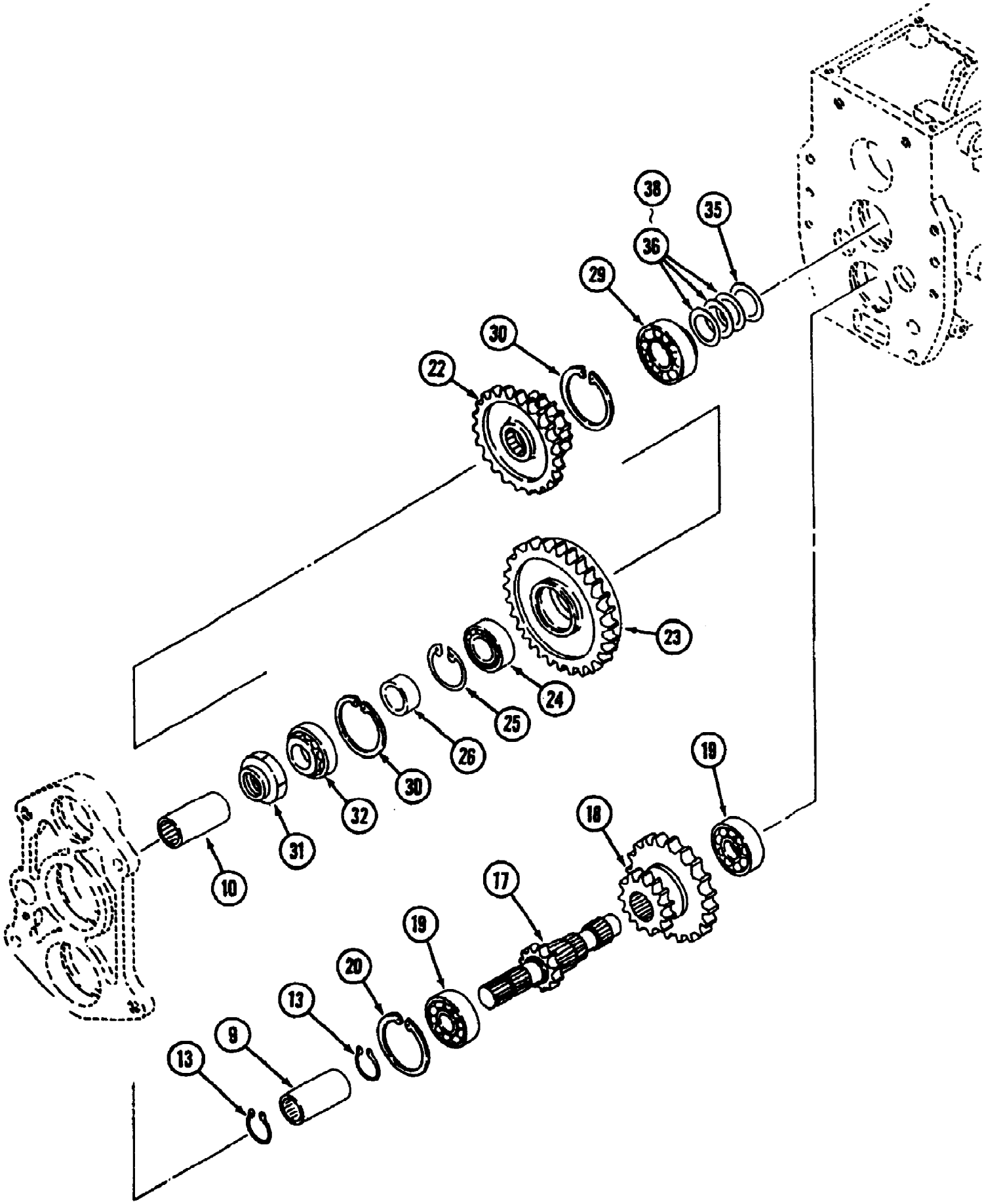

www.mymowerparts.com

For Discount Cub Cadet Parts Call 606-678-9623 or 606-561-4983

Ref #	Part Number	Qty	S/P/F	Description
9	MA-67426-01500	1		Coupling
10		1		Joint Not used on this product
13	MA-07400002500	2	/P	Ring
17	MA-19641238000	1		Shaft, Sub Change
18	MA-19641239000	1		Gear, 23-36T
19	MA-07500063050	2		Bearing
20	MA-07410006200	1		Ring
22	MA-19641241000	1		Gear, 19-32T
23	MA-19641242000	1		Gear, 43T
24	MA-07500062050	1		Bearing
25	MA-07410005201	1	/P	Ring
26	MA-19641243000	1		Collar
29	MA-07700132206	1		Bearing
30	MA-07410006200	2		Ring
31	MA-11741273000	1		Nut(M25)
32	MA-07700130305	1		Bearing
	MA-10211321000	1		Shim Set Includes Items 35 - 38
35	MA-67700-30600	1		Shim
36	MA-67700-30300	AR		Shim
37	MA-67700-30400	AR		Shim
38	MA-67700-30500	AR		Shim

www.mymowerparts.com

For Discount Cub Cadet Parts Call 606-678-9623 or 606-561-4983

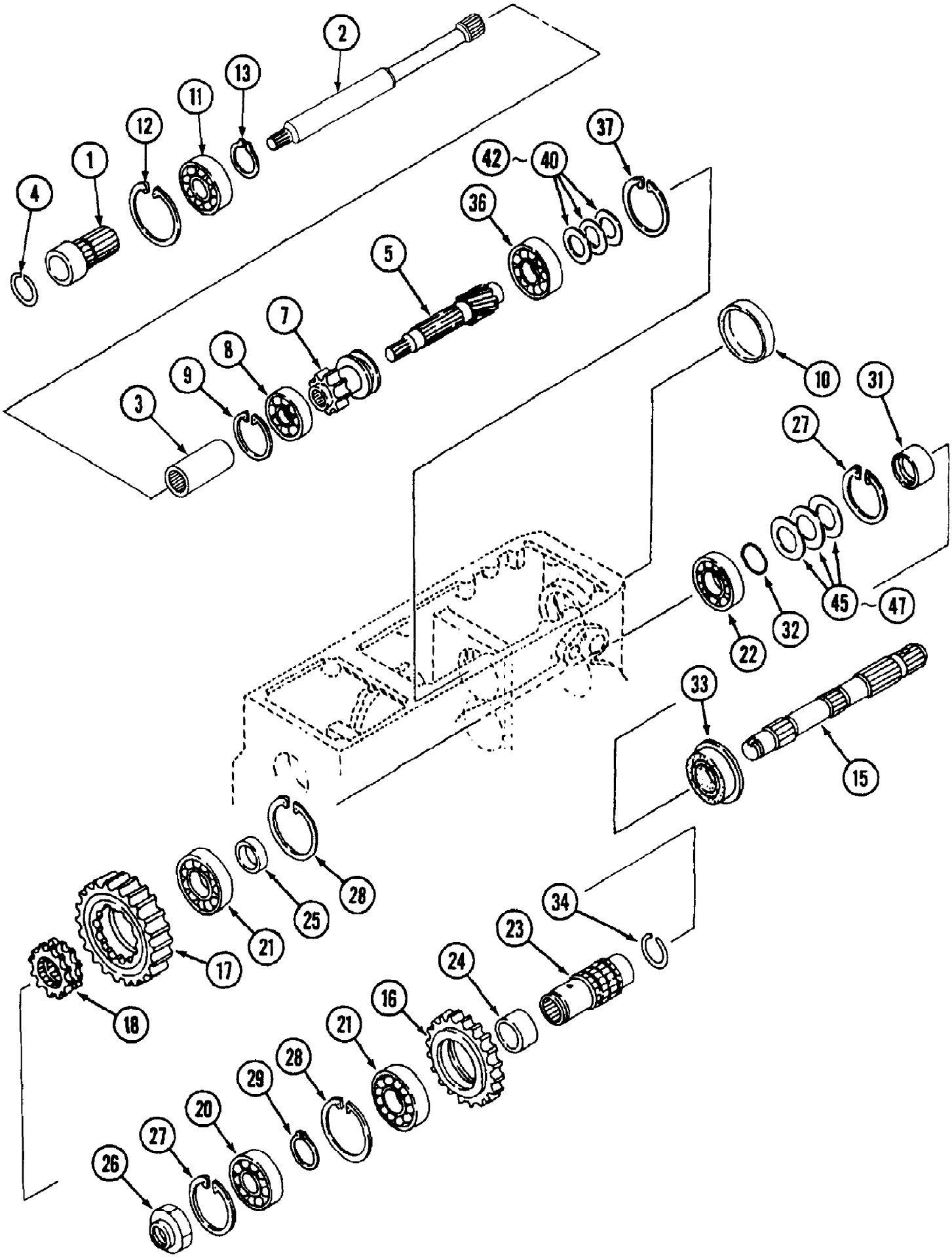

www.mymowerparts.com

For Discount Cub Cadet Parts Call 606-678-9623 or 606-561-4983

Ref #	Part Number	Qty	S/P/F	Description
1	MA-19631275000	1		Joint
2	MA-19641246000	1	F	Shaft
	MA-19681246000	1	F	Shaft
3	MA-10251922000	1	S/F	Collar
	MA-10231915000	1	S/F	Joint
4	MA-10311363001	1		Ring
5	MA-19681247000	1	F	Shaft, PTO
	MA-19681247001	1	F	Shaft, PTO
7	MA-19641248001	1	/P	Gear, 19T
8	MA-07520663050	1		Bearing
9	MA-07410006200	1		Ring
10	MA-08340072100	1		Seal, Cap
11	MA-07500060050	1		Bearing
12	MA-07410004701	1	/P	Ring
13	MA-07400002500	1	/P	Ring
15	MA-19641249000	1		Shaft, PTO Drive
16	MA-19641251000	1		Gear, 46T
17	MA-19681252000	1		Gear, 44T
18	MA-19631249000	1		Gear, Clutch
20	MA-07520663050	1		Bearing
21	MA-07500062070	2		Bearing
22	MA-07520662060	1		Bearing
23	MA-19641254000	1		Boss, Spline
24	MA-19631252000	1		Collar
25	MA-19641253000	1		Collar
26	MA-11741273000	1		Nut (M25)
27	MA-07410006200	2		Ring
28	MA-07410007201	2		Ring
29	MA-07400003500	1	S	Ring
31	MA-10251405000	1		Bushing
32	MA-08300100300	1		O-Ring
33	MA-10211314000	1		Seal,Oil
34	MA-19631253000	1		Ring
36	MA-07520663060	1		Bearing
37	MA-07410007201	1		Ring
	MA-19641281000	1		Liner Set Includes Items 40 - 42
40	MA-07300007202	AR		Liner t=0.2
41	MA-07300007204	AR		Liner t=0.4
42	MA-07300007208	AR		Liner t=0.8
	MA-10211318000	1		Liner Set Includes Items 45 - 47
45	MA-07300006201	AR		Liner t=0.15
46	MA-07300006204	AR		Liner t=0.4
47	MA-07300006208	AR		Liner t=0.8

www.mymowerparts.com

For Discount Cub Cadet Parts Call 606-678-9623 or 606-561-4983

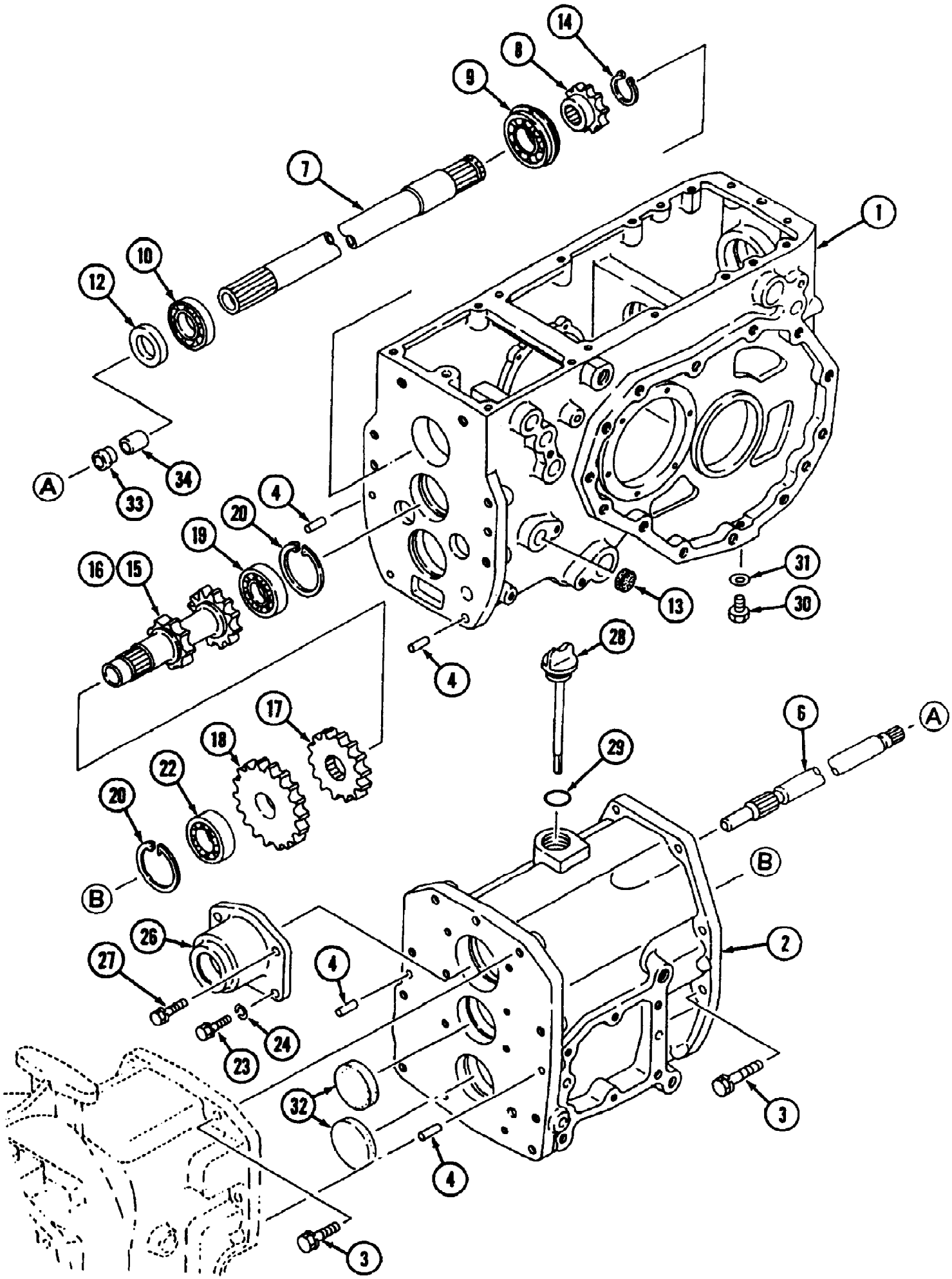

www.mymowerparts.com

For Discount Cub Cadet Parts Call 606-678-9623 or 606-561-4983

Ref #	Part Number	Qty	S/P/F	Description
1	MA-19641211AG2	1		Case, T/M(STD)
2	MA-19641213AG1	1		Case, Center
	MA-19641213AG3	1		Case, Center Replaces MA-19641213AG1 when inventory is depleted
3	MA-F1540112035	16		Bolt
4	MA-05401010020	4		Pin, Dowel
6	MA-19641214000	1		Shaft, Main
7	MA-19641216000	1		Shaft, Drive
8	MA-19641217000	1		Gear, 20T
9	MA-07500062075	1		Bearing
10	MA-07500560074	1		Bearing
12	MA-08401035508	1		Seal, Oil
13	MA-08340020070	1		Seal, Cap
14	MA-07400103500	1	/P	Ring
15		1		Gear, 19-24T Not used on this product
16	MA-19641218000	1		Gear, 19-24T
17	MA-19641219000	1		Gear, 29T
18	MA-19641221000	1		Gear, 34T
19	MA-07500062060	1		Bearing
20	MA-07410006200	2		Ring
22	MA-07520662060	1		Bearing
23		1		Bolt Not used on this product
24		1		Washer Not used on this product
26		1		Cover Not used on this product
27		1		Bolt Not used on this product
28	MA-19831734001	1		Plug, Oiling
29	MA-08300100280	1		O-Ring
30	MA-F5000-16000	2		Plug
31	MA-08331001600	2		Seal, Washer
32		1		Seal, Cap Not used on this product
33	MA-19631276000	1		Seal, Oil
34	MA-07963020200	1		Bushing

www.mymowerparts.com

For Discount Cub Cadet Parts Call 606-678-9623 or 606-561-4983

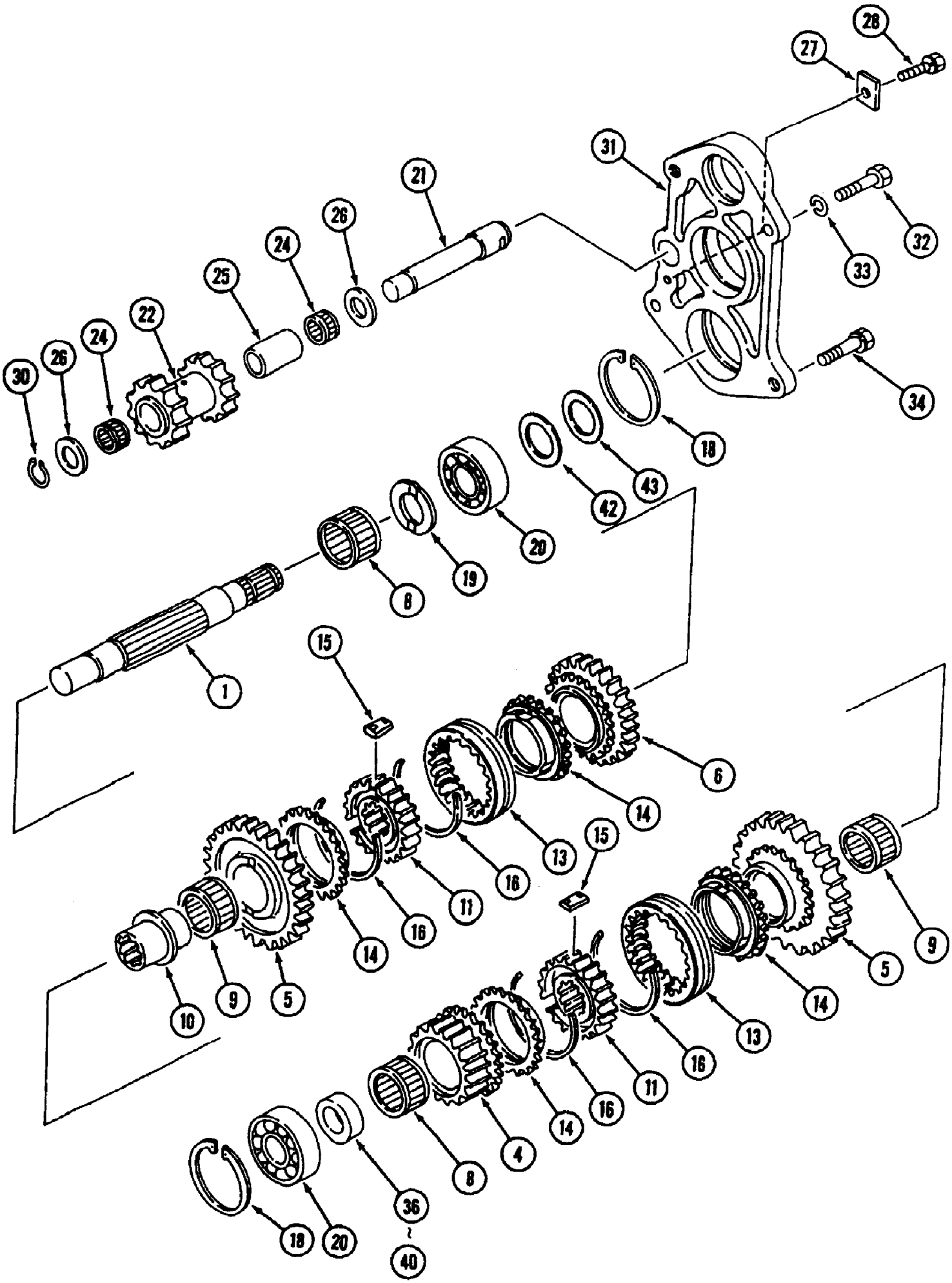

www.mymowerparts.com

For Discount Cub Cadet Parts Call 606-678-9623 or 606-561-4983

Ref #	Part Number	Qty	S/P/F	Description
1	MA-19641222000	1		Shaft, Main Change
4	MA-19641223000	1		Gear, 26T
5	MA-19641224000	2		Gear, 35T
6	MA-19641226000	1		Gear, 31T
8	MA-07802293427	2		Bearing
9	MA-07802404527	2		Bearing
10	MA-11741256000	1		Retainer(B)
11	MA-10311286001	2		Hub
13	MA-69526-01100	2		Sleeve
14	MA-68226-03500	4		Ring
15	MA-68226-03600	6		Piece
16	MA-68226-03700	4		Spring
18	MA-07410006200	2		Ring
19	MA-10301328000	1		Liner
20	MA-07500063050	2		Bearing
21	MA-19641227000	1		Shaft, Reverse
22	MA-19641228000	1		Gear, 17-18T
24	MA-07802202617	2		Bearing
25	MA-19641229000	1		Collar
26	MA-13521406000	2		Liner
27	MA-10311328000	1		Plate
28	MA-F1540108020	1		Bolt
30	MA-07400002000	1		Ring
31	MA-19641231000	1		Cover
32	MA-69542-64700	2		Bolt
33	MA-A3600101002	2	/P	Washer
34	MA-F1550110030	2		Bolt
	MA-19641265001	1		Collar Set Includes Items 36 - 40
36	MA-19641283000	(1)		Collar Use one of these. Use MA-19641283001 when inventory is depleted.
37	MA-19641266000	(1)		Collar Use one of these. Use MA-19641266001 when inventory is depleted.
38	MA-19641267000	(1)		Collar Use one of these. Use MA-19641267001 when inventory is depleted.
39	MA-19641268000	(1)		Collar Use one of these. Use MA-19641268001 when inventory is depleted.
40	MA-19641269000	(1)		Collar Use one of these. Use MA-19641269001 when inventory is depleted.
	MA-10211318000	1		Liner Set Includes Items 42 & 43
42	MA-07300006202	AR		Liner
43	MA-07300006204	AR		Liner

www.mymowerparts.com

For Discount Cub Cadet Parts Call 606-678-9623 or 606-561-4983

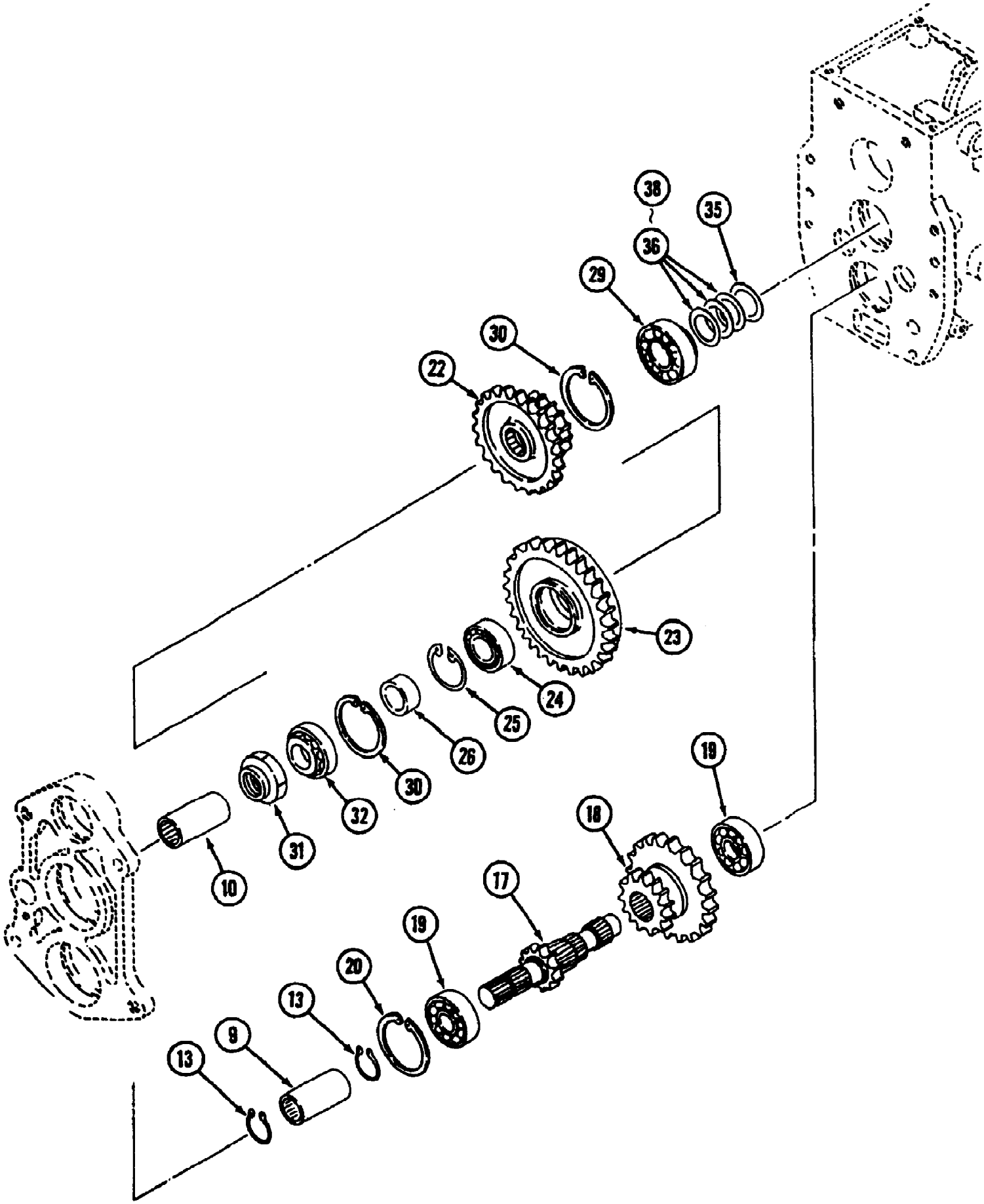

www.mymowerparts.com

For Discount Cub Cadet Parts Call 606-678-9623 or 606-561-4983

Ref #	Part Number	Qty	S/P/F	Description
9	MA-67426-01500	1		Coupling
10	MA-19631232000	1		Joint
13	MA-07400002500	2	/P	Ring
17	MA-19641238000	1		Shaft, Sub Change
18	MA-19641239000	1		Gear, 23-36T
19	MA-07500063050	2		Bearing
20	MA-07410006200	1		Ring
22	MA-19641241000	1		Gear, 19-32T
23	MA-19641242000	1		Gear, 43T
24	MA-07500062050	1		Bearing
25	MA-07410005201	1	/P	Ring
26	MA-19641243000	1		Collar
29	MA-07700132206	1		Bearing
30	MA-07410006200	2		Ring
31	MA-11741273000	1		Nut(M25)
32	MA-07700130305	1		Bearing
	MA-10211321000	1		Shim Set Includes Items 35 - 38
35	MA-67700-30600	1		Shim
36	MA-67700-30300	AR		Shim
37	MA-67700-30400	AR		Shim
38	MA-67700-30500	AR		Shim

www.mymowerparts.com

For Discount Cub Cadet Parts Call 606-678-9623 or 606-561-4983

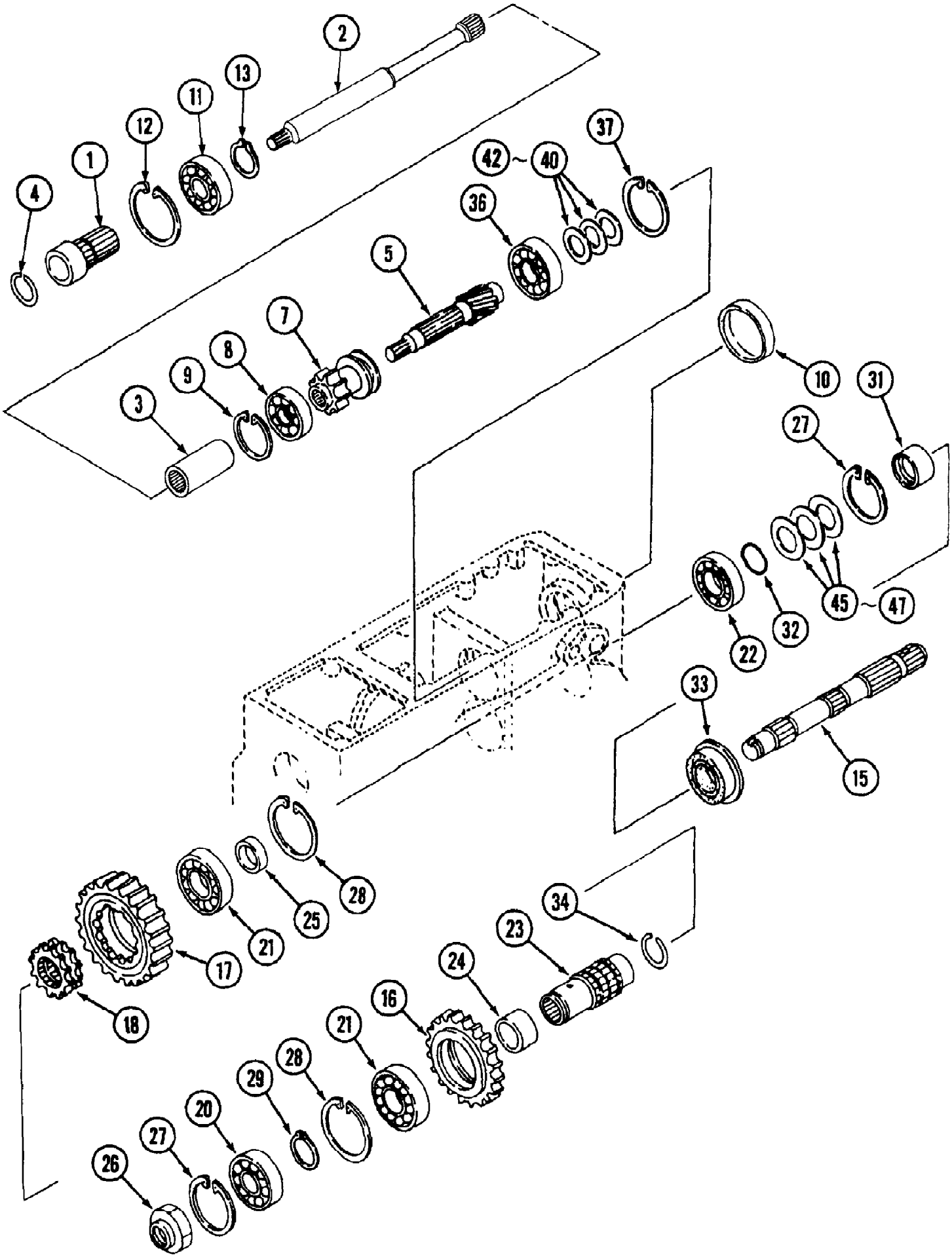

www.mymowerparts.com

For Discount Cub Cadet Parts Call 606-678-9623 or 606-561-4983

Ref #	Part Number	Qty	S/P/F	Description
1	MA-19631275000	1		Joint
2	MA-19641246000	1	F	Shaft
	MA-19681246000	1	F	Shaft
3	MA-10251922000	1	S/F	Collar
	MA-10231915000	1	S/F	Joint
4	MA-10311363001	1		Ring
5	MA-19681247000	1	F	Shaft, PTO
	MA-19681247001	1	F	Shaft, PTO
7	MA-19641248001	1	/P	Gear, 19T
8	MA-07520663050	1		Bearing
9	MA-07410006200	1		Ring
10	MA-08340072100	1		Seal, Cap
11	MA-07500060050	1		Bearing
12	MA-07410004701	1	/P	Ring
13	MA-07400002500	1	/P	Ring
15	MA-19641249000	1		Shaft, PTO Drive
16	MA-19641251000	1		Gear, 46T
17	MA-19681252000	1		Gear, 44T
18	MA-19631249000	1		Gear, Clutch
20	MA-07520663050	1		Bearing
21	MA-07500062070	2		Bearing
22	MA-07520662060	1		Bearing
23	MA-19641254000	1		Boss, Spline
24	MA-19631252000	1		Collar
25	MA-19641253000	1		Collar
26	MA-11741273000	1		Nut (M25)
27	MA-07410006200	2		Ring
28	MA-07410007201	2		Ring
29	MA-07400003500	1	S	Ring
31	MA-10251405000	1		Bushing
32	MA-08300100300	1		O-Ring
33	MA-10211314000	1		Seal, Oil
34	MA-19631253000	1		Ring
36	MA-07520663060	1		Bearing
37	MA-07410007201	1		Ring
	MA-19641281000	1		Liner Set Includes Items 40 - 42
40	MA-07300007202	AR		Liner t=0.2
41	MA-07300007204	AR		Liner t=0.4
42	MA-07300007208	AR		Liner t=0.8
	MA-10211318000	1		Liner Set Includes Items 45 - 47
45	MA-07300006201	AR		Liner t=0.15
46	MA-07300006204	AR		Liner t=0.4
47	MA-07300006208	AR		Liner t=0.8

www.mymowerparts.com

For Discount Cub Cadet Parts Call 606-678-9623 or 606-561-4983

FRONT WHEEL

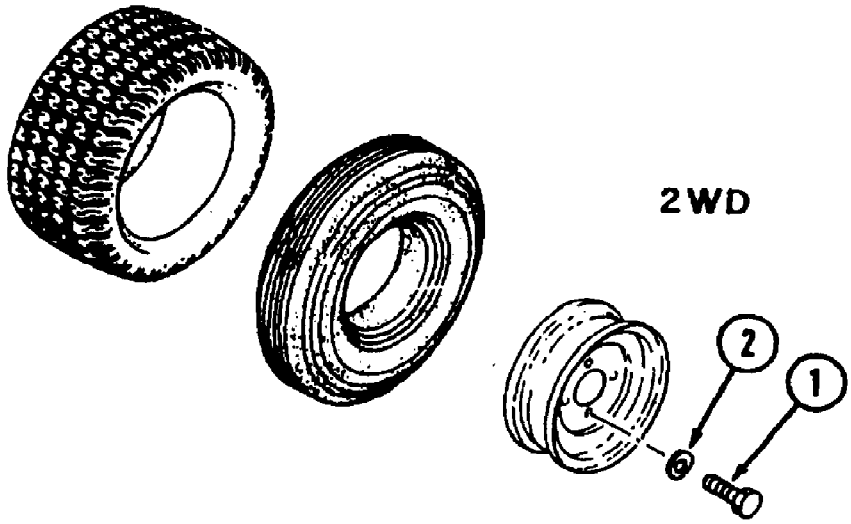

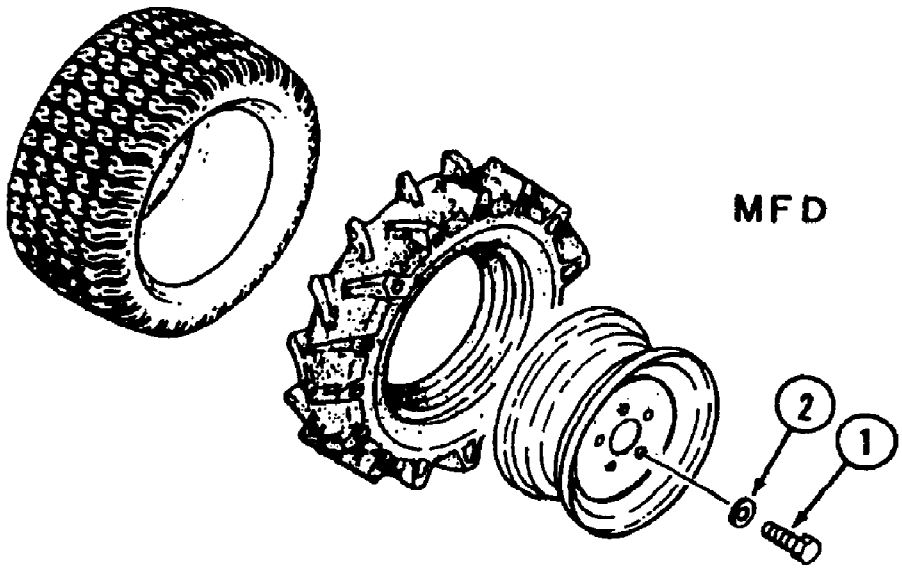

REAR WHEEL

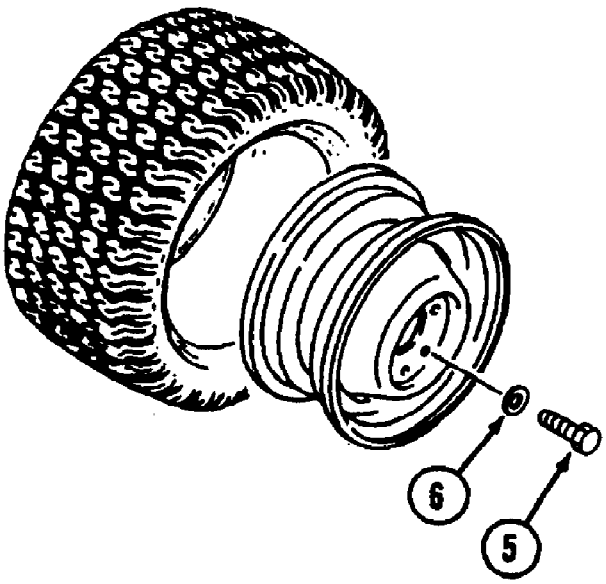

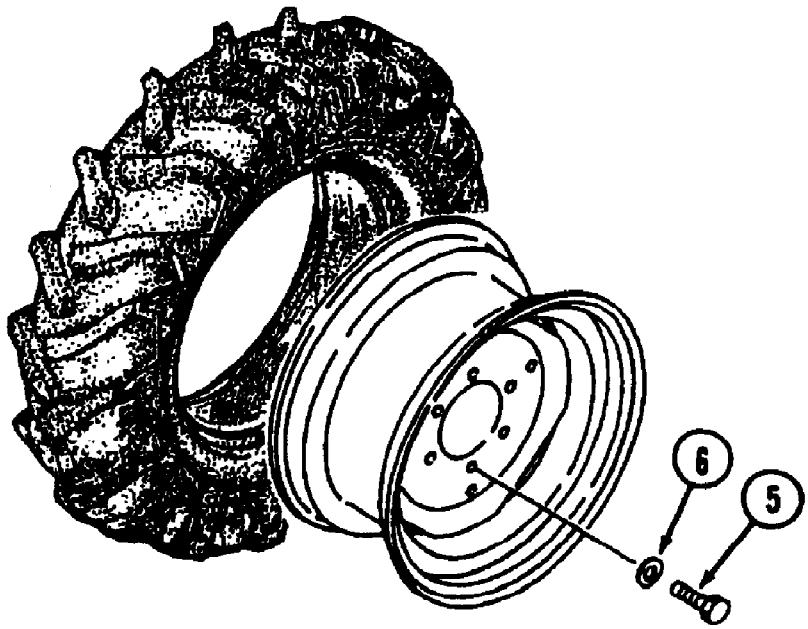

www.mymowerparts.com

For Discount Cub Cadet Parts Call 606-678-9623 or 606-561-4983

Ref #	Part Number	Qty	S/P/F	Description
1	MA-A0420314030	8	S	Bolt
2	MA-03550361428	8		Washer
5	MA-A0420314030	12	S	Bolt
6	MA-03550361428	12		Washer

www.mymowerparts.com

For Discount Cub Cadet Parts Call 606-678-9623 or 606-561-4983

FRONT WHEEL

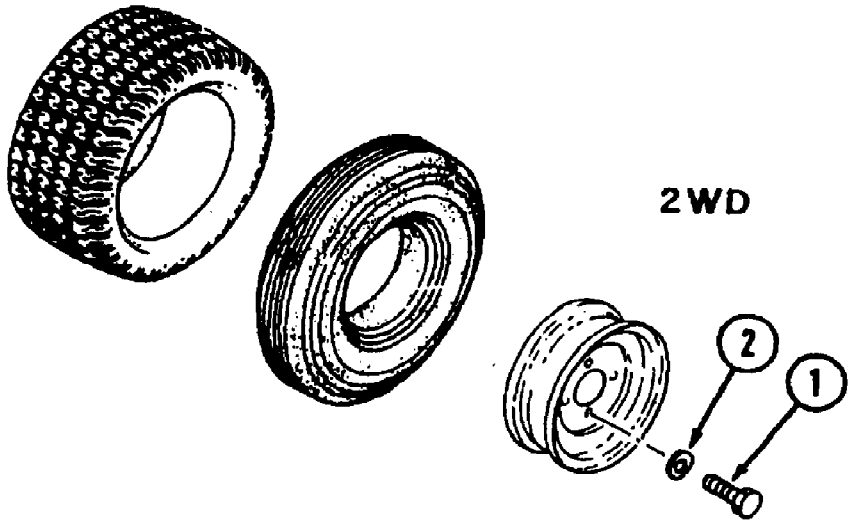

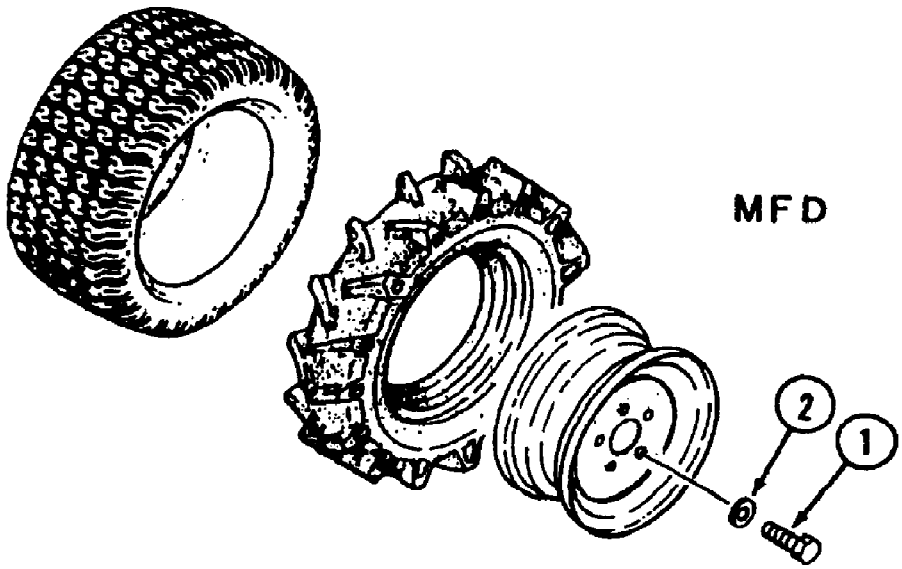

REAR WHEEL

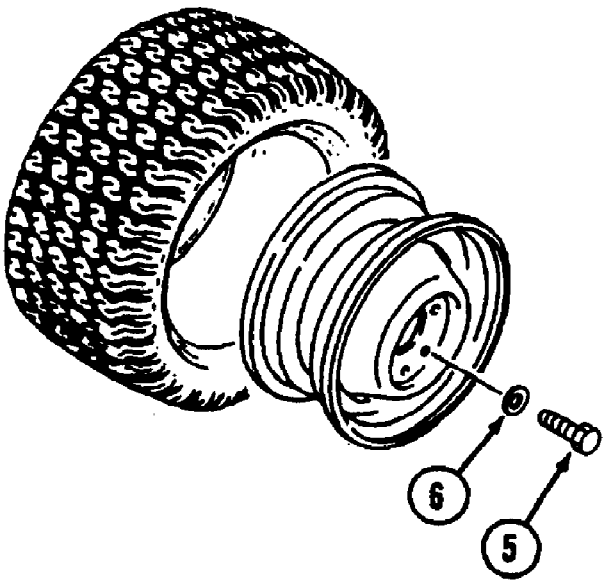

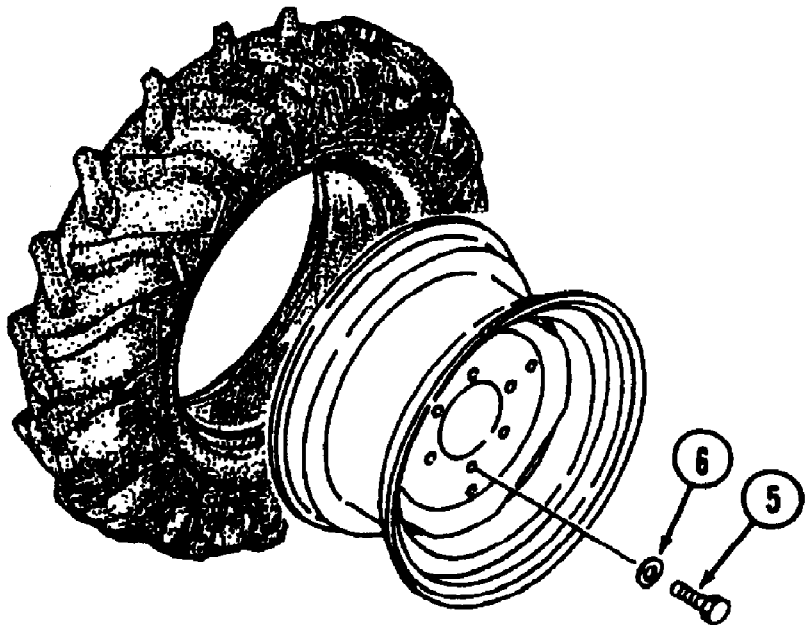

www.mymowerparts.com

For Discount Cub Cadet Parts Call 606-678-9623 or 606-561-4983

Ref #	Part Number	Qty	S/P/F	Description
1	MA-A0420314030	12	S	Bolt
2	MA-03550361428	12		Washer
5	MA-A0420314030	12	S	Bolt
6	MA-03550361428	12		Washer

www.mymowerparts.com

For Discount Cub Cadet Parts Call 606-678-9623 or 606-561-4983

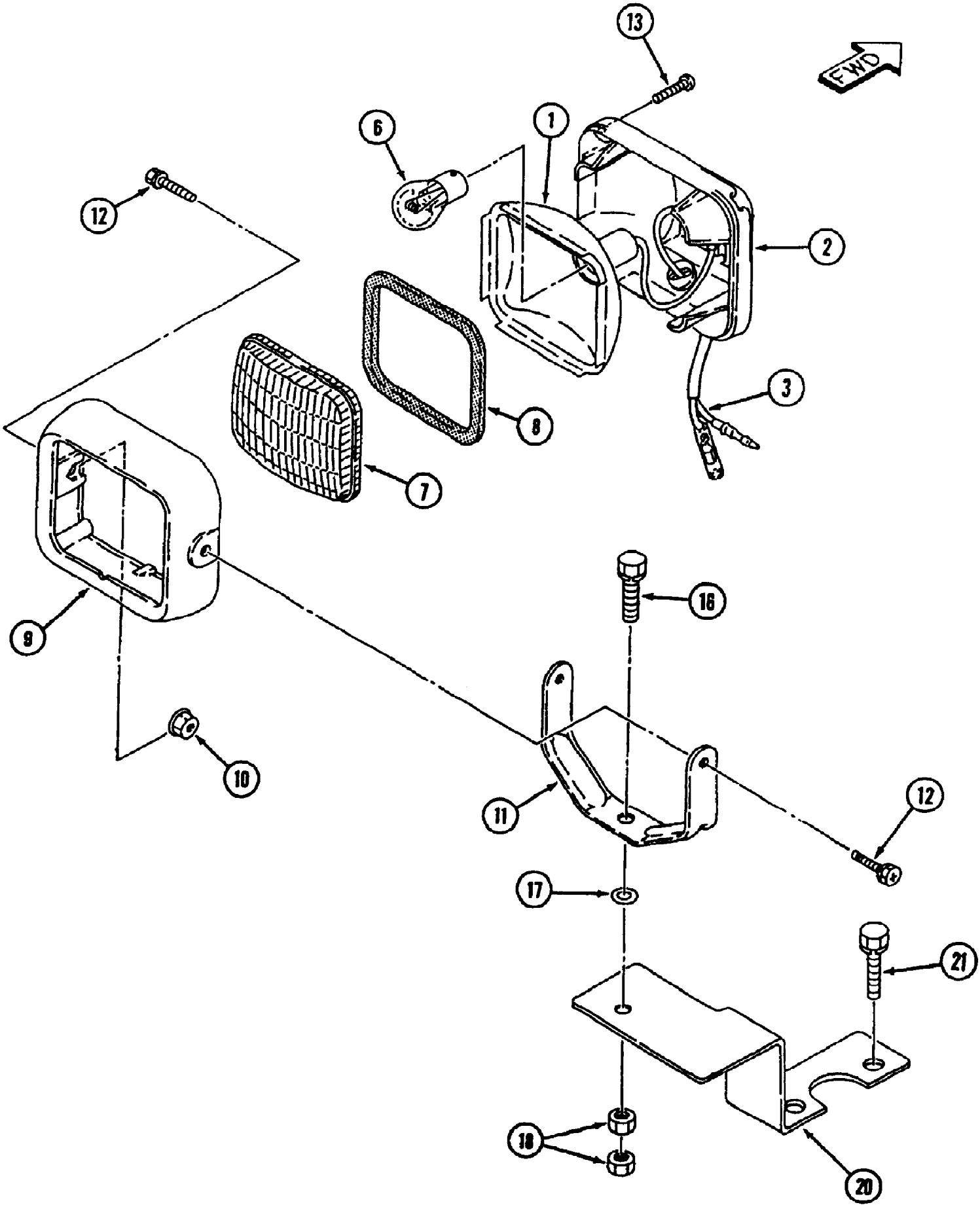

www.mymowerparts.com

For Discount Cub Cadet Parts Call 606-678-9623 or 606-561-4983

Ref #	Part Number	Qty	S/P/F	Description
	MA-12187742000	1	/P	Work Lamp Includes Items 1 - 13
	MA-12187743100	1	S	Body, Component Includes Items 1 - 3
1		1		Reflector, Component
2		1		Housing, Component
3		1		Lead, Component
6	MA-09808122304	1		Bulb
7	MA-12087711100	1		Lens
8	MA-12087711300	1		Gasket
9		1		Rim
10	MA-F3000106000	2		Nut
11	MA-12087711700	1		Stay
12	MA-F1040106016	2		Bolt
13	MA-04322104020	4		Screw, Tapping
16	MA-F1540108025	1		Bolt
17	MA-03500140818	1		Washer
18	MA-A3010108002	2		Nut
20	MA-12187745AG0	1		Bracket
21	MA-F1540108012	2		Bolt

www.mymowerparts.com