For Discount Cub Cadet Parts Call 606-678-9623 or 606-561-4983

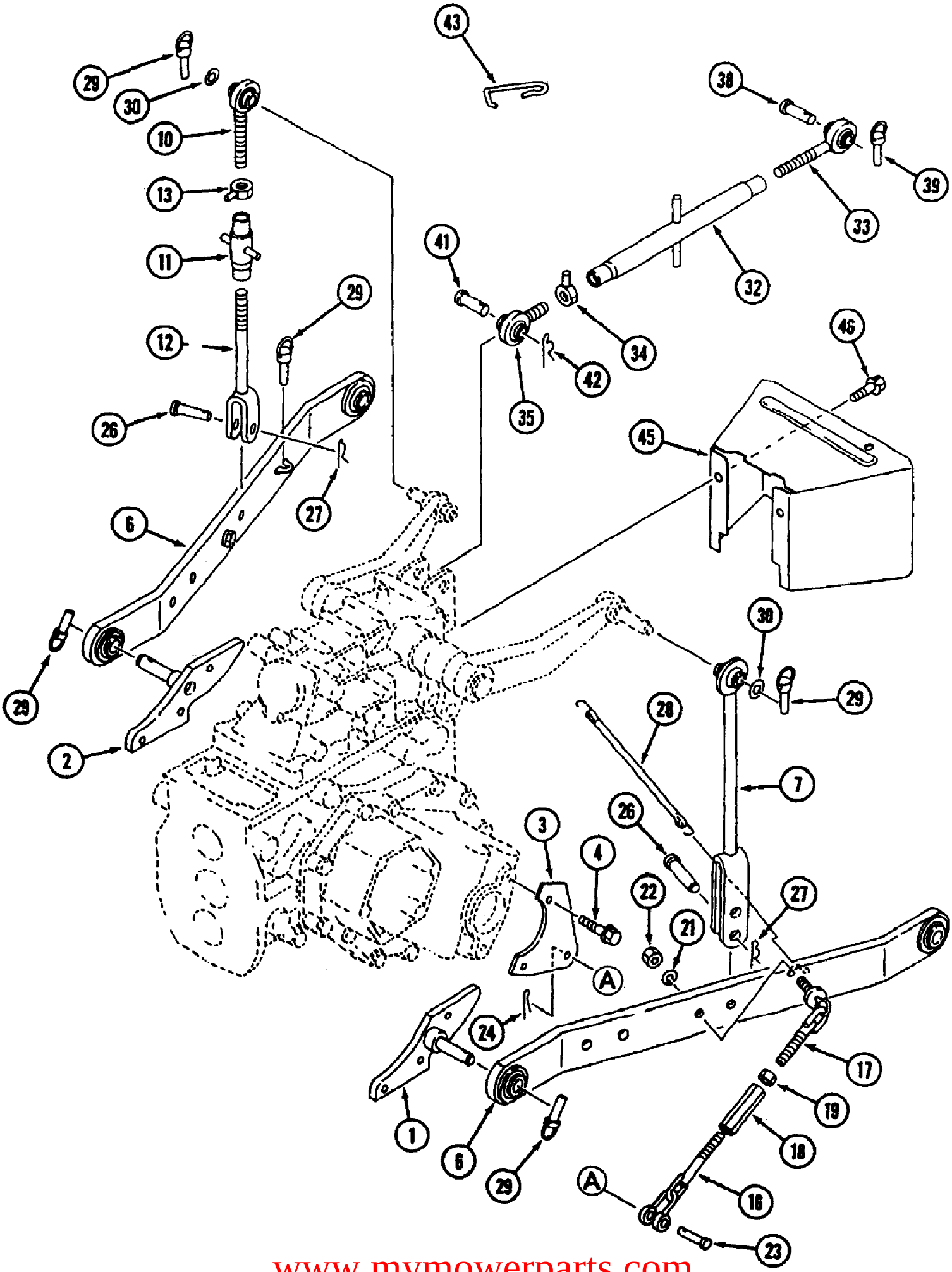

www.mymowerparts.com

For Discount Cub Cadet Parts Call 606-678-9623 or 606-561-4983

Ref #	Part Number	Qty	S/P/F	Description
1	MA-19633001AG0	1		Bracket, L.H.
2	MA-19633002AG0	1		Bracket, R.H.
3	MA-19633003AG0	2		Bracket
4	MA-F1540112030	4		Bolt
	MA-19633005AG0	1		3P Sub Ass'y. Includes 6-42
6	MA-19633006AG0	2		Link, Lower
7	MA-19633007AG0	1		Rod, Lift L.H.
	MA-19633011AG0	1		Rod, Lift R.H. Ass'y. Includes 10-13
10	MA-19633012AG0	1	/P	Rod A
11	MA-10323025AG0	1	/P	Lift Rod, Middle
12	MA-19633014AG0	1		Rod B
13	MA-10323024000	1	S	Nut, Lock
	MA-19633016000	2		Check Chain Ass'y. Includes 16-19
16	MA-19633017000	2	/P	Chain A
17	MA-19633018000	2		Chain B
18	MA-19633019AG0	2	/P	Turnbuckle
19	MA-A3000112002	2		Nut
21	MA-A3600101602	2		Washer
22	MA-A3040116002	2		Nut
23	MA-19633021000	2		Pin, Clevis
24	MA-05200130020	2		Pin, Split
26	MA-10323018001	2	/P	Pin, Lift Rod
27	MA-10323019000	2		Pin, Snap
28	MA-19633024000	1		Band
29	MA-10323012000	6		Linch Pin
30	MA-10323016000	2		Washer
	MA-19633026AG0	1	/P	Top Link Ass'y. Includes 32-35
32	MA-19633027AG0	1		Turnbuckle
33	MA-19633028AG0	1		Adjuster
34	MA-19633029000	1		Nut
35	MA-19633036AG0	1		Adjuster
38	MA-19633037000	1		Pin, Upper Link
39	MA-10323012000	1		Linch Pin
41	MA-19633038000	1		Pin
42	MA-19633041000	1		Pin, Snap
43	MA-19633031000	1		Hook, Top Link
45	MA-19633034AG0	1	S	Cover, PTO
46	MA-F1540112025	2		Bolt

www.mymowerparts.com

For Discount Cub Cadet Parts Call 606-678-9623 or 606-561-4983

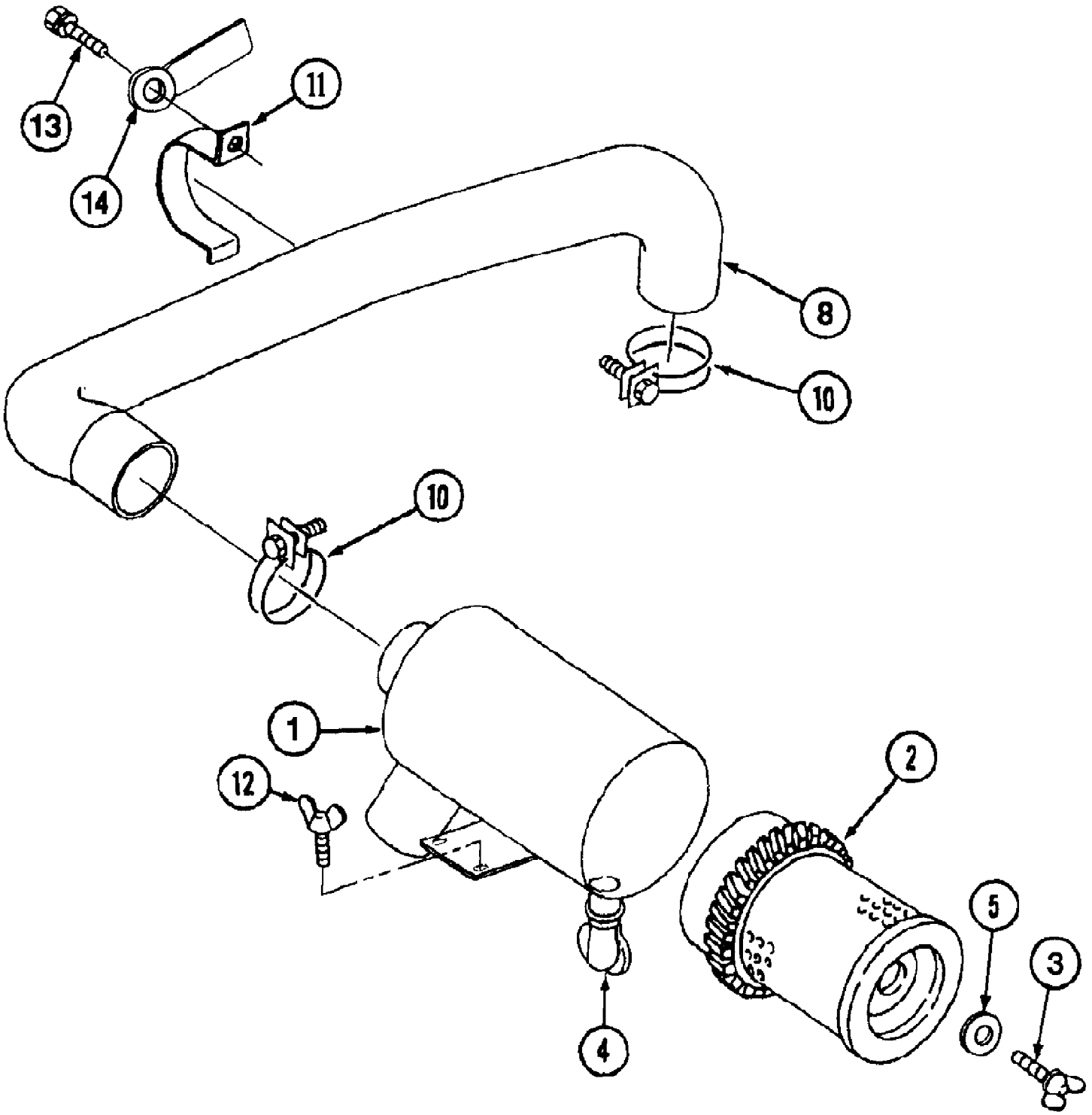

www.mymowerparts.com

For Discount Cub Cadet Parts Call 606-678-9623 or 606-561-4983

Ref #	Part Number	Qty	S/P/F	Description
	MA-19630511000	1		Air Cleaner Includes Items 1 - 5
1	MA-10320521100	1		Case Ass'y.
2	MA-10300511200	1		Element
3	MA-36610304000	1		Bolt Ass'y., Wing
4	MA-10300511300	1		Valve
5	MA-19820021110	1		Washer, Seal
8	MA-19630512001	1		Hose Air
10	MA-00501100560	2		Band, Hose
11	MA-19630513000	1		Clamp
12	MA-14141454000	1		Bolt, Wing
13	MA-F1540108020	1	F	Bolt
	MA-H1540108020	1	F	Bolt
14	MA-00502108083	1	F	Clamp

www.mymowerparts.com

For Discount Cub Cadet Parts Call 606-678-9623 or 606-561-4983

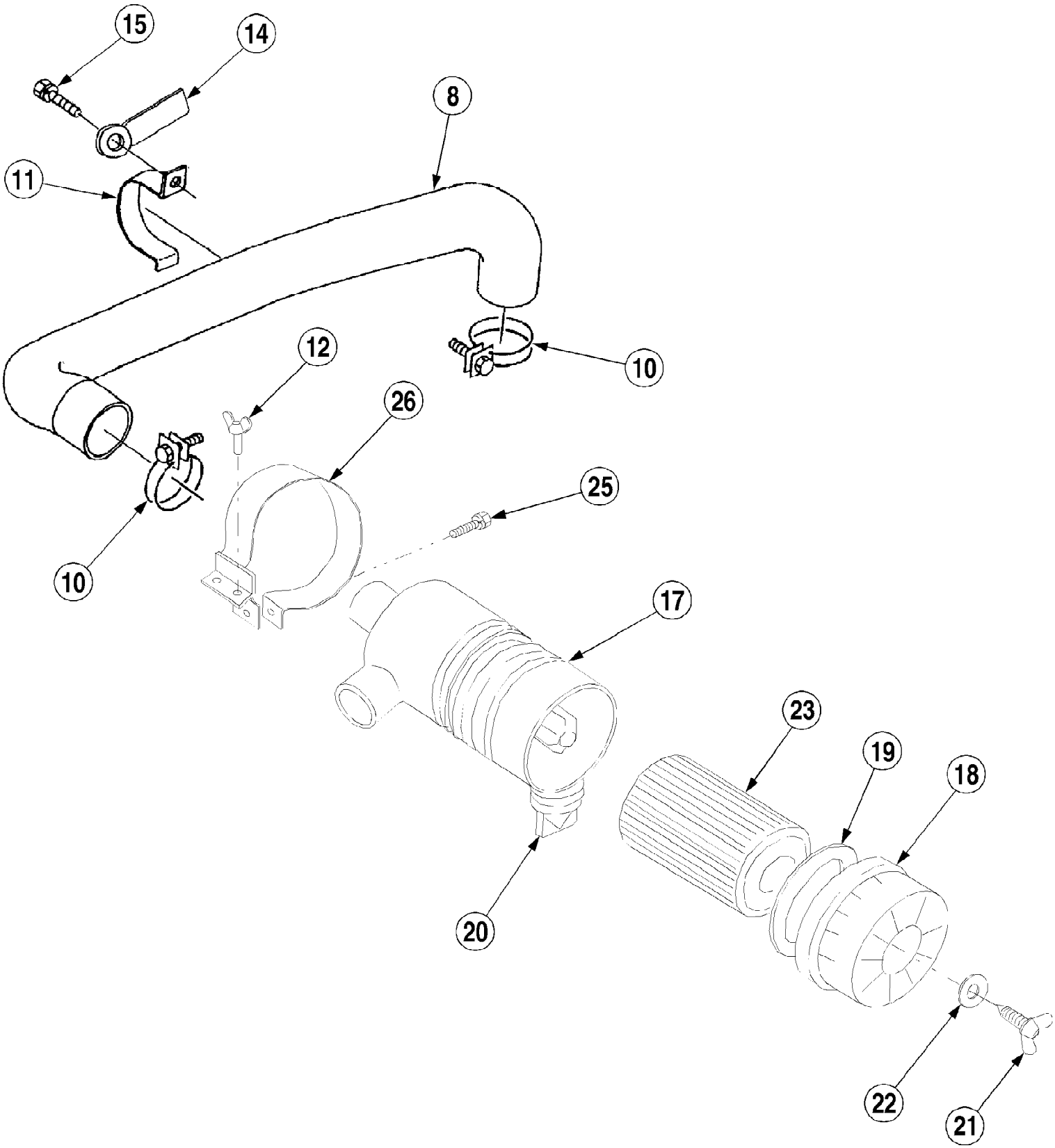

www.mymowerparts.com

For Discount Cub Cadet Parts Call 606-678-9623 or 606-561-4983

Ref #	Part Number	Qty	S/P/F	Description
	MA-19670511000	1		Air Cleaner Assembly (Includes item 17-23)
8	MA-19630512001	1		Hose, Air
10	MA-00501100560	2		Band, Hose
11	MA-19630513000	1		Clamp
12	MA-14141454000	1		Bolt, Wing
14	MA-00502108083	1		Clamp
15	MA-H1540108020	1		Bolt
17	N/A	1		Case
18	MA-35460501200	1		Cap
19	MA-35460501300	1		Gasket
20	MA-35460501400	1		Valve
21	MA-35460501500	1		Bolt Ass'y., Wing
22	MA-35460501600	1		Washer, Seal
23	MA-35460501800	1	F	Element
25	MA-F1540108030	1		Bolt
26	MA-19670512AG0	1		Band

www.mymowerparts.com

For Discount Cub Cadet Parts Call 606-678-9623 or 606-561-4983

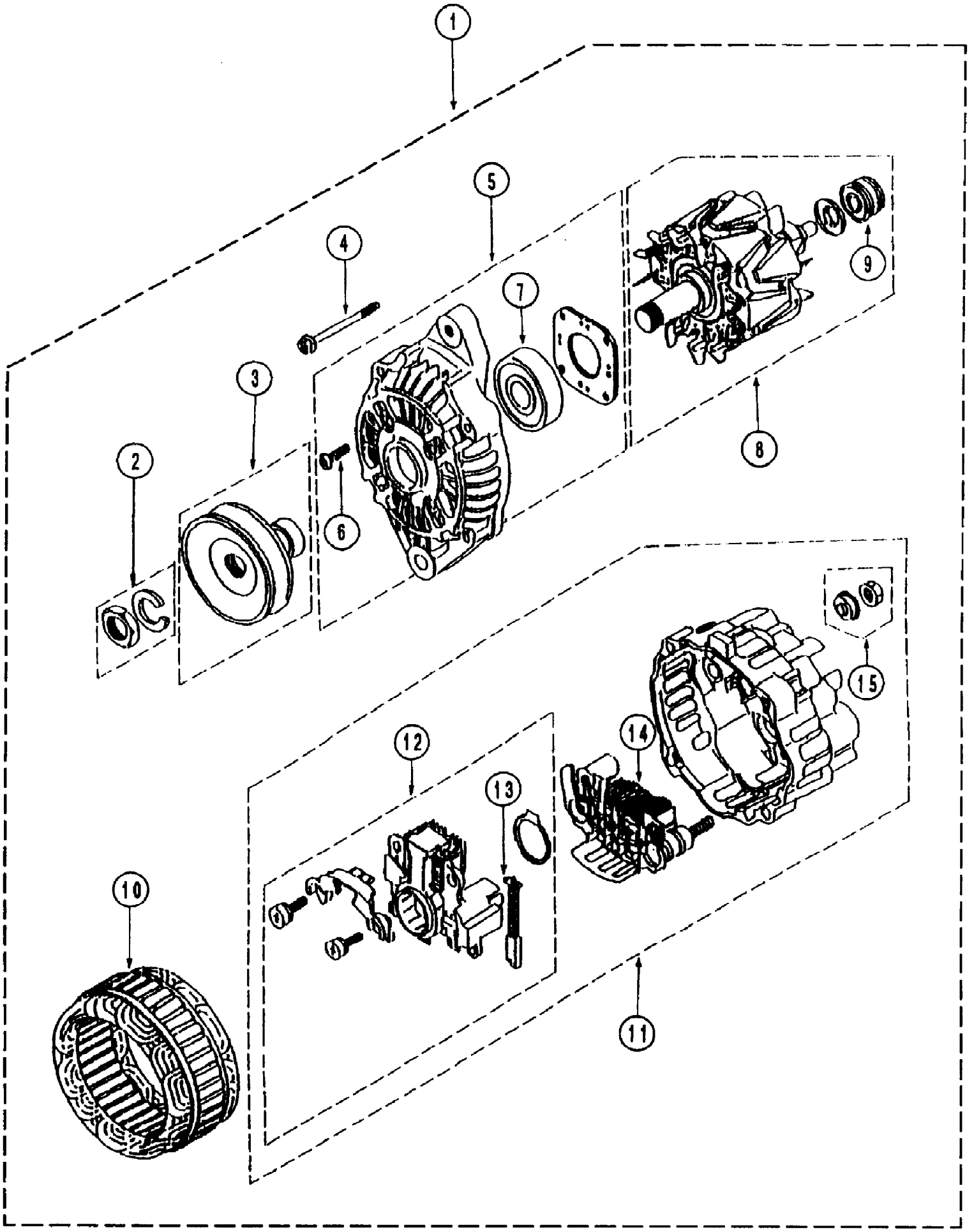

www.mymowerparts.com

For Discount Cub Cadet Parts Call 606-678-9623 or 606-561-4983

Ref #	Part Number	Qty	S/P/F	Description
1	MA-31A68-00401	1	S	Alternator Ass'y
2	MA-A981X20771	1		Nut Set
3	MA-A628T62170	1		Pulley Ass'y
4	MA-A414X19271	1		Bolt Set
5	MA-A640T52770	1		Bracket Ass'y, Front
6	MA-A414X21271	1		Screw Set
7	MA-S930P18870	1		Bearing, Front
8	MA-A880T65470	1		Rotor Ass'y
9	MA-S930P63670	1		Bearing, Rear
10	MA-A383T46370	1		Starter Ass'y
11	MA-A642X25570	1		Bracket Ass'y, Rear
12	MA-A866X28472	1		Regulator Set
13	MA-A647X50170	2	/P	Brush Set
14	MA-A860T40670	1		Rectifier Ass'y
15	MA-A529X07871	1		Nut Set

www.mymowerparts.com

For Discount Cub Cadet Parts Call 606-678-9623 or 606-561-4983

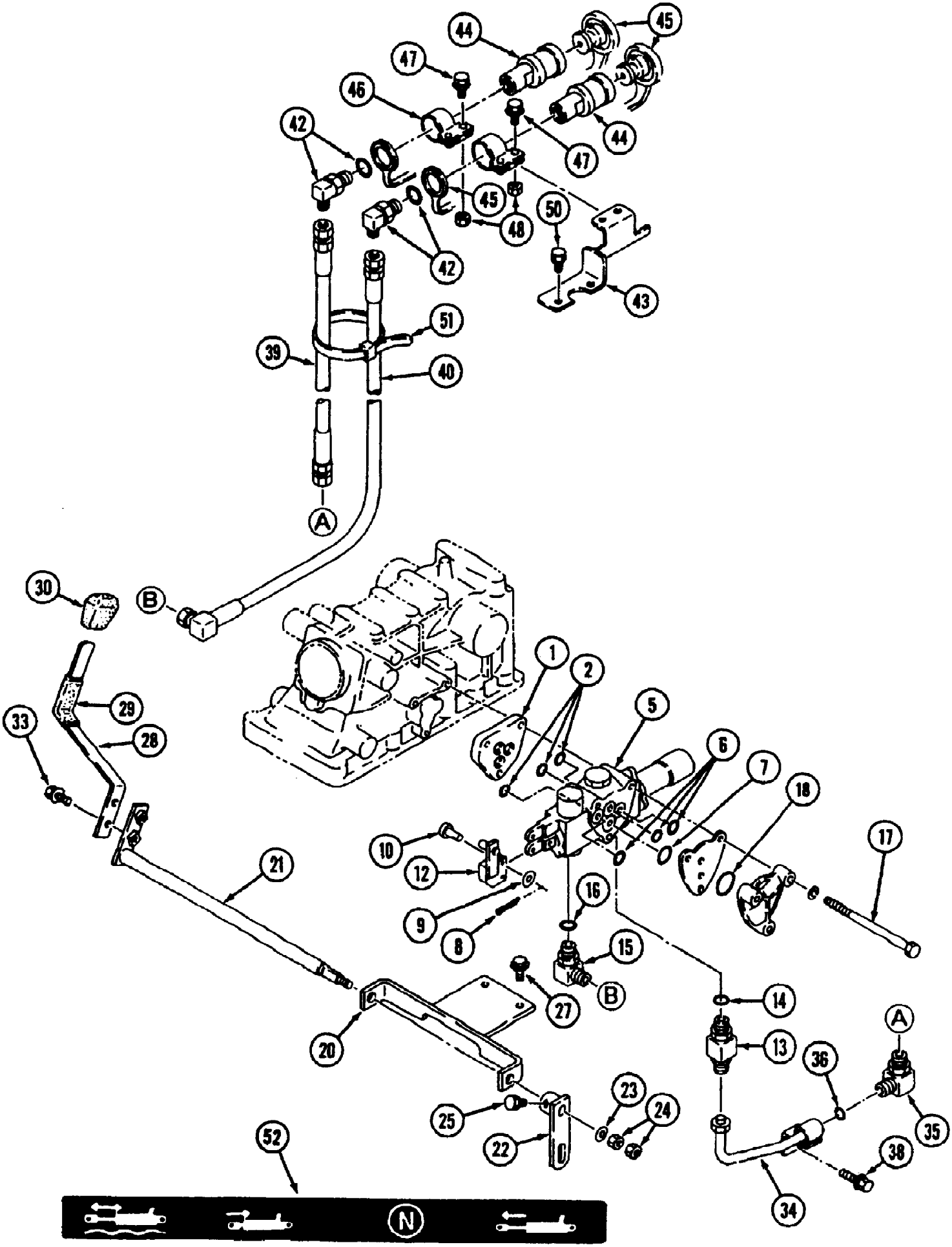

www.mymowerparts.com

For Discount Cub Cadet Parts Call 606-678-9623 or 606-561-4983

Ref #	Part Number	Qty	S/P/F	Description
1	MA-12185026000	1		Spacer
2	MA-08301100120	3	/P	O-Ring
	MA-19632482AG0	1		Sub Valve Includes 5-10
5		1		Body
6	MA-08300100120	3	S	O-Ring
7	MA-08300100160	1	/P	O-Ring
8	MA-05200112008	3		Pin, Split
9	MA-03500120512	3		Washer
10	MA-11556501270	3		Pin, Clevis
12	MA-19632483000	1		Arm
13	MA-06203112171	1		Body (Nipple)
14	MA-08301100140	1		O-Ring
15	MA-06313117170	1		Elbow 90 Includes 15,16
16	MA-08300100140	1		O-Ring
17	MA-A0540108095	3		Bolt
18	MA-A3600100802	3		Washer
20	MA-19632484AG0	1		Bracket
21	MA-19632486000	1		Shaft
22	MA-19632487000	1		Arm
23	MA-03500140818	1		Washer
24	MA-A3010108002	2		Nut
25	MA-A0500108012	1		Bolt
27	MA-F1550110025	2		Bolt
	MA-19632488AG0	1		Lever Ass'y. Includes 28,29
28		1		Lever
29	MA-19632439000	1		Tube
30	MA-11742449000	1		Grip
33	MA-H1540108016	2		Bolt
34	MA-19632490AG0	1		Pipe Press. Ass'y.
35	MA-06313117170	1		Elbow 90 Includes 35,36
36	MA-08300100140	1		O-Ring
38	MA-H1550110016	1		Bolt
39	MA-19632492000	1		Hose Ass'y.
40	MA-19632493000	1		Hose Ass'y.
42	MA-19632494000	2		Fitting
43	MA-19632496AG0	1		Bracket
44	727-3093	2	S	Coupling
45	731-3177	2		Plug/A
46	MA-12185264000	2		Clamp, Coupler
47	MA-H1540108020	4		Bolt
48	MA-F3010108001	4		Nut
50	MA-F1540108012	2		Bolt
51	MA-00511070070	1		Band, Wire
52	MA-19632753000	1		Label, Aux. Valve

www.mymowerparts.com

For Discount Cub Cadet Parts Call 606-678-9623 or 606-561-4983

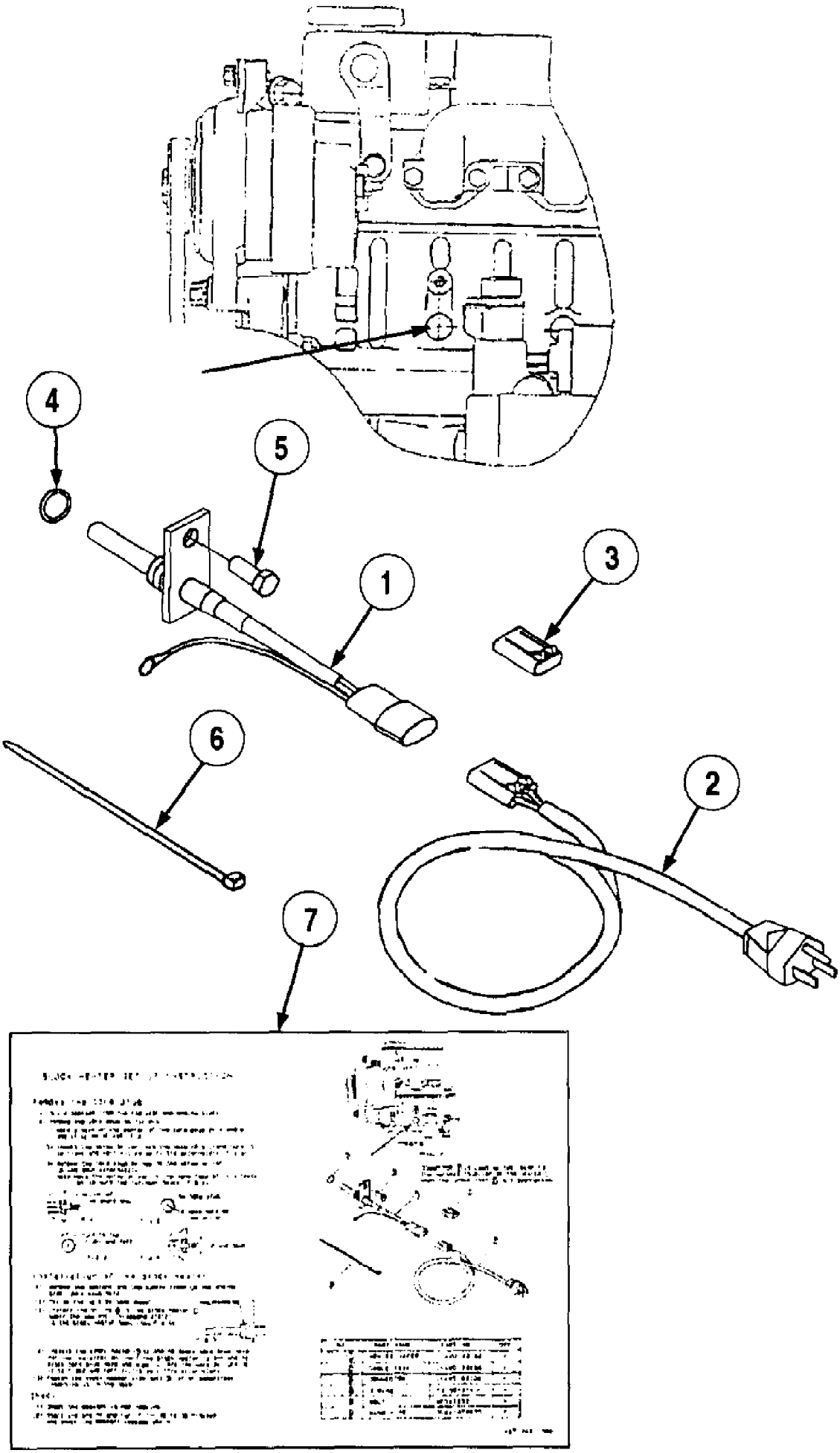

www.mymowerparts.com

For Discount Cub Cadet Parts Call 606-678-9623 or 606-561-4983

Block Heater (Optional)

Ref #	Part Number	Qty	S/P/F	Description
1		1		Heater, Water (NSS)
2	MA-31A90-03200	1		Cable Ass'y.
3	MA-31A90-03300	1		Connector
4	MA-F3150-01600	1	S	O-Ring
5	MA-MF241252	1		Bolt
6	MA-00511070070	1		Band Wire
7		1		Installation Chart (NSS)
	MA-19670050000	1		Block Heater Kit

www.mymowerparts.com

For Discount Cub Cadet Parts Call 606-678-9623 or 606-561-4983

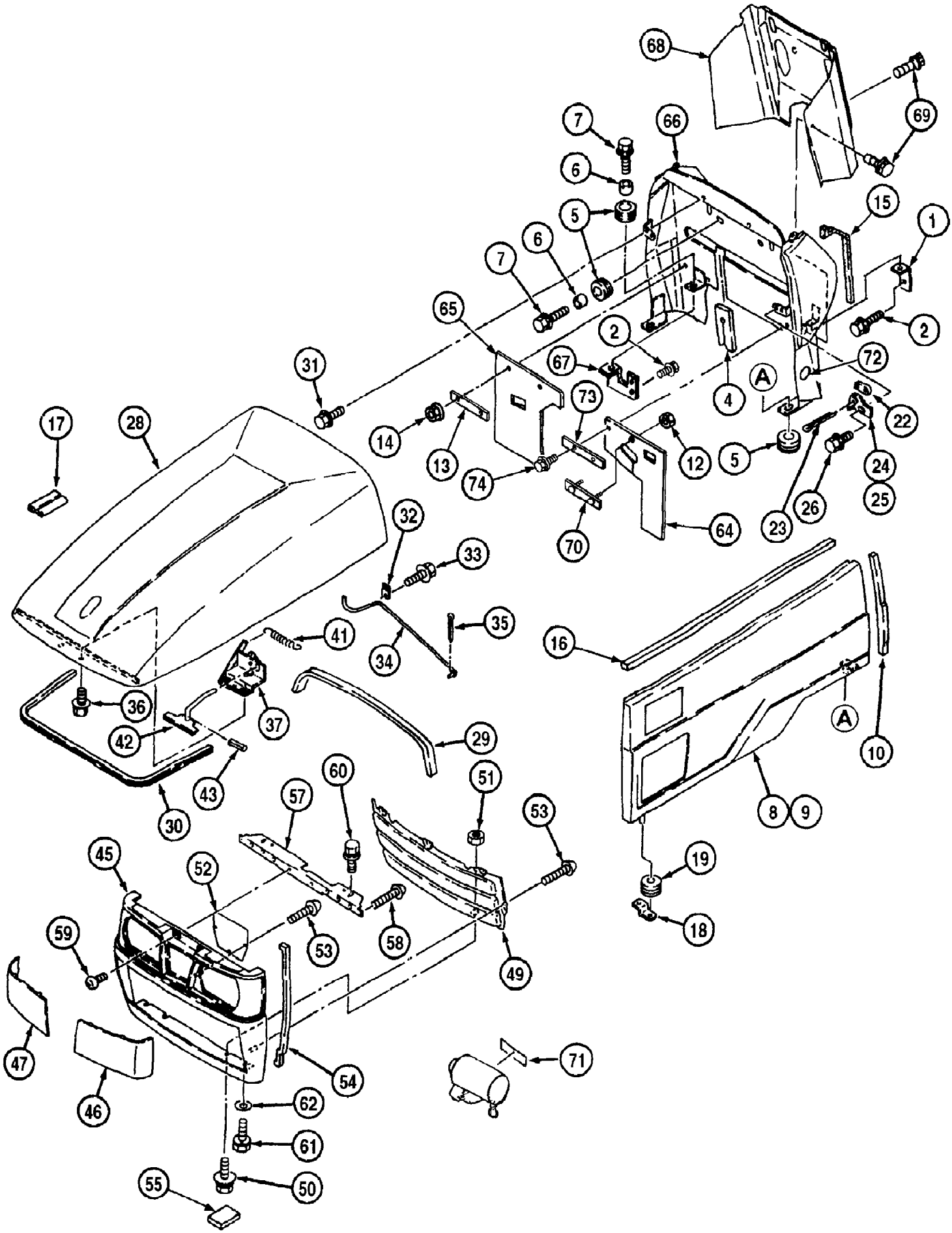

www.mymowerparts.com

For Discount Cub Cadet Parts Call 606-678-9623 or 606-561-4983

Ref #	Part Number	Qty	S/P/F	Description
1	MA-19632613000	1		Bracket
2	MA-H1540108020	3		Bolt
4	MA-19672615000	1		Cushion
5	MA-11930439000	6		Grommet
6	MA-67700-26000	4		Collar
7	MA-H1540108025	4		Bolt
8	MA-19672618BC0	1		Cover, Side L.H.
9	MA-19672619BC0	1		Cover, Side R.H.
10	MA-19632623000	2		Cushion
12	MA-F3000106000	2	F	Nut Used with Body Panel MA-19672612BC1.
13	MA-19632617000	1		Plate
14	MA-F3010108001	2		Nut
15	MA-10192598300	2	S	Cushion
16	MA-MA911822000	2	S	Rubber, Cushion
17	MA-19632017000	1		Cushion
18	MA-19632621AG0	2		Bracket
19	MA-11740217001	2		Grommet
22	MA-10322629001	4	/P	Hook
23	MA-05200130032	4		Pin, Split
24	MA-10322631000	2		Bracket A
25	MA-10322632000	2		Bracket B
26	MA-H1540108016	4		Bolt
28	MA-19672633BC1	1		Hood, Bonnet
29	MA-10382631000	1		Cushion
30	MA-19632634000	1		Cushion
31	MA-H1840108020	2		Bolt
32	MA-11910414000	1		Clip
33	MA-H1440106016	1	/P	Bolt
34	MA-19632642000	1		Rod, Stopper
35	MA-05200125016	1	S	Pin, Split
36	MA-H1540108016	2		Bolt
37	MA-19632636000	1		Bracket, Lever
41	MA-19740722000	1		Spring
42	MA-19632637BC0	1		Lever
43	MA-05500003032	1		Pin, Spring
45	MA-19672645000	1		Grille
46	MA-19632655000	1		Cover, Lamp L.H.
47	MA-19632656000	1		Cover, Lamp R.H.
49	MA-19672646AG0	1	/P	Screen
50	MA-H1440106016	2	/P	Bolt
51	MA-A3000106002	2		Nut
52	MA-19672647AG0	1	/P	Screen
53	MA-04322105010	8		Screw
54	MA-35187645500	2		Seal
55	MA-43630642000	2		Rubber
57	MA-19632651BC0	1	S	Support, Grille
58	MA-10212626000	2		Screw, Tapping
59	MA-A2520706012	2		Screw
60	MA-H1440106016	2	/P	Bolt
61	MA-F1440106016	2		Bolt
62	MA-03500150622	2		Washer
64	MA-19672611000	1		Cover
65	MA-19672611102	1		Cover

www.mymowerparts.com

For Discount Cub Cadet Parts Call 606-678-9623 or 606-561-4983

Ref #	Part Number	Qty	S/P/F	Description
66	MA-19672612BC0	1	F	Body, Panel
	MA-19672612BC1	1	F	Body, Panel
67	MA-19672613000	1		Bracket
68	MA-19672614000	1		Cover, Panel Rear
69	MA-H1640406016	3		Bolt
70	MA-19672616001	1	F	Plate Used with Body Panel MA-19672612BC1.
71	MA-37364709500	1		Plate
72	MA-19672621000	2		Mark
73	MA-19672616000	1	F	Plate Used with Body Panel MA-19672612BC0.
74	MA-H1440106012	2	F	Bolt Used with Body Panel MA-19672612BC0.

www.mymowerparts.com

For Discount Cub Cadet Parts Call 606-678-9623 or 606-561-4983

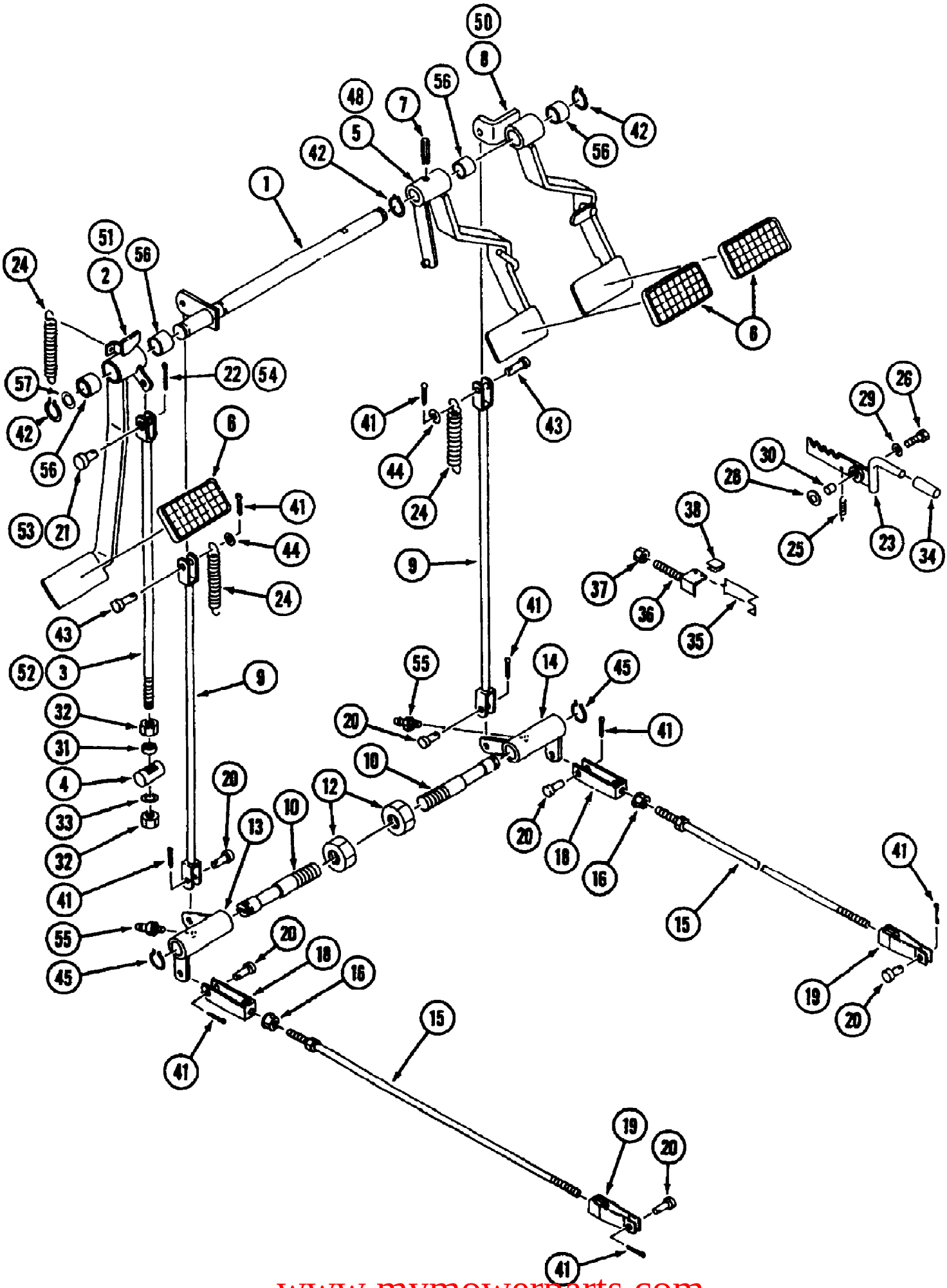

www.mymowerparts.com

For Discount Cub Cadet Parts Call 606-678-9623 or 606-561-4983

Ref #	Part Number	Qty	S/P/F	Description
1	MA-19631805AG0	1		Shaft, Brake
2		1		Pedal, Clutch (HST) Not used on this product
3		1		Rod, Clutch (HST) Not used on this product
4	MA-19631811000	1		Pin
5	MA-19631815AG1	1		Pedal, Brake L.H. (Gear)
6	MA-11931812000	3		Cover, Pedal
7	MA-19631816000	1		Pin, Spring
8	MA-19631817AG0	1		Pedal, Brake R.H. (Gear)
9	MA-19631819000	2		Rod, Brake A
10	MA-19631821000	2		Shaft, Link
12	MA-A0730124001	2		Nut
13	MA-19631823AG0	1		Link, Brake L.H.
14	MA-19631825AG0	1		Link, Brake R.H.
15	MA-19631826000	2		Rod, Brake B
16	MA-A3030110002	2		Nut
18	MA-10072222000	2		Joint
19	MA-10251711000	2		Joint
20	MA-05620108025	6		Pin, Clevis
21		1		Pin, Clevis (HST) Not used on this product
22		1		Pin, Split (HST) Not used on this product
23	MA-19631839AG1	1		Lever, Parking Spring
24	MA-27141917000	3		Spring
25	MA-11352230000	1		Spring
26	MA-F1540108025	1		Bolt
28	MA-07310101204	AR		Liner t=0.4
29	MA-03500160826	1		Washer
30	MA-67700-26000	1		Collar
31	MA-35155086100	1		Collar
32	MA-A3030112002	2		Nut
33	MA-A3600101202	1		Washer
34	MA-14212284000	1		Grip
35	MA-19631843001	1		Hook, Clutch Pedal
36	MA-19641842001	1		Bolt, Stopper
37	MA-A3030110002	1		Nut
38	MA-35011788000	1		Rubber, Edge
41	MA-05200125020	8		Pin, Split
42	MA-07400002500	3	/P	Ring
43	MA-05620108030	2		Pin, Clevis
44	MA-03500130815	2		Washer
45	MA-07400102200	2		Ring
48		1		Pedal, Brake L.H. (HST) Not used on this product
50		1		Pedal, Brake R.H. (HST) Not used on this product
51	MA-19631845AG0	1		Pedal, Clutch (Gear)
52	MA-19631846000	1		Rod, Clutch (Gear)
53	MA-05621114035	1		Pin, Clevis (Gear)
54	MA-05200140025	1		Pin, Split (Gear)
55	MA-A6513100300	2	S	Grease, Nipple
56	MA-07961025200	4		Bushing
57	MA-07310102510	AR	/P	Liner

www.mymowerparts.com

For Discount Cub Cadet Parts Call 606-678-9623 or 606-561-4983

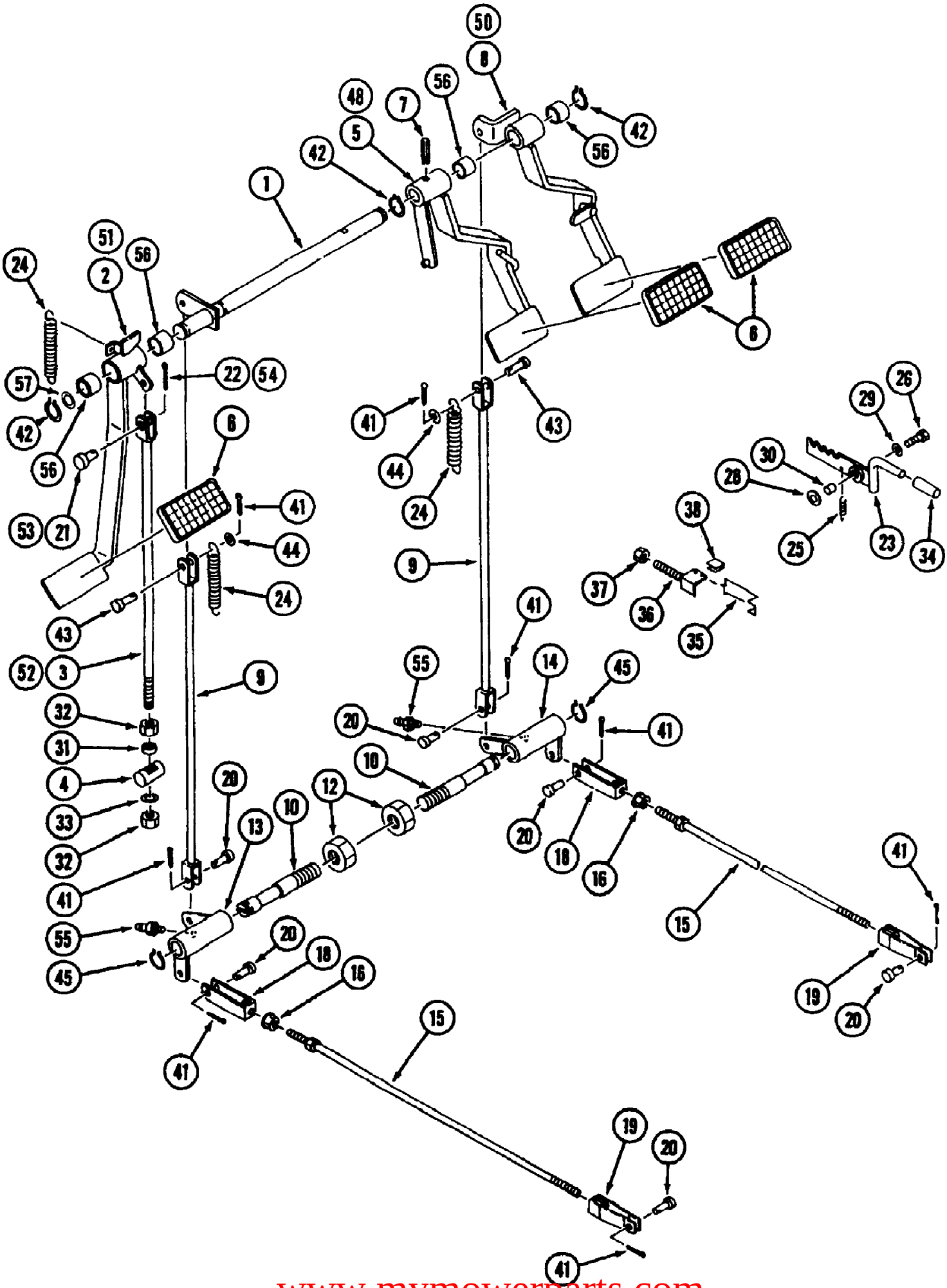

www.mymowerparts.com

For Discount Cub Cadet Parts Call 606-678-9623 or 606-561-4983

Ref #	Part Number	Qty	S/P/F	Description
1	MA-19631805AG0	1		Shaft, Brake
2	MA-19631807AG1	1		Pedal, Clutch (HST)
3	MA-19631809000	1		Rod, Clutch (HST)
4	MA-19631811000	1		Pin
5		1		Pedal, Brake L.H. (Gear) Not used on this product
6	MA-11931812000	3		Cover, Pedal
7	MA-19631816000	1		Pin, Spring
8		1		Pedal, Brake R.H. (Gear) Not used on this product
9	MA-19631819000	2		Rod, Brake A
10	MA-19631821000	2		Shaft, Link
12	MA-A0730124001	2		Nut
13	MA-19631823AG0	1		Link, Brake L.H.
14	MA-19631825AG0	1		Link, Brake R.H.
15	MA-19631826000	2		Rod, Brake B
16	MA-A3030110002	2		Nut
18	MA-10072222000	2		Joint
19	MA-10251711000	2		Joint
20	MA-05620108025	6		Pin, Clevis
21	MA-05620110030	1		Pin, Clevis (HST)
22	MA-05200130020	1		Pin, Split (HST)
23	MA-19631839AG1	1		Lever, Parking Spring
24	MA-27141917000	3		Spring
25	MA-11352230000	1		Spring
26	MA-F1540108025	1		Bolt
28	MA-07310101204	AR		Liner t=0.4
29	MA-03500160826	1		Washer
30	MA-67700-26000	1		Collar
31	MA-35155086100	1		Collar
32	MA-A3030112002	2		Nut
33	MA-A3600101202	1		Washer
34	MA-14212284000	1		Grip
35	MA-19631843001	1		Hook, Clutch Pedal
36	MA-19641842001	1		Bolt, Stopper
37	MA-A3030110002	1		Nut
38	MA-35011788000	1		Rubber, Edge
41	MA-05200125020	8		Pin, Split
42	MA-07400002500	3	/P	Ring
43	MA-05620108030	2		Pin, Clevis
44	MA-03500130815	2		Washer
45	MA-07400102200	2		Ring
48	MA-19631848AG1	1		Pedal, Brake L.H. (HST)
50	MA-19631849AG0	1	/P	Pedal, Brake R.H. (HST)
51		1		Pedal, Clutch (Gear) Not used on this product
52		1		Rod, Clutch (Gear) Not used on this product
53		1		Pin, Clevis (Gear) Not used on this product
54		1		Pin, Split (Gear) Not used on this product
55	MA-A6513100300	2	S	Grease, Nipple
56	MA-07961025200	4		Bushing
57	MA-07310102510	AR	/P	Liner

www.mymowerparts.com

For Discount Cub Cadet Parts Call 606-678-9623 or 606-561-4983

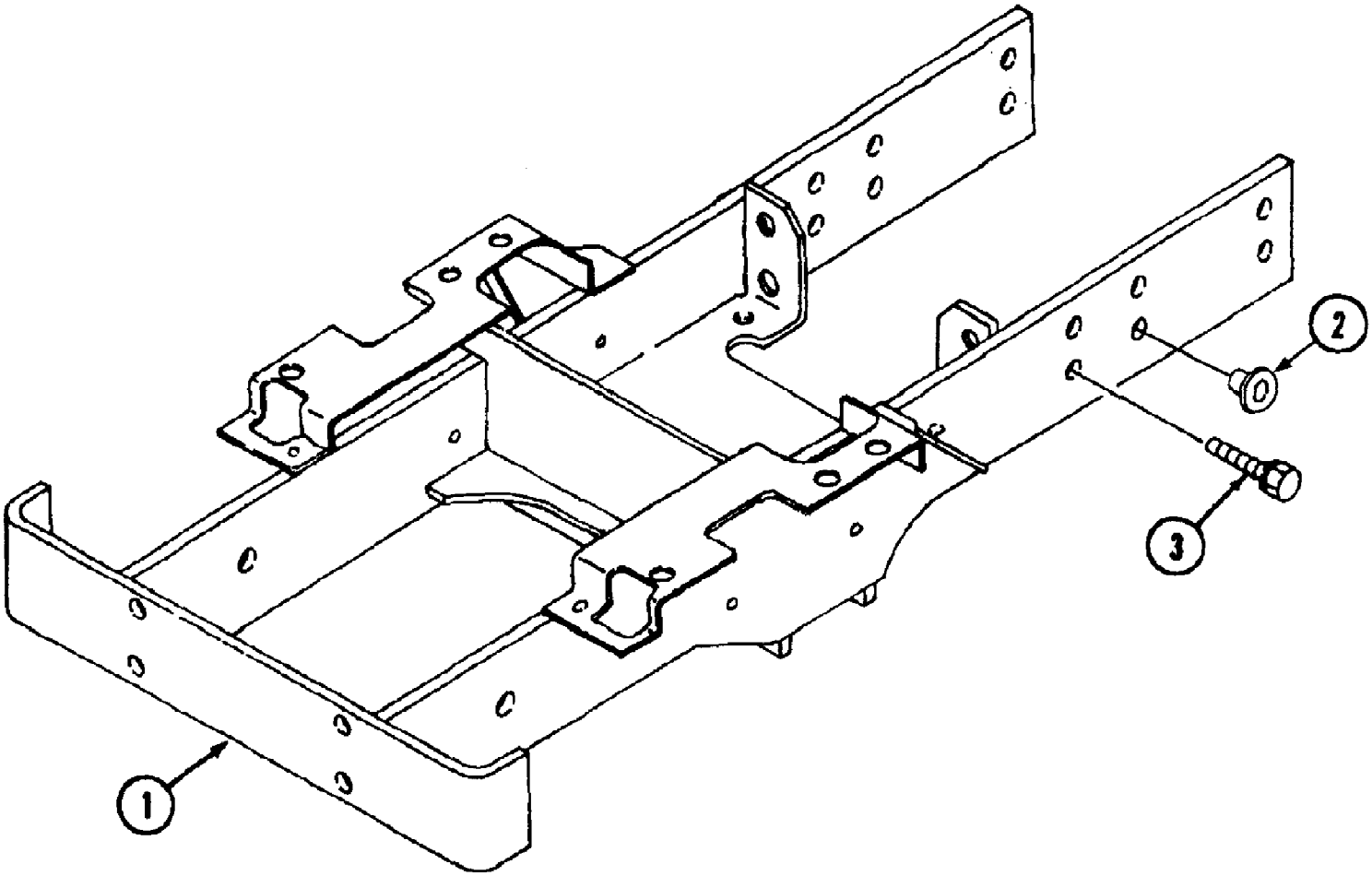

www.mymowerparts.com

For Discount Cub Cadet Parts Call 606-678-9623 or 606-561-4983

Ref #	Part Number	Qty	S/P/F	Description
1	MA-19672005AG2	1	F	Bracket, Front
	MA-19672005AG3	1	F	Bracket, Front
2	MA-19672007000	4	F	Plug Used with MA-19672005AG3 Front Bracket.
3	MA-F9450112035	8		Bolt

www.mymowerparts.com

For Discount Cub Cadet Parts Call 606-678-9623 or 606-561-4983

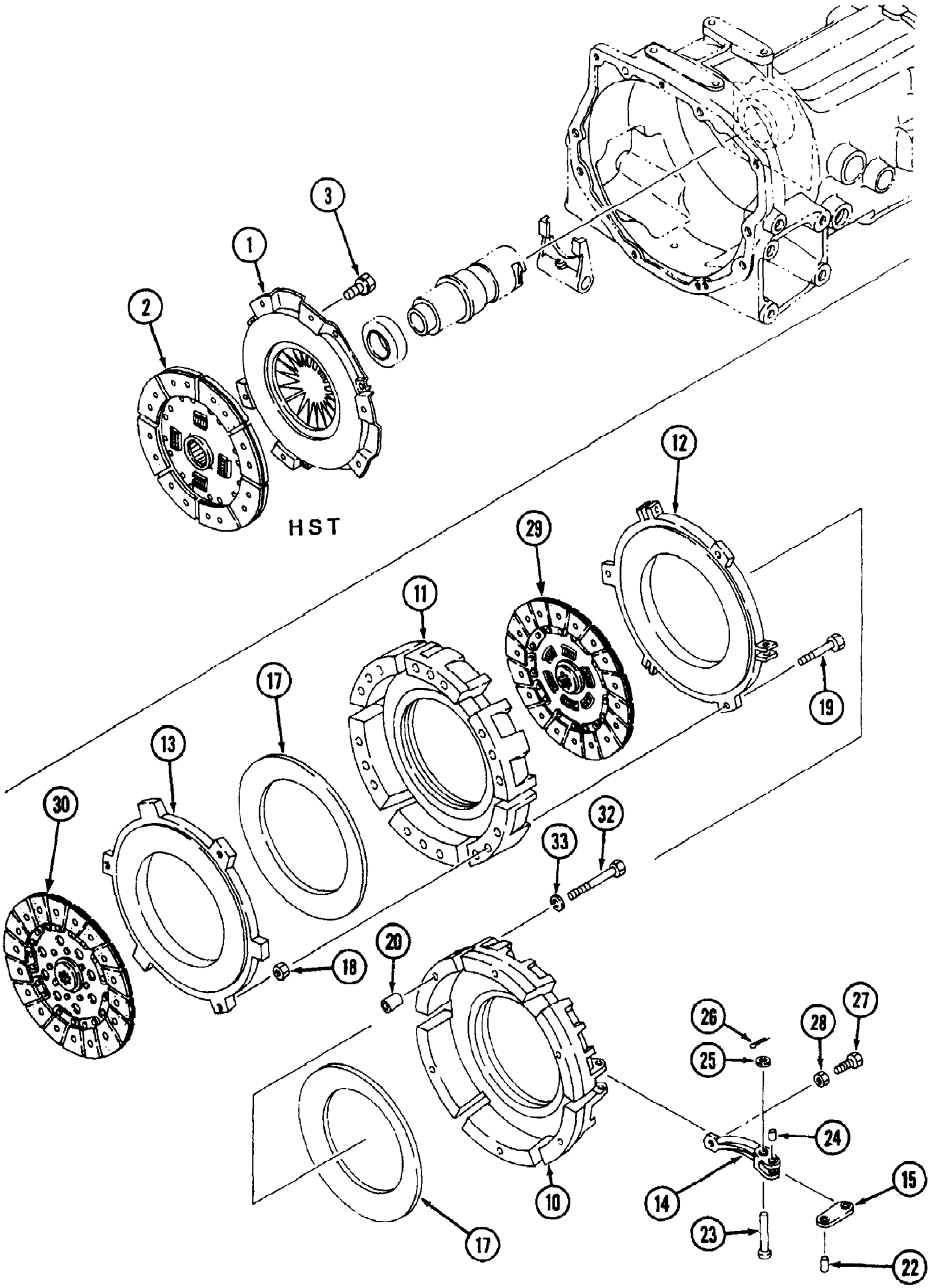

www.mymowerparts.com

For Discount Cub Cadet Parts Call 606-678-9623 or 606-561-4983

Ref #	Part Number	Qty	S/P/F	Description
1		1		Cover Ass'y. (HST) Not used on this product
2		1		Disk Ass'y. (HST) Not used on this product
3		1		Bolt (HST) Not used on this product
	MA-19631114000	1		Clutch Ass'y. (Gear) Includes 10-30
10	MA-19631114110	1		Clutch Cover (Gear)
11	MA-19631114120	1		Clutch Cover (Gear)
12	MA-19631114130	1		Pressure Plate (Gear)
13	MA-19631114140	1		Pressure Plate (Gear)
14	MA-19631114150	3		Release Lever Sub Ass'y. (Gear)
15	MA-19631114160	3		Release Rod Sub Ass'y. (Gear)
17	MA-19631114170	2		Diaphragm Spring (Gear)
18	MA-19631114180	3		Nut (Gear)
19	MA-19631114190	3		Bolt (Gear)
20	MA-19631114210	3		Knock Pin (Gear)
22	MA-19631114220	3		Pin (Gear)
23	MA-19631114230	3		Pin (Gear)
24	MA-19631114240	3		Pin (Gear)
25	MA-03500130815	3		Washer (Gear)
26	MA-05200125015	3	/P	Pin, Split (Gear)
27	MA-19631114270	3		Adjust Bolt (Gear)
28	MA-19631114280	3		Nut (Gear)
29	MA-19631116000	1		Clutch Disc Ass'y. (Gear)
30	MA-19631115000	1		Clutch Disc Ass'y. (Gear)
32	MA-A0540108100	6		Bolt (Gear)
33	MA-A3600100802	6		Washer (Gear)

www.mymowerparts.com

For Discount Cub Cadet Parts Call 606-678-9623 or 606-561-4983

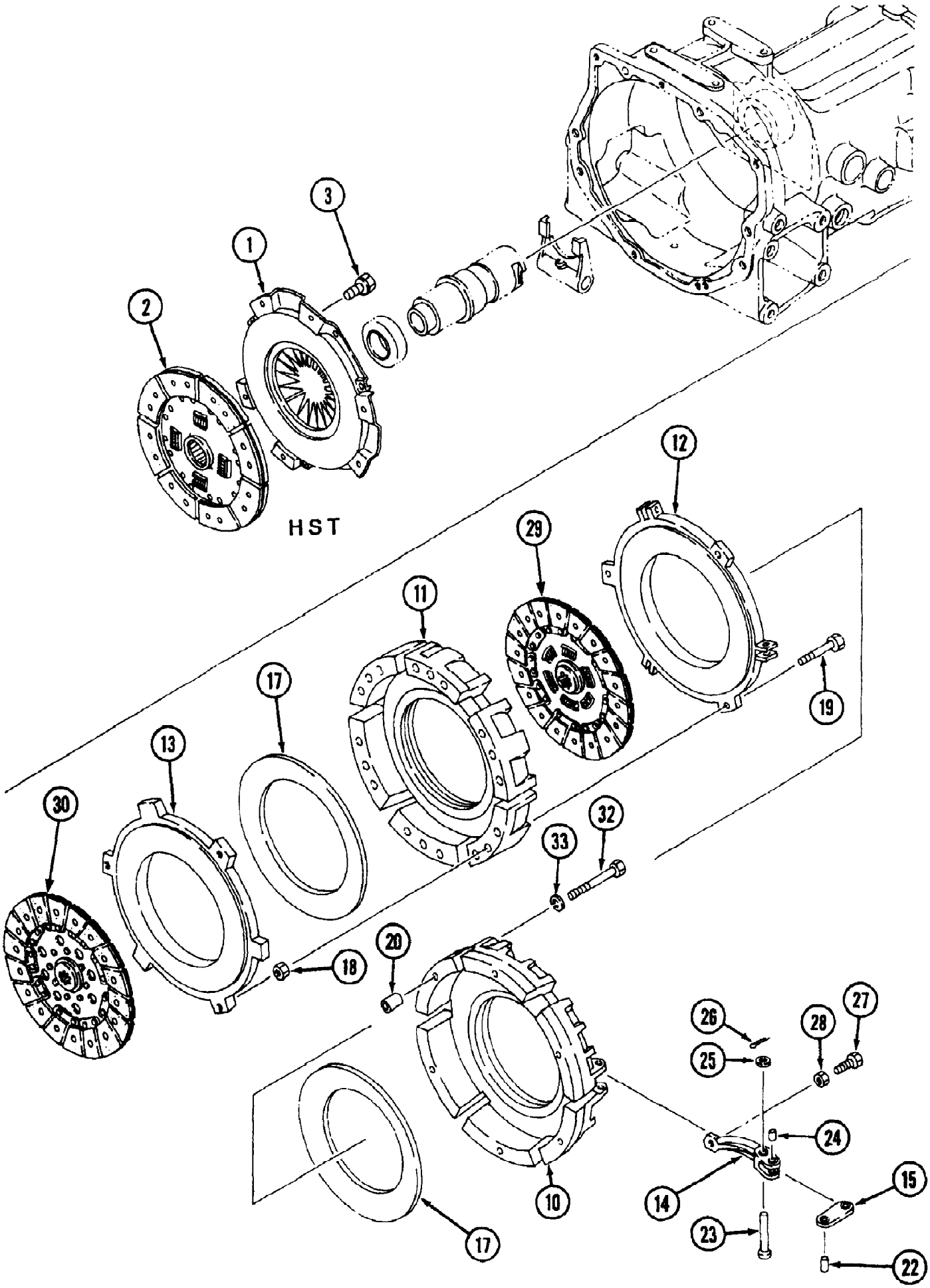

www.mymowerparts.com

For Discount Cub Cadet Parts Call 606-678-9623 or 606-561-4983

Ref #	Part Number	Qty	S/P/F	Description
1	MA-10211110000	1		Cover Ass'y. (HST)
2	MA-19631112000	1		Disk Ass'y. (HST)
3	MA-F1540108020	6		Bolt (HST)
		1		Clutch Ass'y. (Gear) Includes 10-30; Not used on this product
10		1		Clutch Cover (Gear) Not used on this product
11		1		Clutch Cover (Gear) Not used on this product
12		1		Pressure Plate (Gear) Not used on this product
13		1		Pressure Plate (Gear) Not used on this product
14		1		Release Lever Sub Ass'y. (Gear) Not used on this product
15		1		Release Rod Sub Ass'y. (Gear) Not used on this product
17		1		Diaphragm Spring (Gear) Not used on this product
18		1		Nut (Gear) Not used on this product
19		1		Bolt (Gear) Not used on this product
20		1		Knock Pin (Gear) Not used on this product
22		1		Pin (Gear) Not used on this product
23		1		Pin (Gear) Not used on this product
24		1		Pin (Gear) Not used on this product
25		1		Washer (Gear) Not used on this product
26		1		Pin, Split (Gear) Not used on this product
27		1		Adjust Bolt (Gear) Not used on this product
28		1		Nut (Gear) Not used on this product
29		1		Clutch Disc Ass'y. (Gear) Not used on this product
30		1		Clutch Disc Ass'y. (Gear) Not used on this product
32		1		Bolt (Gear) Not used on this product
33		1		Washer (Gear) Not used on this product

www.mymowerparts.com

For Discount Cub Cadet Parts Call 606-678-9623 or 606-561-4983

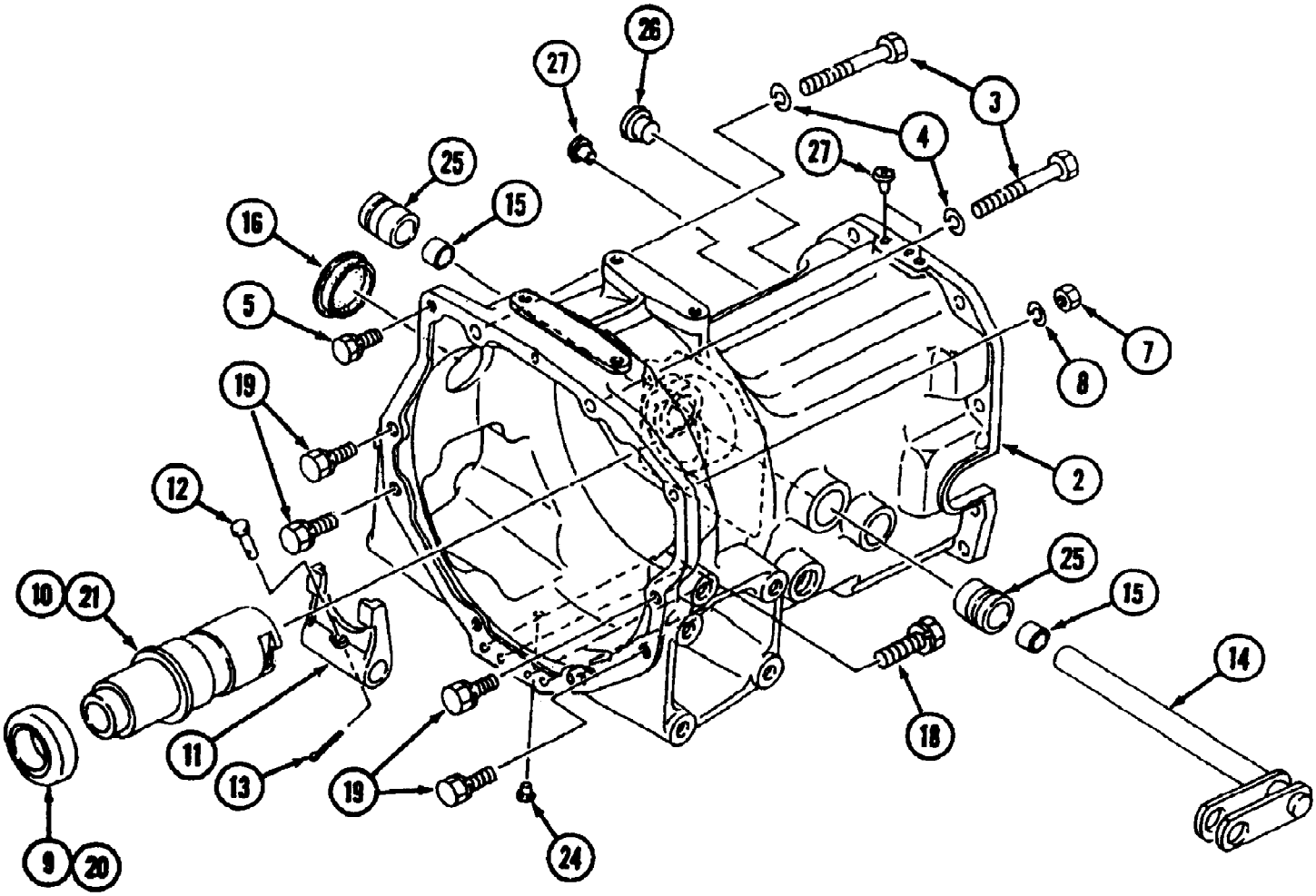

www.mymowerparts.com

For Discount Cub Cadet Parts Call 606-678-9623 or 606-561-4983

Ref #	Part Number	Qty	S/P/F	Description
2	MA-19671012AG0	1		Housing, Clutch
3	MA-A0550112100	2		Bolt
4	MA-A3600101202	2		Washer
5	MA-F1550110025	1		Bolt
7	MA-A3030110002	1		Nut
8	MA-A3600101002	1	/P	Washer, Lock
9		1		Bearing, Release (Gear) Not used on this product
10		1		Hub, Release (Gear) Not used on this product
11	MA-19631016000	1		Lever, Release
12	MA-05621108040	1		Pin, Clevis
13	MA-05200125016	1	S	Pin, Split
14	MA-19631014AG0	1		Shaft, Release
15	MA-07972020150	2		Bushing
16	MA-13333103000	1		Cap
18	MA-F1550110035	4		Bolt
19	MA-F1550112030	4	/P	Bolt
20	MA-11801156000	1		Bearing, Release (HST)
21	MA-19631013000	1		Hub, Release (HST)
24	MA-27613733000	1		Cap
25	MA-19631017000	2		Boss
26	MA-11190573000	1		Plug (HST)
27	MA-05534-10000	3		Plug

www.mymowerparts.com

For Discount Cub Cadet Parts Call 606-678-9623 or 606-561-4983

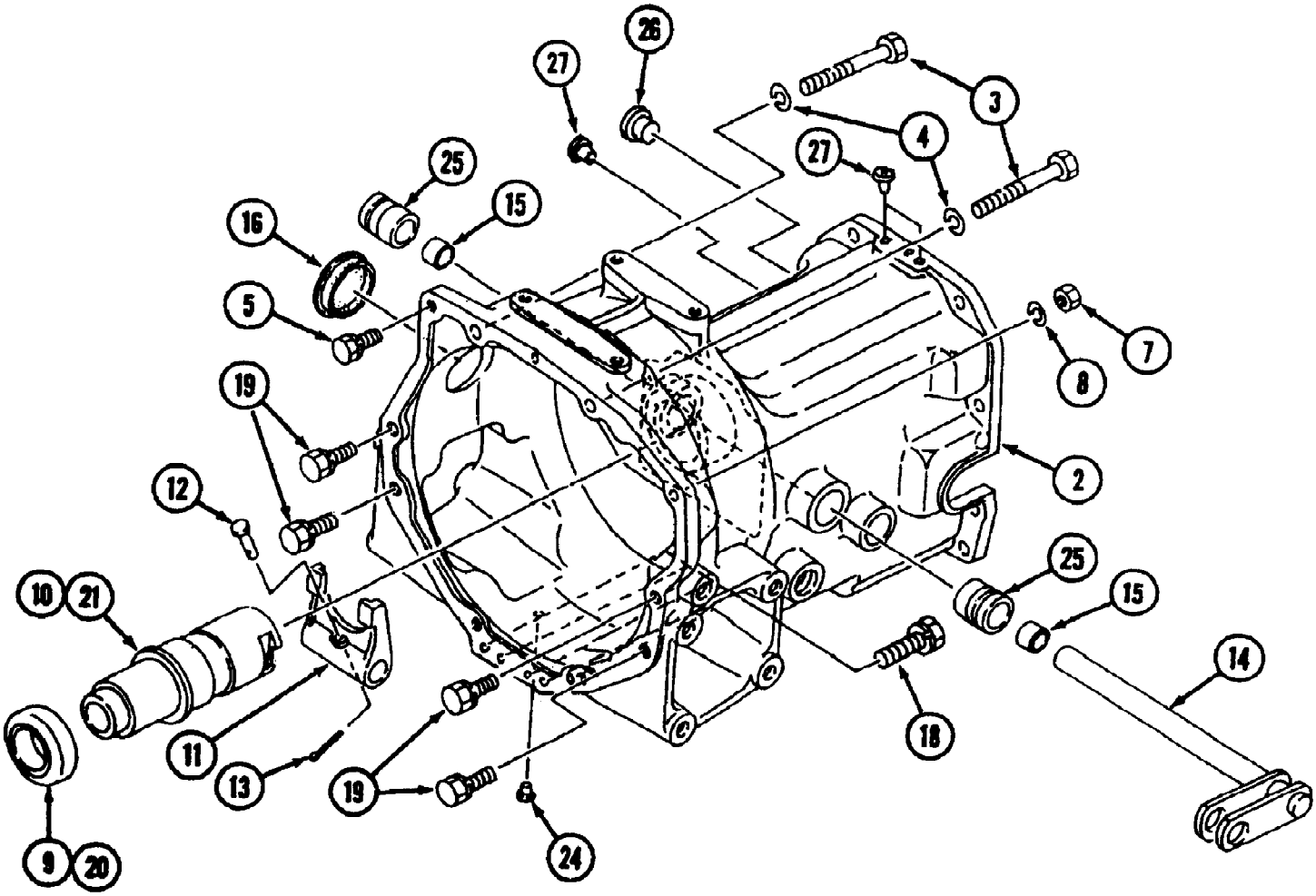

www.mymowerparts.com

For Discount Cub Cadet Parts Call 606-678-9623 or 606-561-4983

Ref #	Part Number	Qty	S/P/F	Description
2	MA-19671012AG0	1		Housing, Clutch
3	MA-A0550112100	2		Bolt
4	MA-A3600101202	2		Washer
5	MA-F1550110025	1		Bolt
7	MA-A3030110002	1		Nut
8	MA-A3600101002	1	/P	Washer, Lock
9	MA-11761015000	1		Bearing, Release (Gear)
10	MA-19631015000	1		Hub, Release (Gear)
11	MA-19631016000	1		Lever, Release
12	MA-05621108040	1		Pin, Clevis
13	MA-05200125016	1	S	Pin, Split
14	MA-19631014AG0	1		Shaft, Release
15	MA-07972020150	2		Bushing
16	MA-13333103000	1		Cap
18	MA-F1550110035	4		Bolt
19	MA-F1550112030	4	/P	Bolt
20		1		Bearing, Release (HST) Not used on this product
21		1		Hub, Release (HST) Not used on this product
24	MA-27613733000	1		Cap
25	MA-19631017000	2		Boss
26		1		Plug (HST) Not used on this product
27	MA-05534-10000	3		Plug

www.mymowerparts.com

For Discount Cub Cadet Parts Call 606-678-9623 or 606-561-4983

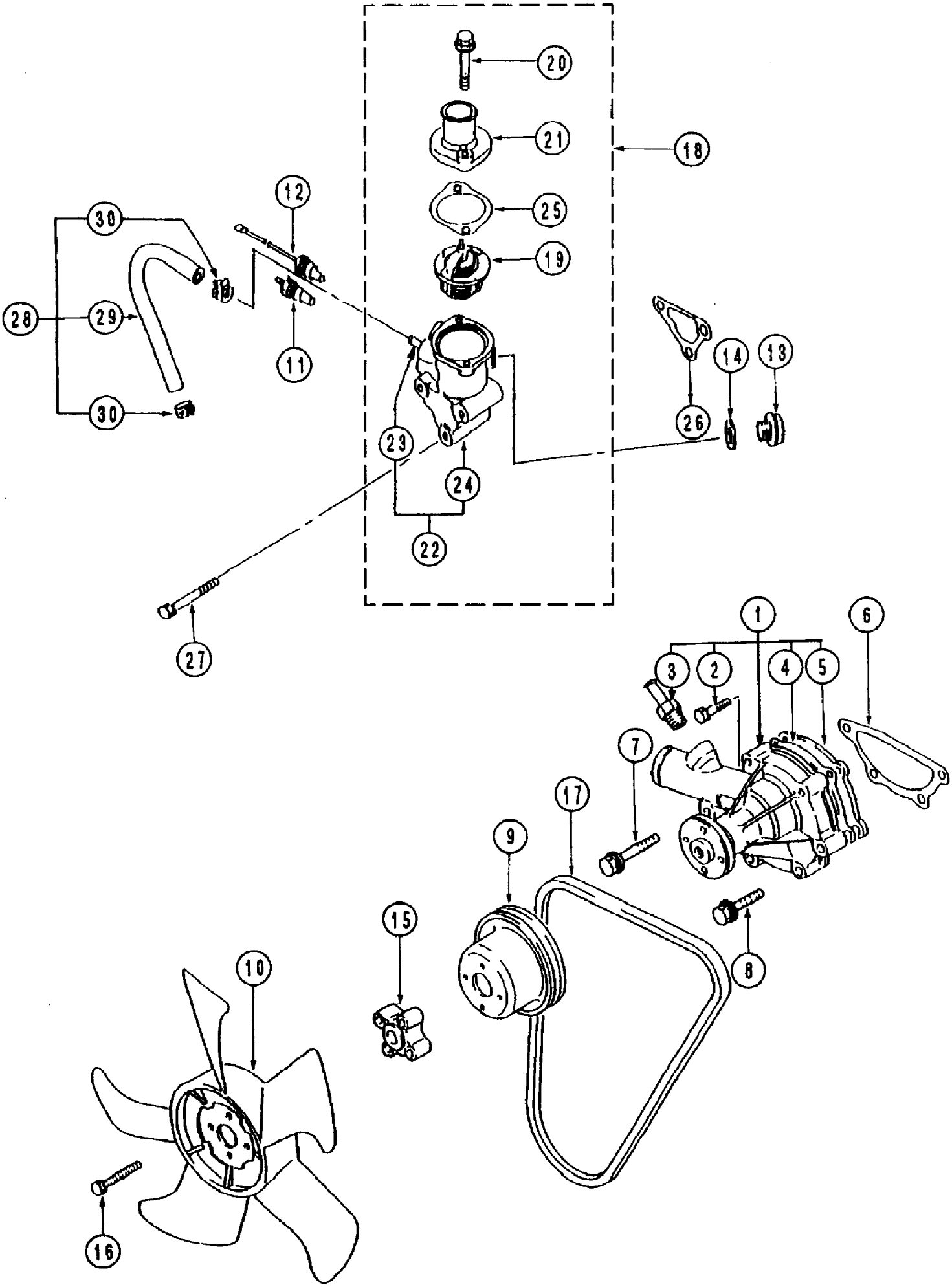

www.mymowerparts.com

For Discount Cub Cadet Parts Call 606-678-9623 or 606-561-4983

Ref #	Part Number	Qty	S/P/F	Description
1	MA-MM409302	1		Pump Ass'y., Water
2	MA-F1440106030	2		Bolt, W/Washer
3	MA-MM409314	1		Joint
4	MA-MM409326	1		Gasket
5	MA-MM409327	1		Plate
6	MA-30H45-00100	1	S	Gasket, Water Pump
7	MA-F1825-08045	3		Bolt, W/Washer
8	MA-F1825-08060	1		Bolt, W/Washer
9	MA-31A45-20700	1		Pulley, W/Pump 89
10	MA-MD009014	1	/P	Fan, Cooling
11	MA-MD001380	1		Gauge, Unit Water
12	MA-31A90-02100	1		Switch Ass'y., Thermo.
13	MA-MM316248	1		Plug, Drain
14	MA-30636-35900	1		Gasket
15	MA-MM434493	1		Spacer, Fan
16	MA-F1440106025	4		Bolt, W/Washer
17	MA-MD041704	1		V-Belt
18		1		Thermostat Ass'y. Furnish Component Parts
19	MA-MD001370	1		Thermostat
20	MA-MF140227	2		Bolt, Flange
21	MA-MM40931301	1	/P	Cover, Thermostat
22	MA-31A46-00062	1	S	Case Ass'y., Thermostat
23		1		Pipe, Thermostat
24		1		Case, Thermostat
25	MA-31A46-01200	1	S	Gasket, Thermostat
26	MA-31A46-10101	1		Gasket, Thermo.Case
27	MA-F1805-08065	3	/P	Bolt, W/Washer
28	MA-MM413196	1		Hose Ass'y, Fuel
29		1		Hose, Fuel
30	MA-MS660164	2		Clip

www.mymowerparts.com

For Discount Cub Cadet Parts Call 606-678-9623 or 606-561-4983

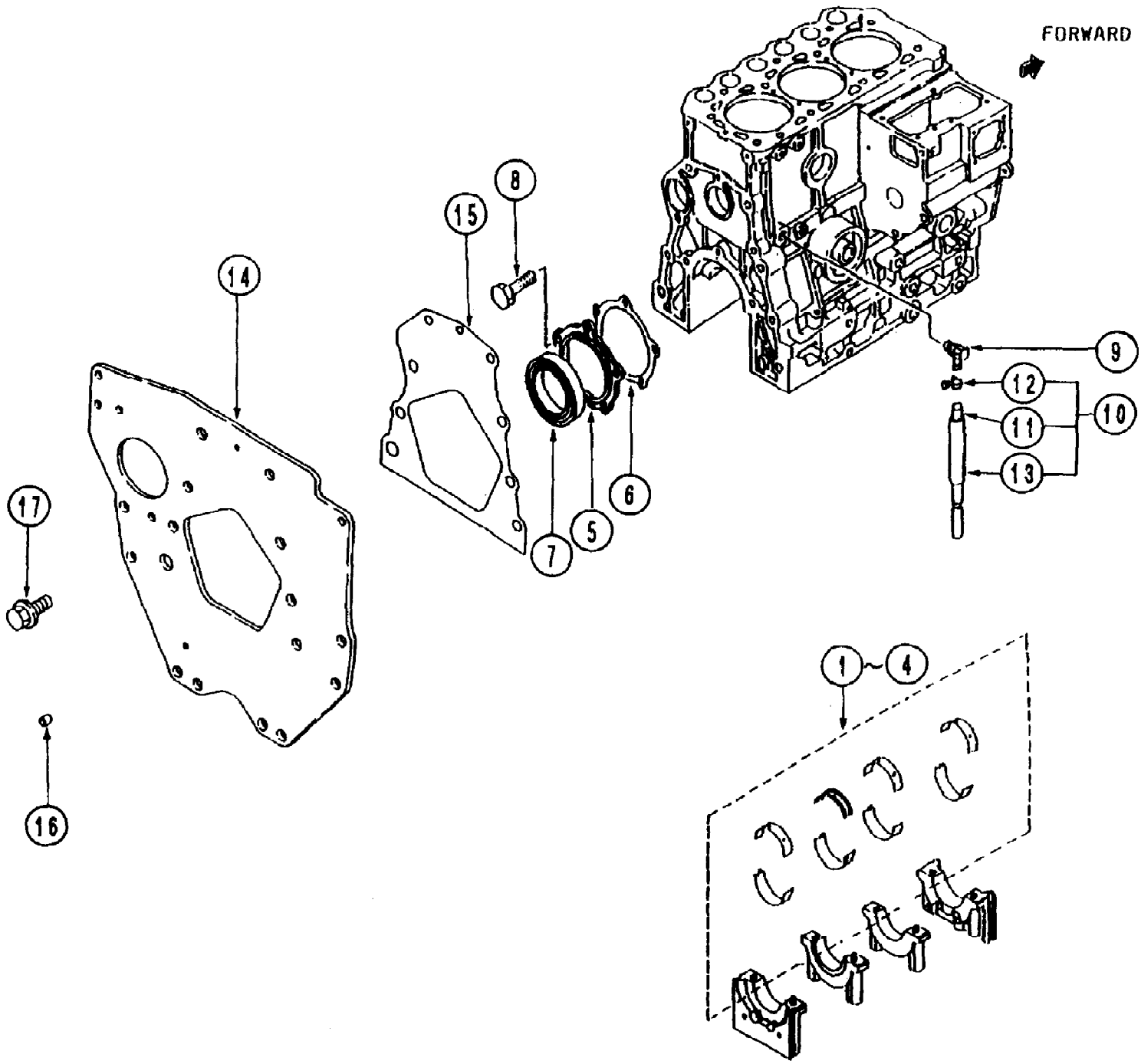

www.mymowerparts.com

For Discount Cub Cadet Parts Call 606-678-9623 or 606-561-4983

Ref #	Part Number	Qty	S/P/F	Description
1	MA-MM437880	1	S	Metal Set STD
2	MA-MM437881	1	S	Metal Set U.S 0.25
3	MA-MM437882	1		Metal Set U.S 0.50
4	MA-MM437883	1	S	Metal Set U.S 0.75
5	MA-31A07-11600	1	S	Case, Oil Seal
6	MA-31A07-11701	1		Gasket, Oil Seal Case
7	MA-31A07-02300	1		Seal, Oil
8	MA-F1035-08020	5	/P	Bolt
9	MA-MM408260	1	S	Joint, Water Drain
10		1		Hose Ass'y., Water Furnish Component Parts
11	MA-MS602081	1		Hose Fuel
12	MA-MS660163	1		Clip
13	MA-MM43721501	1		Hose, Rubber
14	MA-31B07-24300	1	S	Plate, Rear
15	MA-31A07-02401	1		Gasket, Rear Plate
16	MA-MM408240	1		Pin, Knock
17	MA-31A08-04101	6	S	Bolt, Flange

www.mymowerparts.com

For Discount Cub Cadet Parts Call 606-678-9623 or 606-561-4983

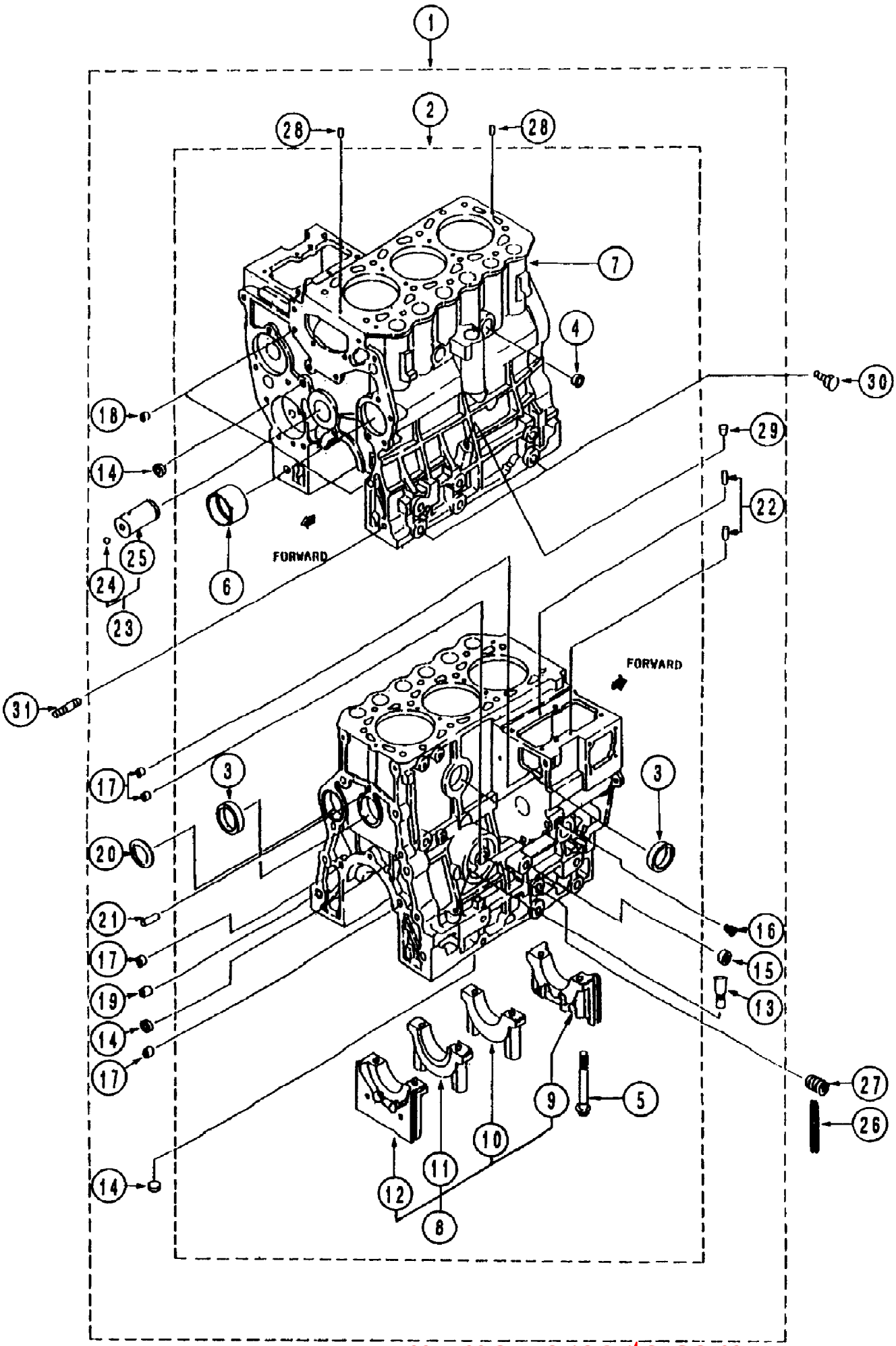

www.mymowerparts.com

For Discount Cub Cadet Parts Call 606-678-9623 or 606-561-4983

Ref #	Part Number	Qty	S/P/F	Description
1	MA-31B07-02090	1	S	Block Ass'y., Cylinder
2		1		Block Sub Ass'y., Cylinder
3	MA-MD000245	2	S	Cap, Sealing
4	MA-MF665536	2	S	Cap, Sealing
5	MA-31A07-00800	8		Bolt, Bearing Cap
6	MA-31A07-03100	1		Bush, Camshaft
7		1		Block, Cylinder
8		1		Cap Set, Metal
9		1		Cap, Metal Front
10		1		Cap, Metal No.2
11		1		Cap, Metal No.3
12		1		Cap, Metal Rear
13	MA-MM434729	1		Retainer, Oil Level
14	MA-MF665532	3		Cap, Sealing (12)
15	MA-MF665533	1		Cap, Sealing
16	MA-MS661140	1		Plug, Taper
17	MA-MS471104	4		Bushing, Knock
18	MA-MS471105	2		Bushing, Knock
19	MA-MS471110	1		Bushing, Knock
20	MA-MF665511	1	S	Plug, Expansion
21	MA-MF472404	1		Pin, Dowel
22	MA-MM409645	2		Pin, Dowel
23	MA-31A23-00051	1		Shaft Ass'y., Idler
24	MA-08000000600	1		Ball, Steel
25		1		Shaft, Idler
26	MA-31A07-12200	4		Seal, Side
27	MA-30L07-00700	1	/P	Shaft, Oil Filter
28	MA-F2846-05000	2		Pin, Dowel
29	MA-MD024256	1		Plug, Taper
30	MA-F1035-12025	4		Bolt
31	MA-31A07-02500	2		Stud

www.mymowerparts.com

For Discount Cub Cadet Parts Call 606-678-9623 or 606-561-4983

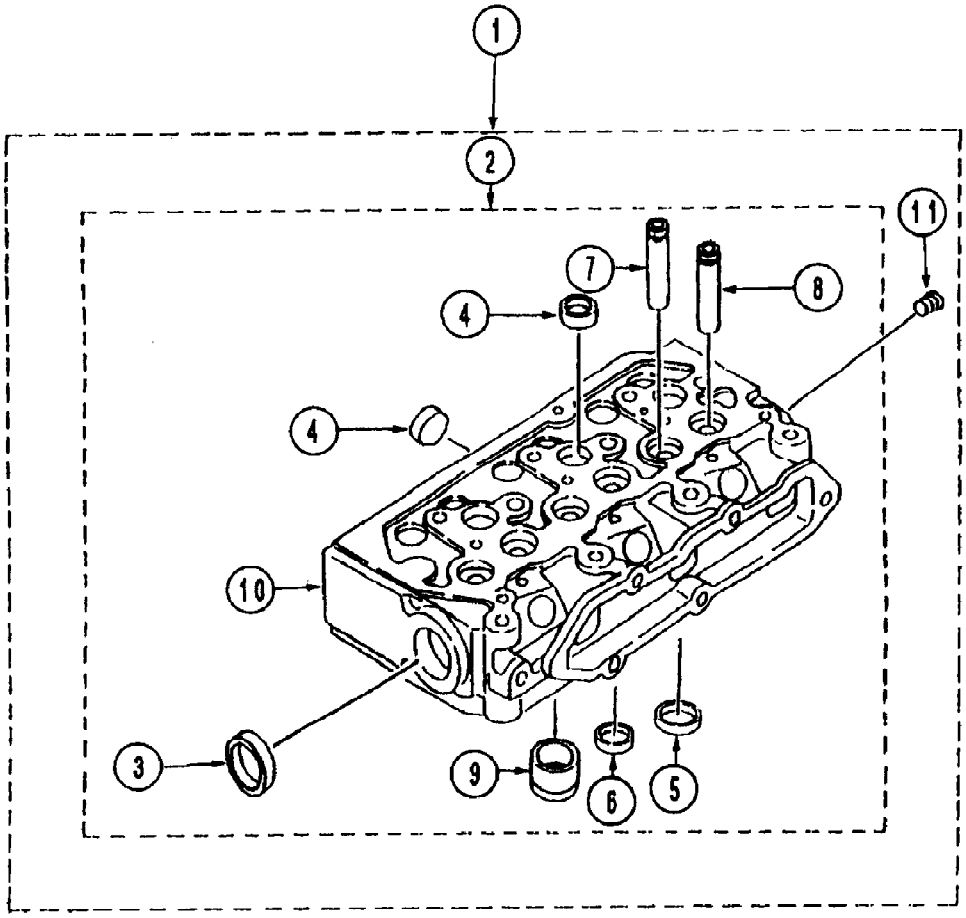

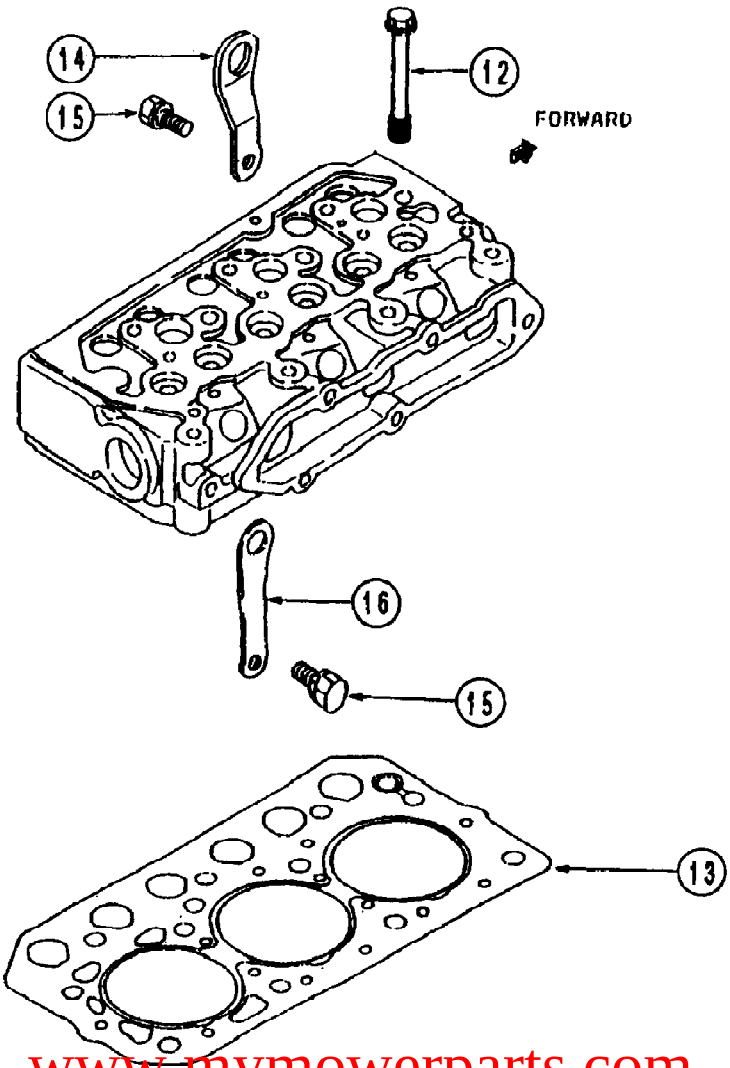

www.mymowerparts.com

For Discount Cub Cadet Parts Call 606-678-9623 or 606-561-4983

Ref #	Part Number	Qty	S/P/F	Description
1	MA-31B01-21020	1	S	Head Ass'y., Cylinder
2		1		Head Sub Ass'y, Cylinder
3	MA-MD000245	1	S	Cap, Sealing
4	MA-MF665538	5	S	Cap, Sealing
5		3		Seat, Valve, In.
6		3		Seat, Valve, Ex.
7	MA-31A01-02500	3		Guide, Exhaust Valve
8	MA-31A01-02600	3		Guide, Inlet Valve
9	MA-31A03-01101	3		Jet, Combustion
10		1		Cyl.Head Ass'y.
11	MA-MS661140	1		Plug, Taper
12	MA-31A01-11100	11	S	Bolt, Cylinder Head
13	MA-31B01-23200	1		Gasket, Cylinder Head
14	MA-MM408470	1		Hanger, Engine
15	MA-F1550110020	2		Bolt, W/Washer
16	MA-31A01-04100	1		Hanger, Engine

www.mymowerparts.com

For Discount Cub Cadet Parts Call 606-678-9623 or 606-561-4983

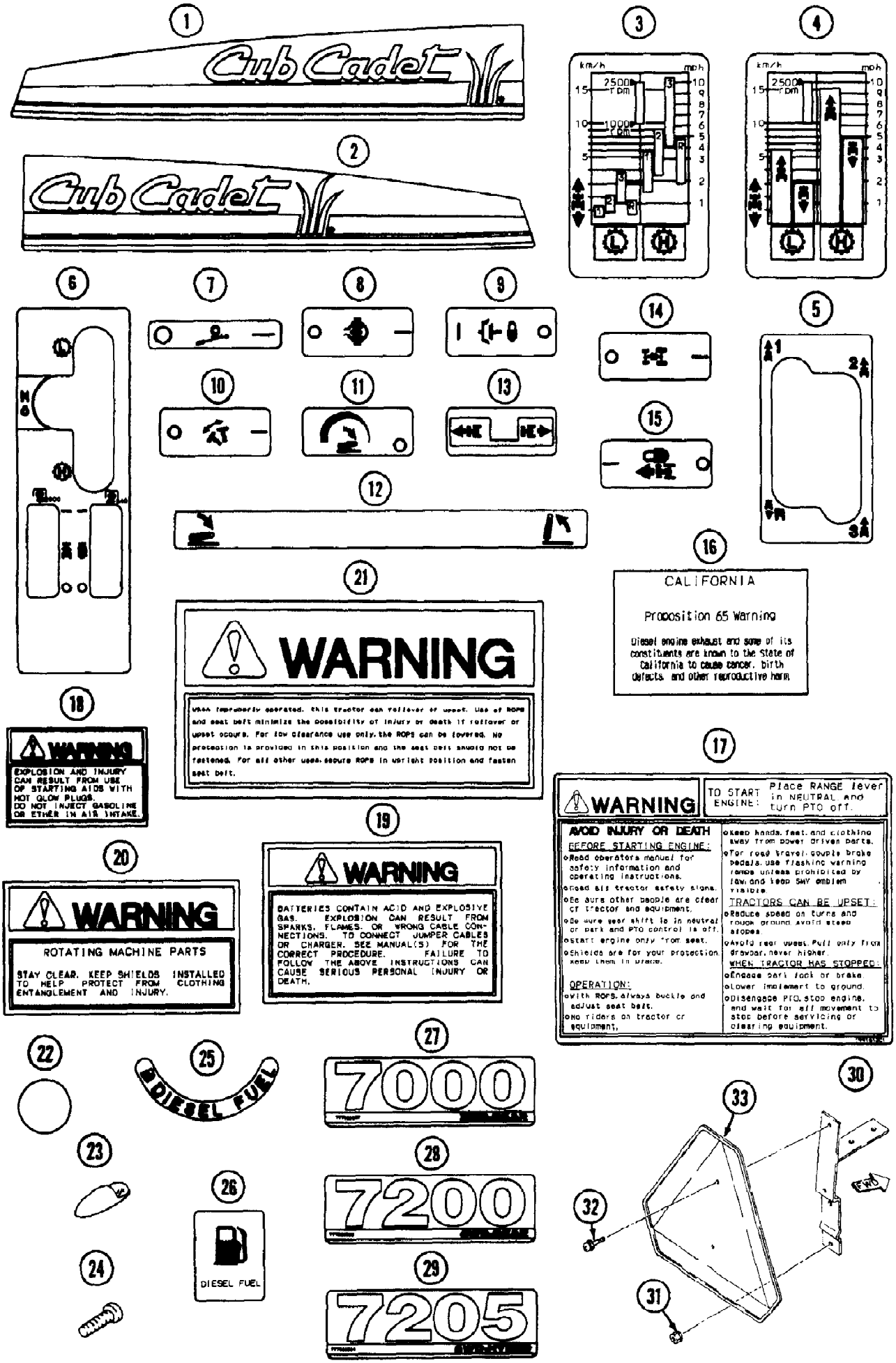

www.mymowerparts.com

For Discount Cub Cadet Parts Call 606-678-9623 or 606-561-4983

Ref #	Part Number	Qty	S/P/F	Description
1	MA-19672708000	1	S	Label, Side L.H.
2	MA-19672709000	1	S	Label, Side R.H.
3	MA-19632711000	1		Label, Speed G
4		1		Label, Speed H Not used on this product
5	MA-19632714000	1		Label, Main
6	MA-19632715000	1		Label, Range
7	MA-19672718000	1		Label, Brake
8	MA-19632718000	1		Label, Diff Lock
9	MA-19632721000	1		Label, Declutch
10	MA-19632722000	1		Label, Tilt
11	MA-19632723000	1		Label, D.R. Cont
12	MA-19642781000	1		Label, Position
13		1		Label, HST Cont Not used on this product
14		1		Label, MFD Not used on this product
15		1		Label, Sp Cont Not used on this product
16	MA-19672725000	1		Label, Propositi
17	MA-19632737000	1		Label, Warning
18	MA-19042746000	1		Label, Warning
19	MA-19042759000	1		Label, Warning
20	MA-19042761000	1		Label, Warning
21	MA-19042765001	1		Label, Warning
22	MA-19042711001	1		Label, Strg
23	MA-10382767000	1		Mark, Center
24	MA-04322104006	1		Screw
25	MA-19672727000	1		Mark, Fuel
26	MA-19672728000	1		Mark, Fuel
27	MA-19672761000	2		Label, Model
28		1		Label, Model Not used on this product
29		1		Label, Model Not used on this product
30	MA-19632881BD0	1		Bracket, SMV
31	MA-F3010108001	2		Nut
32	MA-H2420106016	2		Screw
33	779-3618	1	S	Emblem, SMV

www.mymowerparts.com

For Discount Cub Cadet Parts Call 606-678-9623 or 606-561-4983

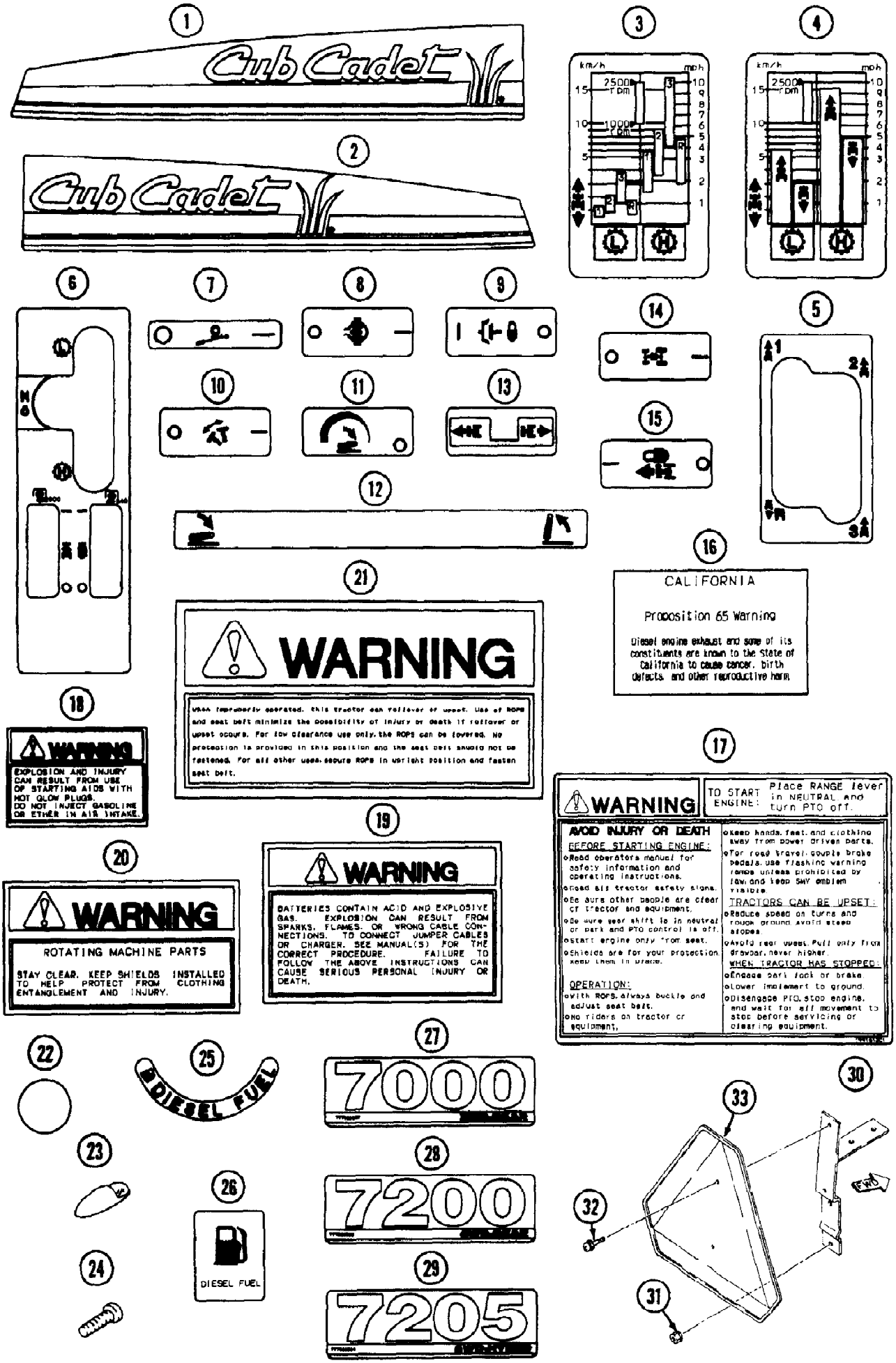

www.mymowerparts.com

For Discount Cub Cadet Parts Call 606-678-9623 or 606-561-4983

Ref #	Part Number	Qty	S/P/F	Description
1	MA-19672708000	1	S	Label, Side L.H.
2	MA-19672709000	1	S	Label, Side R.H.
3	MA-19632711000	1		Label, Speed G
4		1		Label, Speed H Not used on this product
5	MA-19632714000	1		Label, Main
6	MA-19632715000	1		Label, Range
7	MA-19672718000	1		Label, Brake
8	MA-19632718000	1		Label, Diff Lock
9	MA-19632721000	1		Label, Declutch
10	MA-19632722000	1		Label, Tilt
11	MA-19632723000	1		Label, D.R. Cont
12	MA-19642781000	1		Label, Position
13		1		Label, HST Cont Not used on this product
14	MA-19632731000	1		Label, MFD
15		1		Label, Sp Cont Not used on this product
16	MA-19672725000	1		Label, Propositi
17	MA-19632737000	1		Label, Warning
18	MA-19042746000	1		Label, Warning
19	MA-19042759000	1		Label, Warning
20	MA-19042761000	1		Label, Warning
21	MA-19042765001	1		Label, Warning
22	MA-19042711001	1		Label, Strg
23	MA-10382767000	1		Mark, Center
24	MA-04322104006	1		Screw
25	MA-19672727000	1		Mark, Fuel
26	MA-19672728000	1		Mark, Fuel
27		1		Label, Model Not used on this product
28	MA-19672762000	2		Label, Model
29		1		Label, Model Not used on this product
30	MA-19632881BD0	1		Bracket, SMV
31	MA-F3010108001	2		Nut
32	MA-H2420106016	2		Screw
33	779-3618	1	S	Emblem, SMV

www.mymowerparts.com

For Discount Cub Cadet Parts Call 606-678-9623 or 606-561-4983

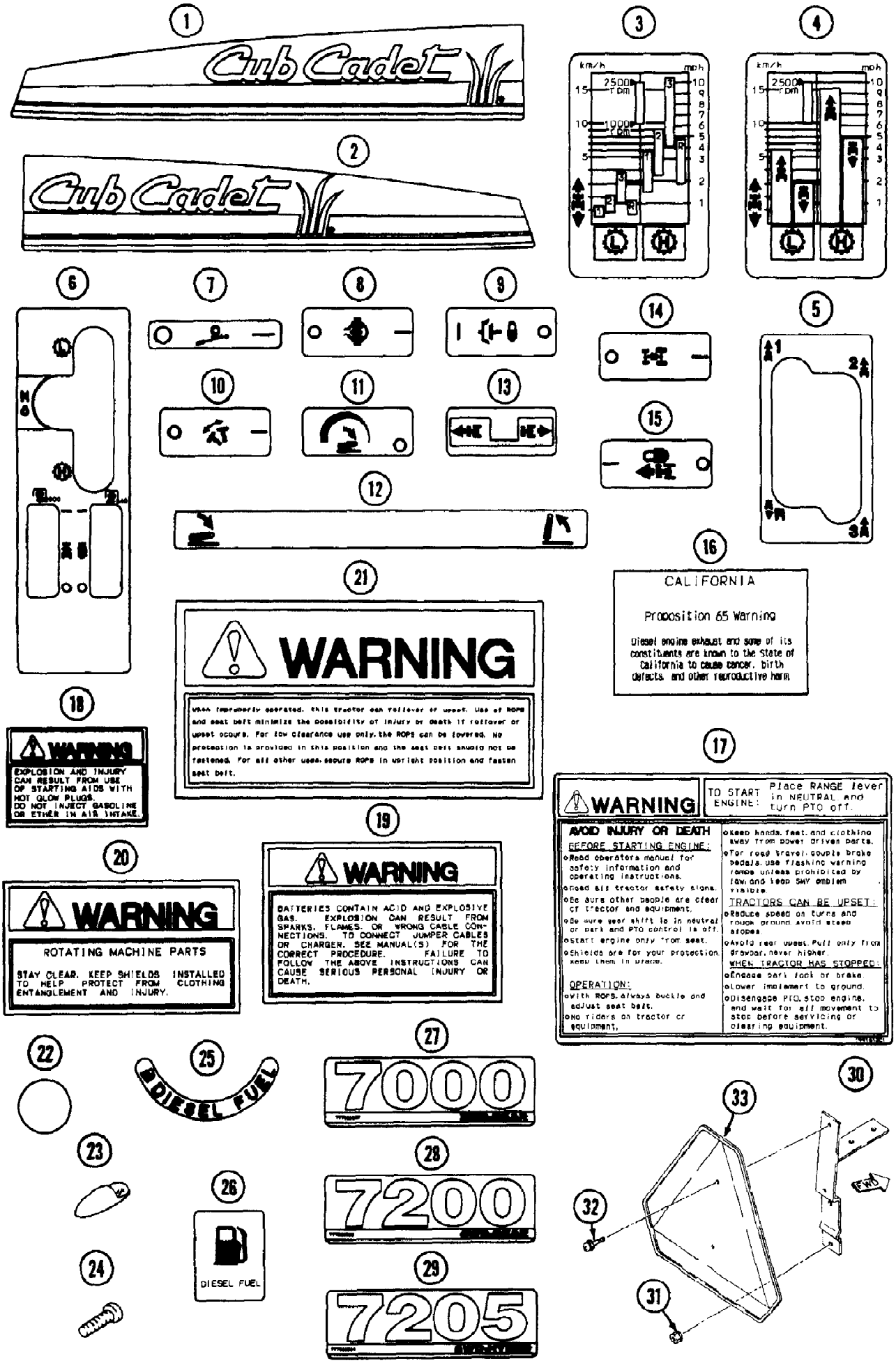

www.mymowerparts.com

For Discount Cub Cadet Parts Call 606-678-9623 or 606-561-4983

Ref #	Part Number	Qty	S/P/F	Description
1	MA-19672708000	1	S	Label, Side L.H.
2	MA-19672709000	1	S	Label, Side R.H.
3		1		Label, Speed G Not used on this product
4	MA-19632712000	1		Label, Speed H
5		1		Label, Main Not used on this product
6	MA-19632715000	1		Label, Range
7	MA-19672718000	1		Label, Brake
8	MA-19632718000	1		Label, Diff Lock
9	MA-19632721000	1		Label, Declutch
10	MA-19632722000	1		Label, Tilt
11	MA-19632723000	1		Label, D.R. Cont
12	MA-19642781000	1		Label, Position
13	MA-19632727000	1		Label, HST Cont
14		1		Label, MFD Not used on this product
15	MA-19632732000	1		Label, Sp Cont
16	MA-19672725000	1		Label, Propositi
17	MA-19632737000	1		Label, Warning
18	MA-19042746000	1		Label, Warning
19	MA-19042759000	1		Label, Warning
20	MA-19042761000	1		Label, Warning
21	MA-19042765001	1		Label, Warning
22	MA-19042711001	1		Label, Strg
23	MA-10382767000	1		Mark, Center
24	MA-04322104006	1		Screw
25	MA-19672727000	1		Mark, Fuel
26	MA-19672728000	1		Mark, Fuel
27		1		Label, Model Not used on this product
28		1		Label, Model Not used on this product
29		1		Label, Model Not used on this product
30	MA-19632881BD0	1		Bracket, SMV
31	MA-F3010108001	2		Nut
32	MA-H2420106016	2		Screw
33	779-3618	1	S	Emblem, SMV

www.mymowerparts.com

For Discount Cub Cadet Parts Call 606-678-9623 or 606-561-4983

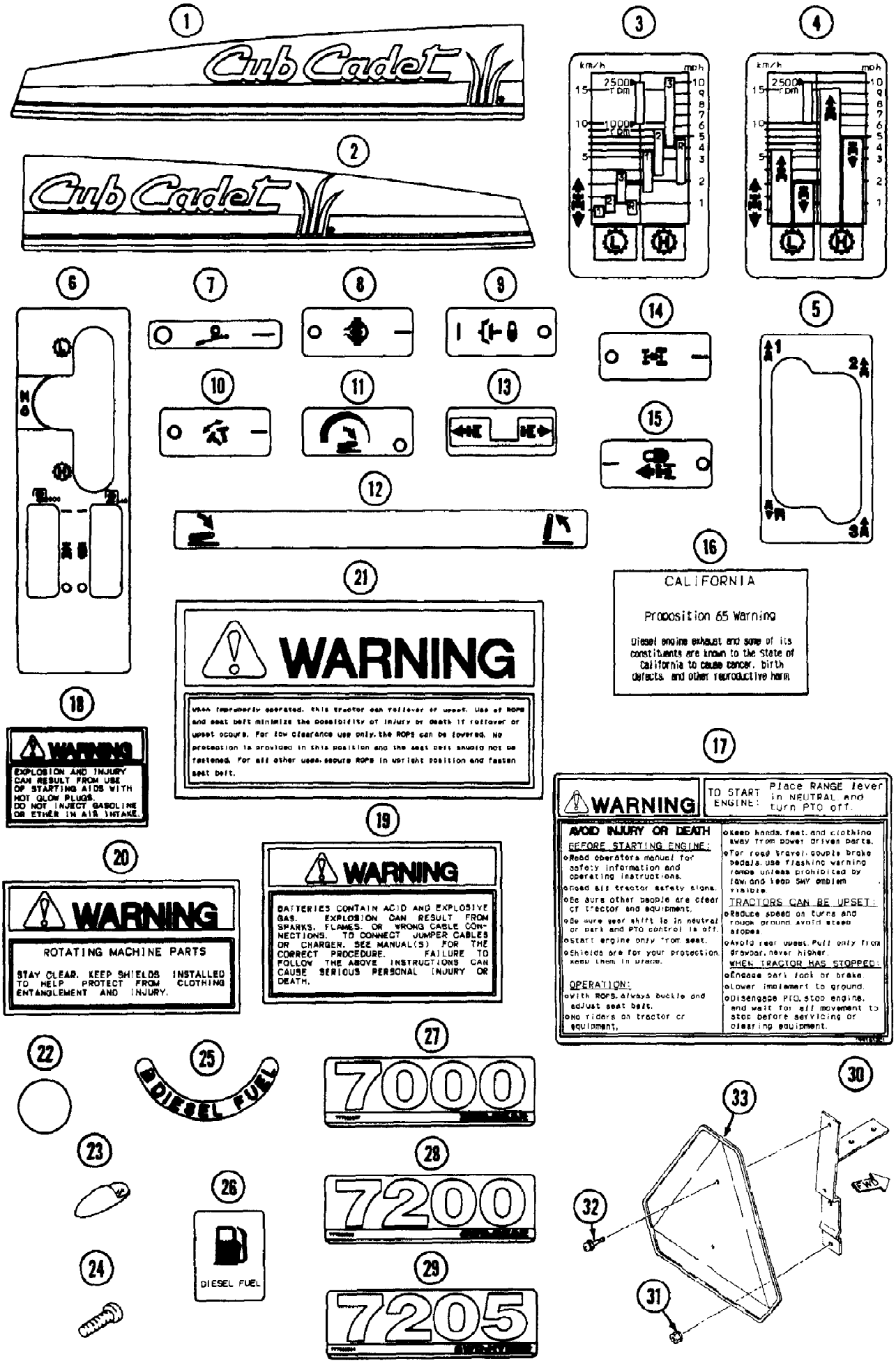

www.mymowerparts.com

For Discount Cub Cadet Parts Call 606-678-9623 or 606-561-4983

Ref #	Part Number	Qty	S/P/F	Description
1	MA-19672708000	1	S	Label, Side L.H.
2	MA-19672709000	1	S	Label, Side R.H.
3		1		Label, Speed G Not used on this product
4	MA-19632712000	1		Label, Speed H
5		1		Label, Main Not used on this product
6	MA-19632715000	1		Label, Range
7	MA-19672718000	1		Label, Brake
8	MA-19632718000	1		Label, Diff Lock
9	MA-19632721000	1		Label, Declutch
10	MA-19632722000	1		Label, Tilt
11	MA-19632723000	1		Label, D.R. Cont
12	MA-19642781000	1		Label, Position
13	MA-19632727000	1		Label, HST Cont
14	MA-19632731000	1		Label, MFD
15	MA-19632732000	1		Label, Sp Cont
16	MA-19672725000	1		Label, Propositi
17	MA-19632737000	1		Label, Warning
18	MA-19042746000	1		Label, Warning
19	MA-19042759000	1		Label, Warning
20	MA-19042761000	1		Label, Warning
21	MA-19042765001	1		Label, Warning
22	MA-19042711001	1		Label, Strg
23	MA-10382767000	1		Mark, Center
24	MA-04322104006	1		Screw
25	MA-19672727000	1		Mark, Fuel
26	MA-19672728000	1		Mark, Fuel
27		1		Label, Model Not used on this product
28		1		Label, Model Not used on this product
29	MA-19672763000	2		Label, Model
30	MA-19632881BD0	1		Bracket, SMV
31	MA-F3010108001	2		Nut
32	MA-H2420106016	2		Screw
33	779-3618	1	S	Emblem, SMV

www.mymowerparts.com

For Discount Cub Cadet Parts Call 606-678-9623 or 606-561-4983

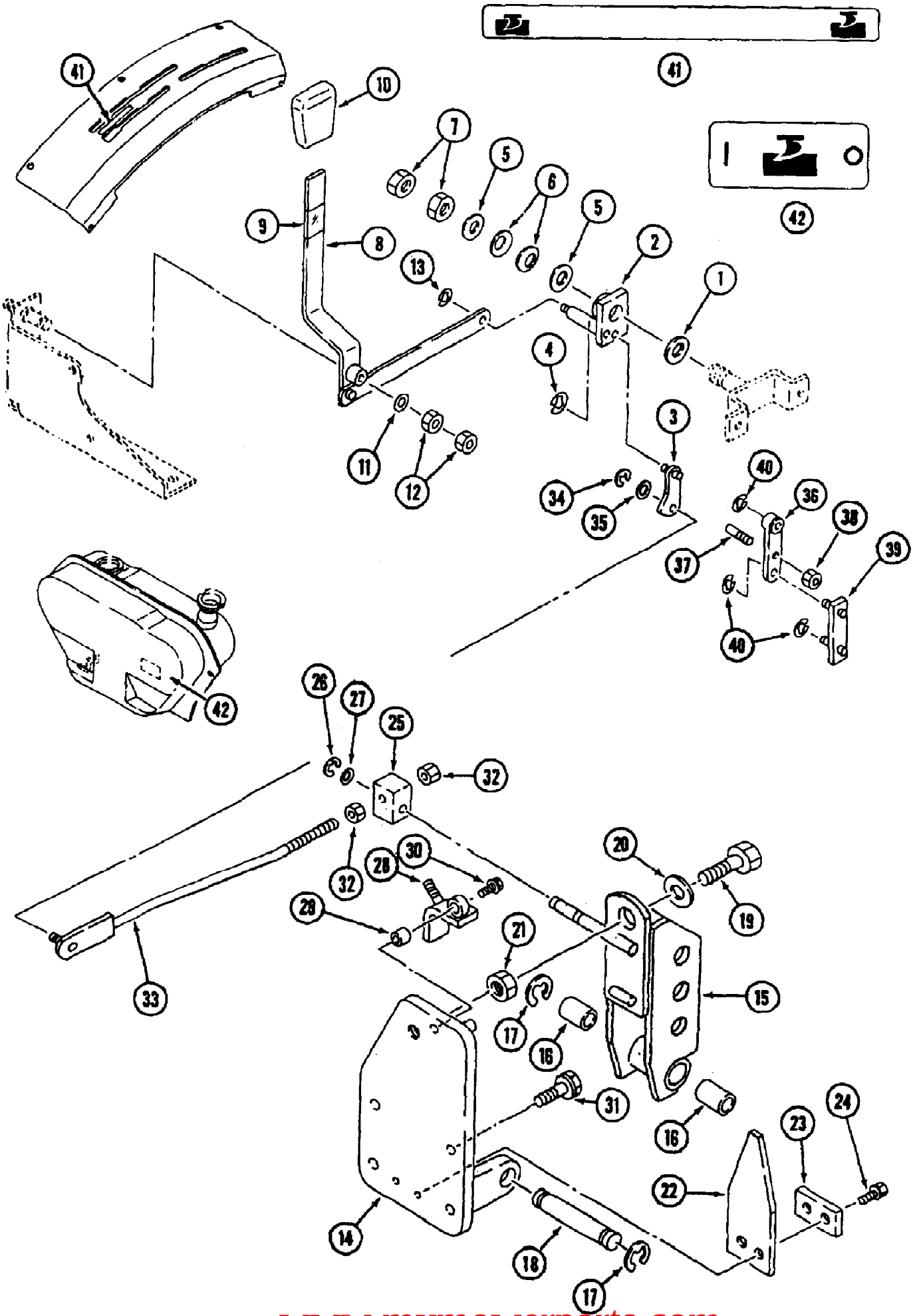

www.mymowerparts.com

For Discount Cub Cadet Parts Call 606-678-9623 or 606-561-4983

Ref #	Part Number	Qty	S/P/F	Description
1	MA-19642468000	1		Sheet
2	MA-19642469000	1		Arm, Draft
3	MA-19642471000	1		Link, Draft
4	MA-07420100600	1		Ring
5	MA-03500162040	2		Washer
6	MA-03560102001	2		Spring
7	MA-A3030120003	2		Nut
	MA-19652472AG0	1		Lever, D/C Ass'y. Includes 8, 9
8	MA-19652473AG0	1		Lever, D/C Ass'y.
9	MA-19632439000	1		Tube
10	MA-11742449000	1		Grip
11	MA-03500150822	1		Washer
12	MA-A3010108002	2		Nut
13	MA-07420100600	1		Ring
14	MA-19652475AG0	1		Bracket
15	MA-19652476AG0	1		Bracket, Toplink
16	MA-07961020300	2		Bushing
17	MA-07420101500	2	S	Ring
18	MA-11742453000	1		Pin
19	MA-A0550116060	1		Bolt
20	MA-03500151632	1	/P	Washer
21	MA-A3030116002	1		Nut
22	MA-19862443AG0	1		Spring, Leaf
23	MA-19962405AG0	1		Plate
24	MA-F1550110030	2		Bolt
25	MA-19842429000	1		Block
26	MA-07420100800	1		Ring
27	MA-03500141022	1		Washer
28	MA-19652479000	1		Stopper
29	MA-67700-26000	1		Collar
30	MA-H1540108020	1		Bolt
31	MA-F1540112035	6		Bolt
32	MA-A3030110002	2		Nut
33	MA-19652477000	1		Rod, Draft
34	MA-07420100800	1		Ring
35	MA-03500141022	1		Washer
36	MA-19682429AG0	1		Arm, Select
37	MA-19292163000	1		Bolt
38	MA-A3010108002	1		Nut
39	MA-19652478000	1		Link
40	MA-07420100600	3		Ring
41	MA-19642782000	1		Label, Draft
42	MA-19642785000	1		Label, D.Lock

www.mymowerparts.com

For Discount Cub Cadet Parts Call 606-678-9623 or 606-561-4983

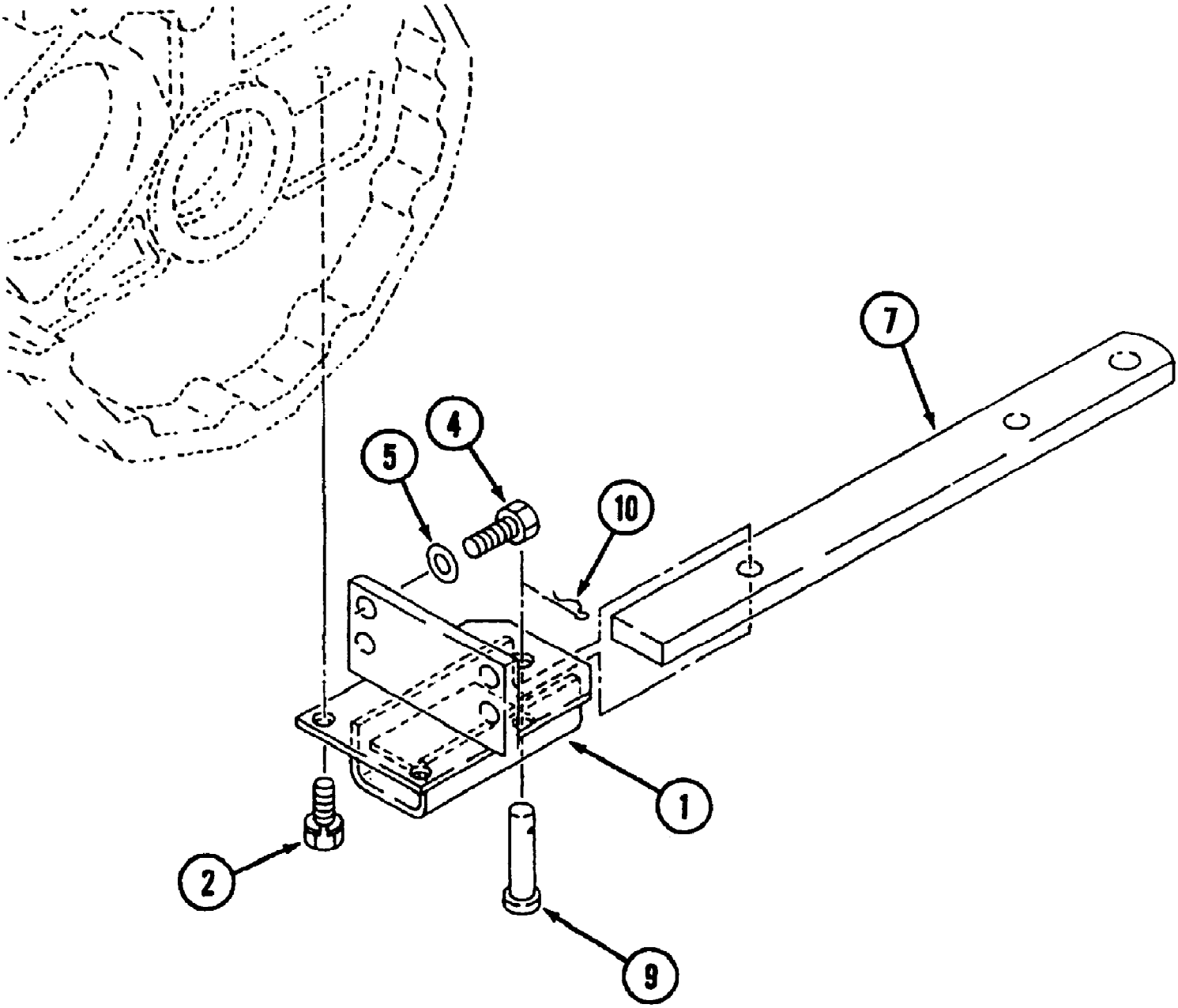

www.mymowerparts.com

For Discount Cub Cadet Parts Call 606-678-9623 or 606-561-4983

Ref #	Part Number	Qty	S/P/F	Description
1	MA-19633101AG0	1		Bracket
2	MA-H1550110030	2		Bolt
4	MA-A0400114035	4		Bolt
5	MA-03550161428	4		Washer
7	MA-19633102AG0	1		Drawbar
9	MA-05620116070	1		Pin, Clevis
10	MA-05210116000	1		Pin, Snap

www.mymowerparts.com

For Discount Cub Cadet Parts Call 606-678-9623 or 606-561-4983

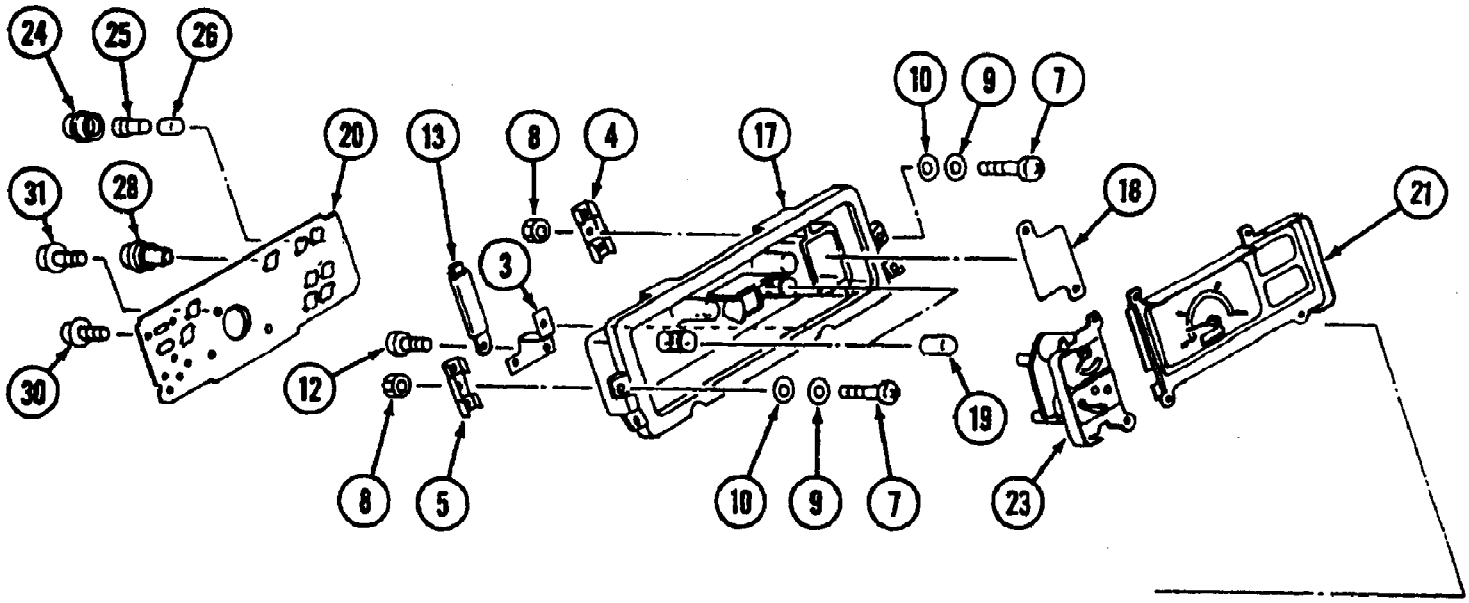

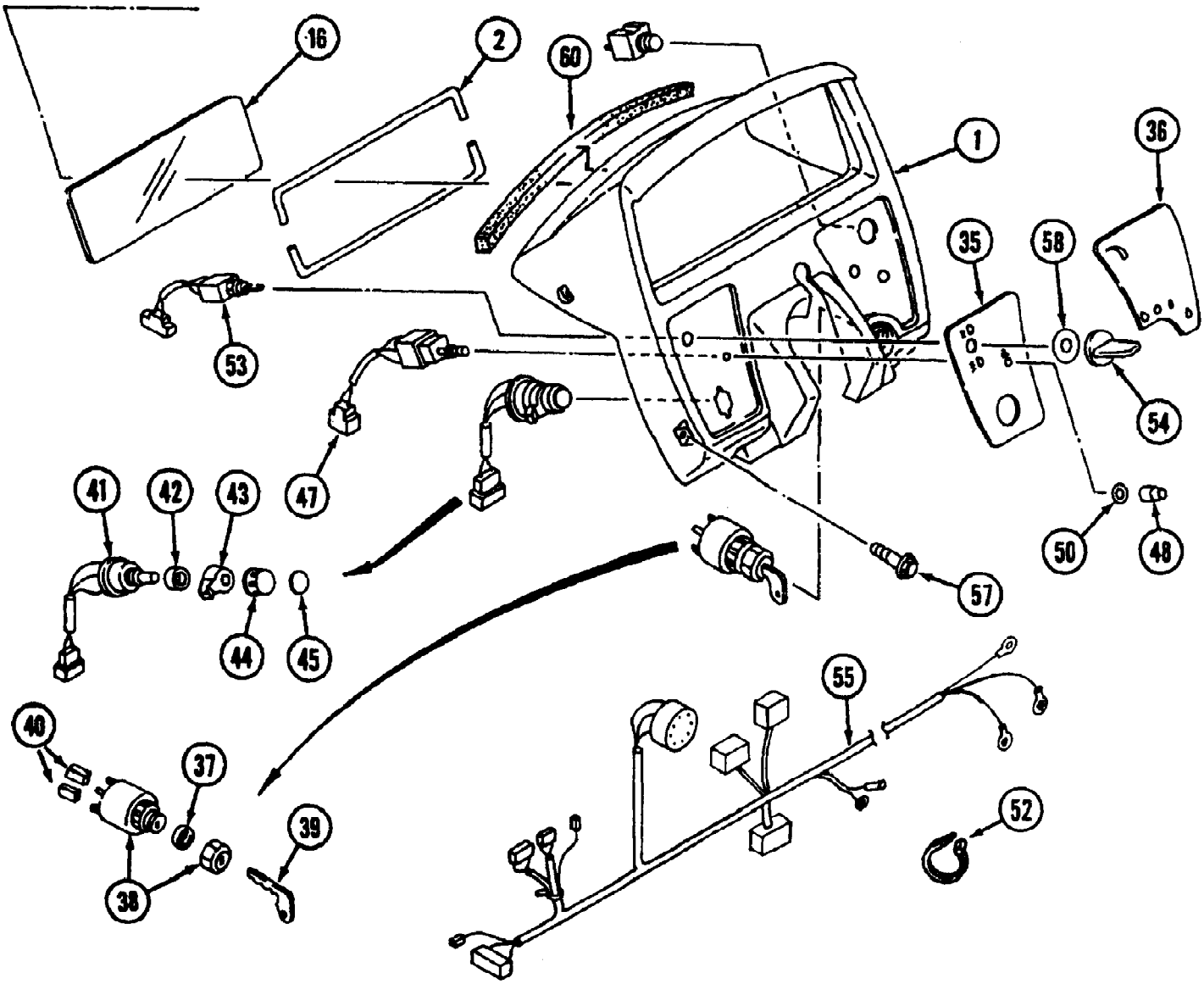

www.mymowerparts.com

For Discount Cub Cadet Parts Call 606-678-9623 or 606-561-4983

Ref #	Part Number	Qty	S/P/F	Description
	MA-19672932000	1		Panel Ass'y Includes 1-55, 58, 60
1	MA-10322851100	1		Panel
2	MA-10253501300	1		Packing
3	MA-10253501500	2		Bracket C
4	MA-10253501600	1		Bracket L
5	MA-10253501800	1		Bracket R
7	MA-A2420105016	4		Screw
8	MA-A3000105002	4		Nut
9	MA-A3600100502	4		Washer
10	MA-03500120512	4		Washer
12	MA-35180813900	8		Screw
13	MA-36630836200	2		Clamp
	MA-19672933000	1		Meter Ass'y Includes 16-31
16	MA-19632911200	1	S	Glass Ass'y
17	MA-10253502800	1		Case
18		1		Plate Monitor Not Sold Separately
19	MA-10253502820	2		Lens Indicator
20		1		Board,Print Not Sold Separately
21	MA-19632911530	1		Tachometer
23	MA-19632911540	1		Meter Fuel & Temp.
	MA-10253502300	4	/P	Bulb Ass'y Includes 24-26
24	MA-10253502310	4		Socket
25	MA-09808120348	4		Bulb
26	MA-10253502320	4	S	Cap
28	MA-10382831900	6		Bulb Ass'y
30	MA-H2420104010	4		Screw
31	MA-10253502900	2		Screw
35	MA-19632911700	1		Label, Panel L.H
36	MA-19672934000	1		Label,Panel R.H
	MA-10312888000	1	S	Starter Ass'y. Includes 37-40
37	MA-19042849000	1		Packing Starter
38	MA-10312889000	1	S	Switch Starter
39	MA-27800501200	1	/P	Key,Starter
40	MA-10253509000	2		Tube
	MA-19632916000	1	/P	Switch, Combination Includes 41-45
41	MA-19632916100	1	S	Switchbody Ass'y.
42	MA-35310806200	1		Ring Nut
43	MA-35310806300	1		Flasher Lever
44	MA-35310806400	1		Lighting Knob
45	MA-19632916300	1		Label Lamp
	MA-19632917000	1		Switch,Hazard Includes 47-50
47	MA-19632917200	1		Switch
48	MA-11742944000	1		Switch,Cover
50	MA-03500130615	1		Washer
52	MA-00511022030	1		Band Wire
53	MA-19632918000	1		Switch,Light H/L
54	MA-10322889000	1		Boot
	MA-19615024000	1		Boot Replaces MA-10322889000 when inventory is depleted
55	MA-19672935000	1		Harness P
57	MA-F0500406016	4		Bolt
58	MA-19632919000	1		Packing Rubber

www.mymowerparts.com

For Discount Cub Cadet Parts Call 606-678-9623 or 606-561-4983

Ref #	Part Number	Qty	S/P/F	Description
	MA-27901207000	1		Liner Replaces MA-19632919000
60	MA-37357619700	1		Seal Dust

www.mymowerparts.com

For Discount Cub Cadet Parts Call 606-678-9623 or 606-561-4983

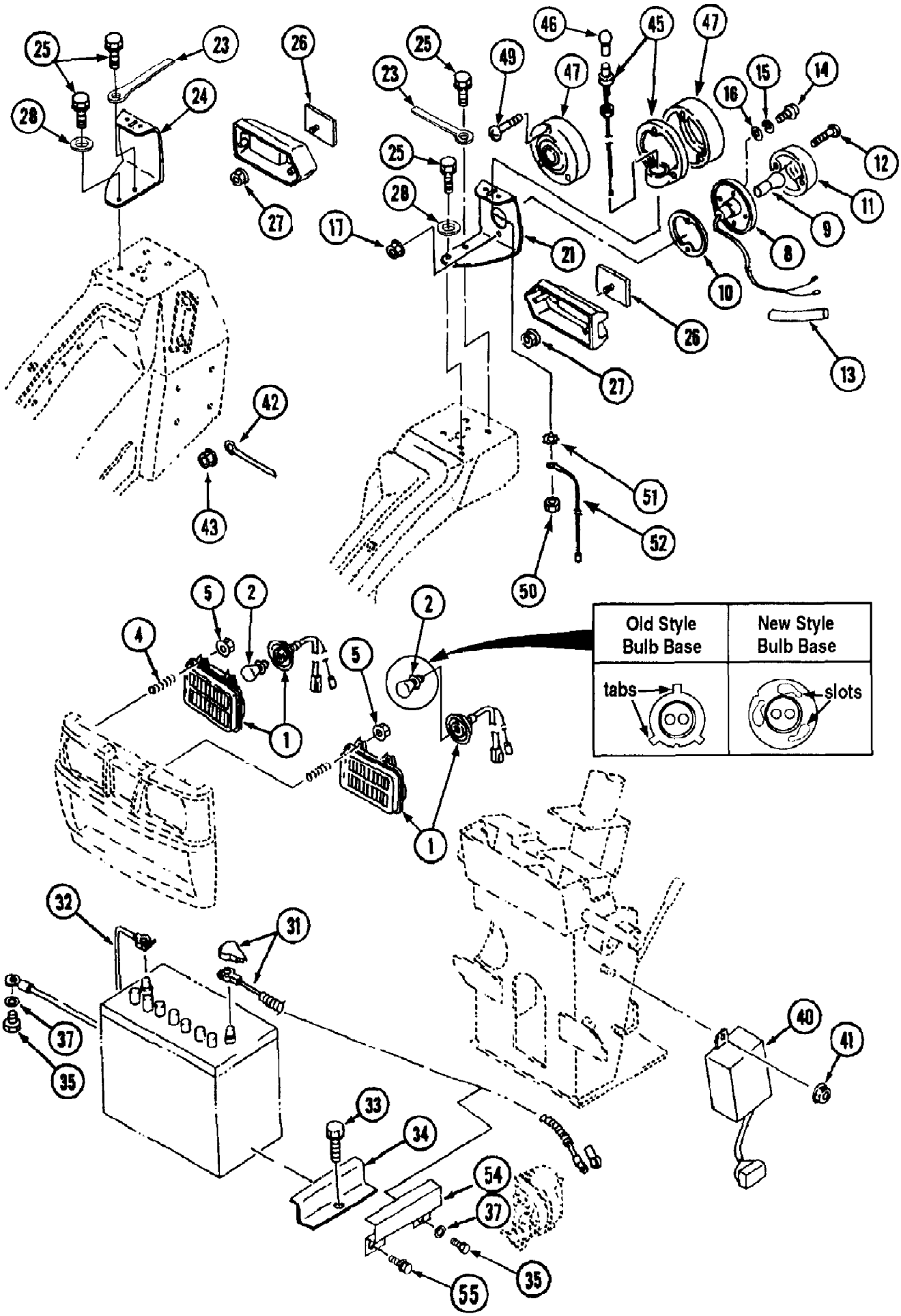

www.mymowerparts.com

For Discount Cub Cadet Parts Call 606-678-9623 or 606-561-4983

Ref #	Part Number	Qty	S/P/F	Description
1	MA-10362811001	2	F	Lamp, Head Includes 2
2	MA-67404-01720	2	/P/F	Bulb
	MA-09808123509	2	F	Bulb
4	MA-10192849001	6		Spring
5	MA-F3000105001	6		Nut, Flange
	MA-19822828000	1		Lamp, Tail Ass'y. Includes 8-16
8	MA-19822822110	1		Socket
9	MA-19822822120	1		Bulb
10	MA-19822822130	1		Gasket
11	MA-19822822140	1		Lens
12	MA-A2320103030	2		Screw
13	MA-19831744000	1		Tube
14	MA-A2420105012	2		Screw
15	MA-A3600100502	2		Washer, Spring
16	MA-03500120512	2		Washer
17	MA-F3000105001	2		Nut
21	MA-19632935AG1	1	/P	Bracket, Lamp L.H.
23	MA-00502113086	4		Clamp
24	MA-19632936AG1	1	/P	Bracket, Lamp R.H.
25	MA-F1540108012	6		Bolt
26	MA-10192279000	2		Reflector
27	MA-F3000106001	2		Nut, Flange
28	MA-03500140818	1		Washer
31	MA-19082987000	1		Cord Ass'y.
32	MA-19042983000	1		Cord, Battery
33	MA-F1540108016	2		Bolt
34	MA-19632955AG0	2		Clamp, Battery
35	MA-11792963000	2		FT Bolt
37	MA-A3600100802	2		Washer
40	MA-19672944000	1		Unit, Hazard
41	MA-F3000106000	1		Nut
42	MA-00502110083	4		Clamp
43	MA-F3010108001	4		Nut
	MA-19672942000	2		Lamp, Signal Includes 45-51
45		1		Body Ass'y.
46	MA-10356281200	2	S	Bulb
47	MA-19672942200	4		Lens
49	MA-04322104025	12		Screw
50	MA-A3030112003	2		Nut
51	MA-03700112000	2		Washer, Tooth
52	MA-19672943000	2		Lead, Wire
54	MA-19672947AG0	1		Cover
55	MA-H1540108020	1		Bolt
	725-3240	1	S	Battery 410 CCA (Not Shown)

www.mymowerparts.com

For Discount Cub Cadet Parts Call 606-678-9623 or 606-561-4983

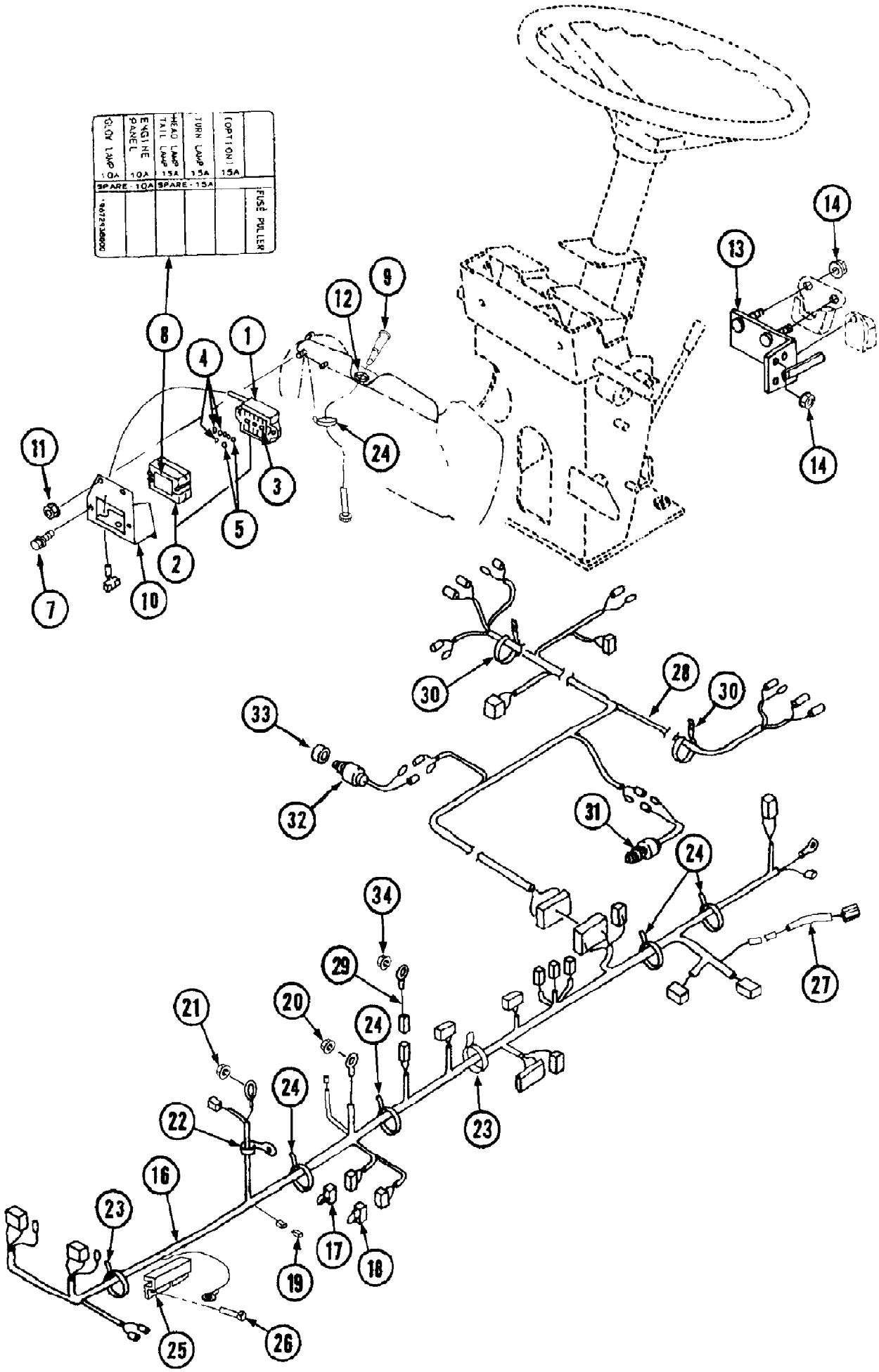

www.mymowerparts.com

For Discount Cub Cadet Parts Call 606-678-9623 or 606-561-4983

Ref #	Part Number	Qty	S/P/F	Description
	MA-19672937001	1		Fuse Box Includes items 1-5
1		1		Body Assy.
2	MA-35320901200	1		Cover
3	MA-35320901300	1		Fuse Puller
4	MA-09801001005	3		Fuse
5	MA-09801001505	4		Fuse
7	MA-H1440106016	2	/P	Bolt
8	MA-19672938000	1		Mark Fuse
9	MA-10253514000	1		Cable, Flexible
10	MA-19682938BC0	1		Bracket
11	MA-F3000106000	3		Nut
12	MA-00401002501	1		Grommet
13	MA-19672941AG0	1		Bracket
14	MA-F3000106000	4		Nut
	MA-19672946001	1	/P/F	Harness E Assy. Includes items 16-19
	MA-19672946002	1	F	Harness E Assy.
16		1		Harness
17	MA-10375502200	1		Fuse, 60 Amp
18	MA-10375581200	1		Fuse, 50 Amp
19	MA-35450866200	1		Diode
20	MA-F3010108000	1		Nut
21	MA-F3000106000	1		Nut
22	MA-00502108063	1		Clamp
23	MA-00511032070	2		Band Wire
24	MA-00511070070	5		Band Wire
25	MA-19672947AG0	1		Cover
26	MA-H1540108020	1		Bolt
27	MA-19672949000	1		Wire Lead Used with MA-19672946002 Harness on higher Serial No. tractors.
28	MA-19672948000	1		Harness B
29	MA-19632945000	1		Harness M
30	MA-00511032070	2		Band Wire
31	MA-10253505001	1	/P	Switch, Safety
32	MA-10253505001	1	/P	Switch
33	MA-19672921000	1		Collar
34	MA-F3010108001	1		Nut

www.mymowerparts.com

For Discount Cub Cadet Parts Call 606-678-9623 or 606-561-4983

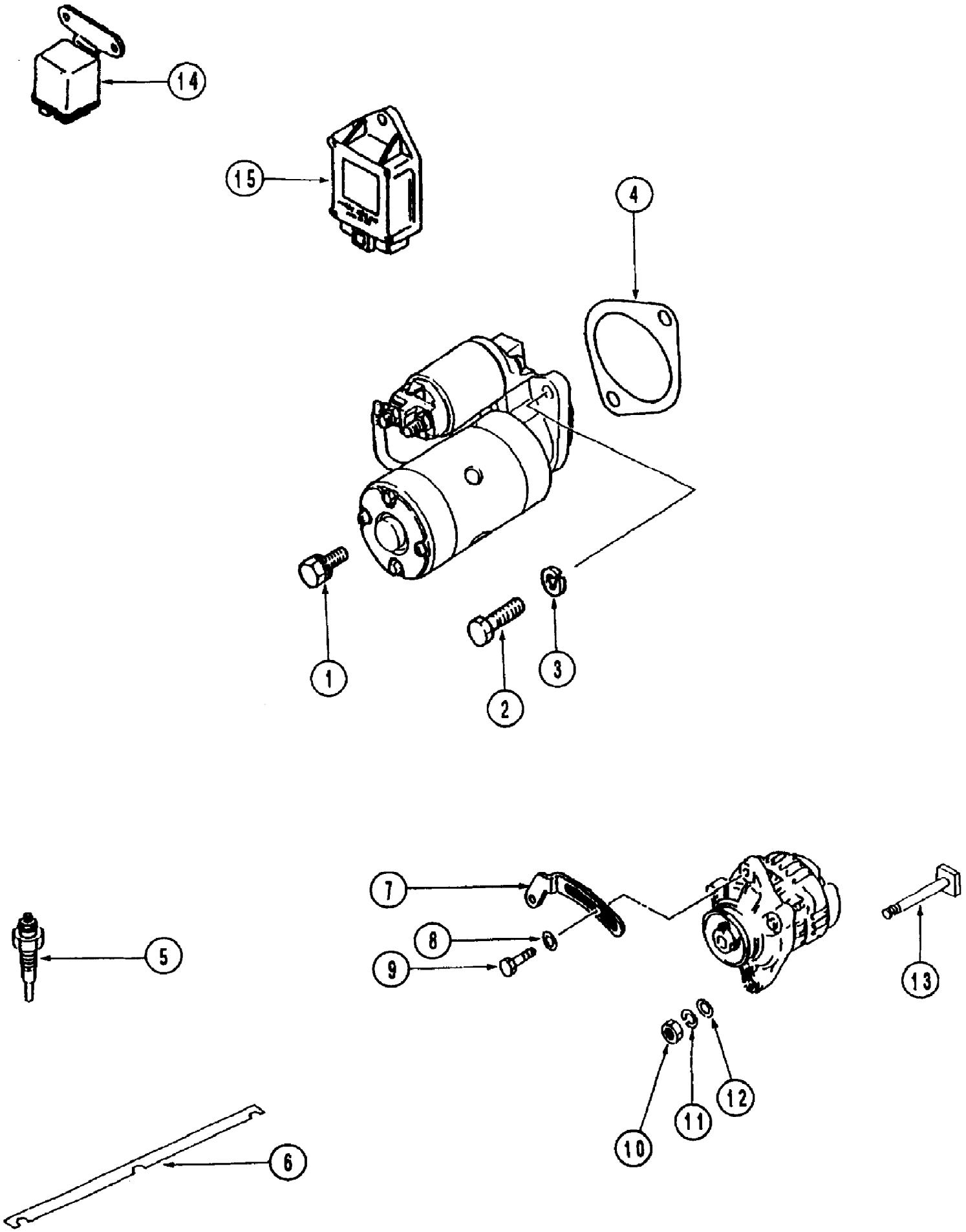

www.mymowerparts.com

For Discount Cub Cadet Parts Call 606-678-9623 or 606-561-4983

Ref #	Part Number	Qty	S/P/F	Description
1	MA-F1550110025	1		Bolt, W/Washer
2	MA-MM409427	1		Bolt, Starter
3	MA-MF450406	1	S	Spring, Washer
4	MA-30A66-00100	1	/P	Gasket, Starter
5	MA-31A66-03200	3	S	Plug, Glow
6	MA-31B66-04100	1		Plate, Connection
7	MA-31A68-02100	1		Plate, Adjusting
8	MA-MD001521	1		Washer
9	MA-MF140026	1		Bolt, Flange
10	MA-A3030110002	1		Nut
11	MA-MF450406	1	S	Spring, Washer
12	MA-03500141022	1		Washer, Plain
13	MA-31A68-20300	1		Bolt, Alternator
14	MA-MM43128201	1		Relay, Glow
15	MA-31A66-05100	1	S	Controller, Glow

www.mymowerparts.com

For Discount Cub Cadet Parts Call 606-678-9623 or 606-561-4983

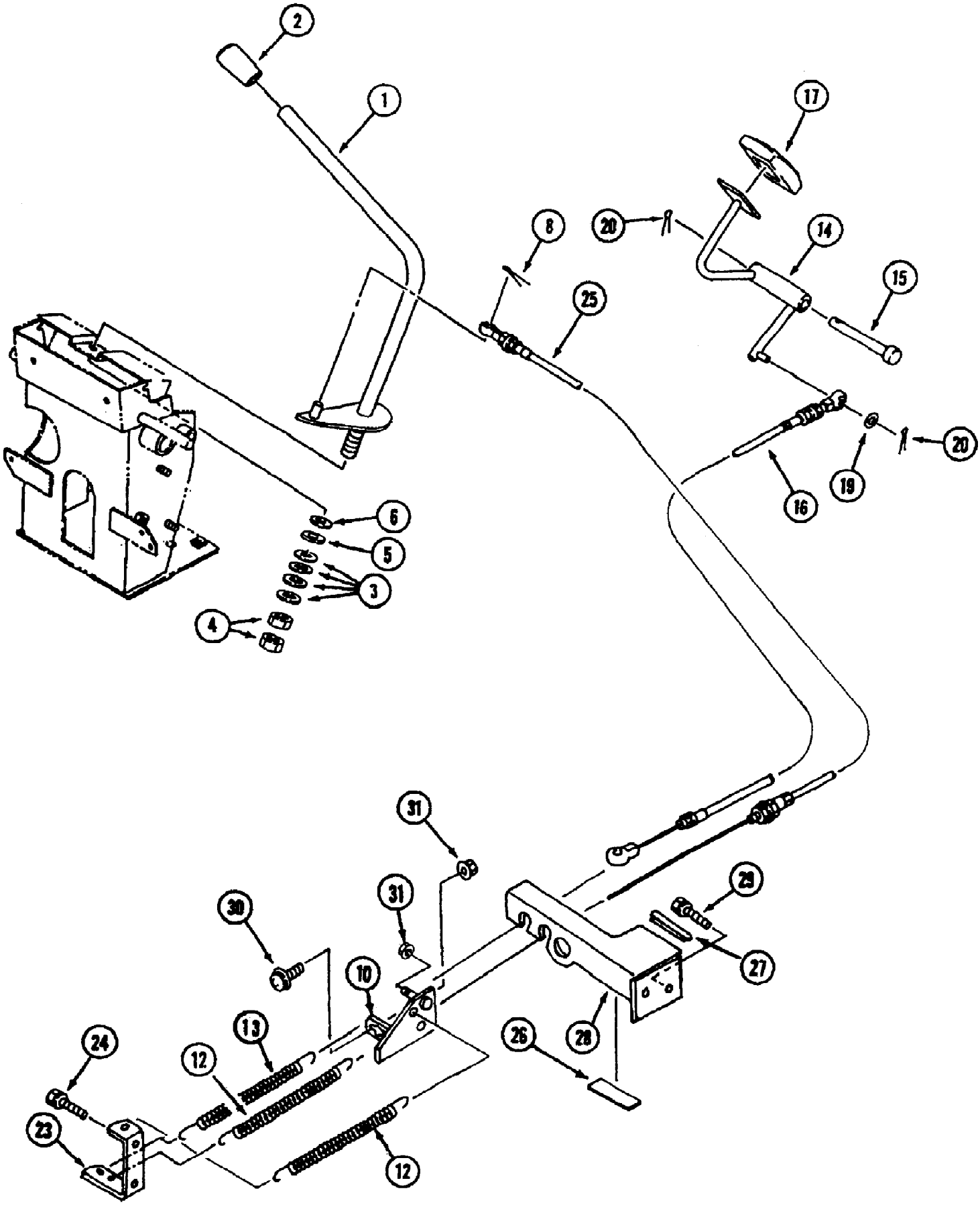

www.mymowerparts.com

For Discount Cub Cadet Parts Call 606-678-9623 or 606-561-4983

Ref #	Part Number	Qty	S/P/F	Description
1	MA-19680211AG0	1		Lever, Accelerator
2	MA-06910012258	1		Grip
3	MA-36105725100	4		Spring
4	MA-A3030112002	2		Nut
5	MA-19680212000	1		Lining, Brake
6	MA-31212559000	1	S	Liner
8	MA-05200125016	1	S	Pin Split
10	MA-19670211000	1		Plate
12	MA-35236834000	2		Spring
13	MA-35013176000	1		Spring (Gear Only)
14	MA-19630221000	1		Pedal, Accelerator (Gear Only)
15	MA-27904116000	1		Pin (Gear Only)
16	MA-19670219000	1		Wire, Accelerator F (Gear Only)
17	MA-10320228000	1		Cover Pedal (Gear Only)
19	MA-03500130613	1		Washer (Gear Only)
20	MA-05200125016	2	S	Pin Split (Gear Only)
23	MA-19670215000	1		Plate
24	MA-F1440106016	2		Bolt
25	MA-19670217000	1		Wire, Accelerator H
26	MA-35183318000	1		Rubber
27	MA-35404766000	1		Rubber
28	MA-19670213000	1		Bracket
29	MA-F1540108016	2		Bolt
30	MA-A2520706012	1		Screw
31	MA-F3000106000	2		Nut

www.mymowerparts.com

For Discount Cub Cadet Parts Call 606-678-9623 or 606-561-4983

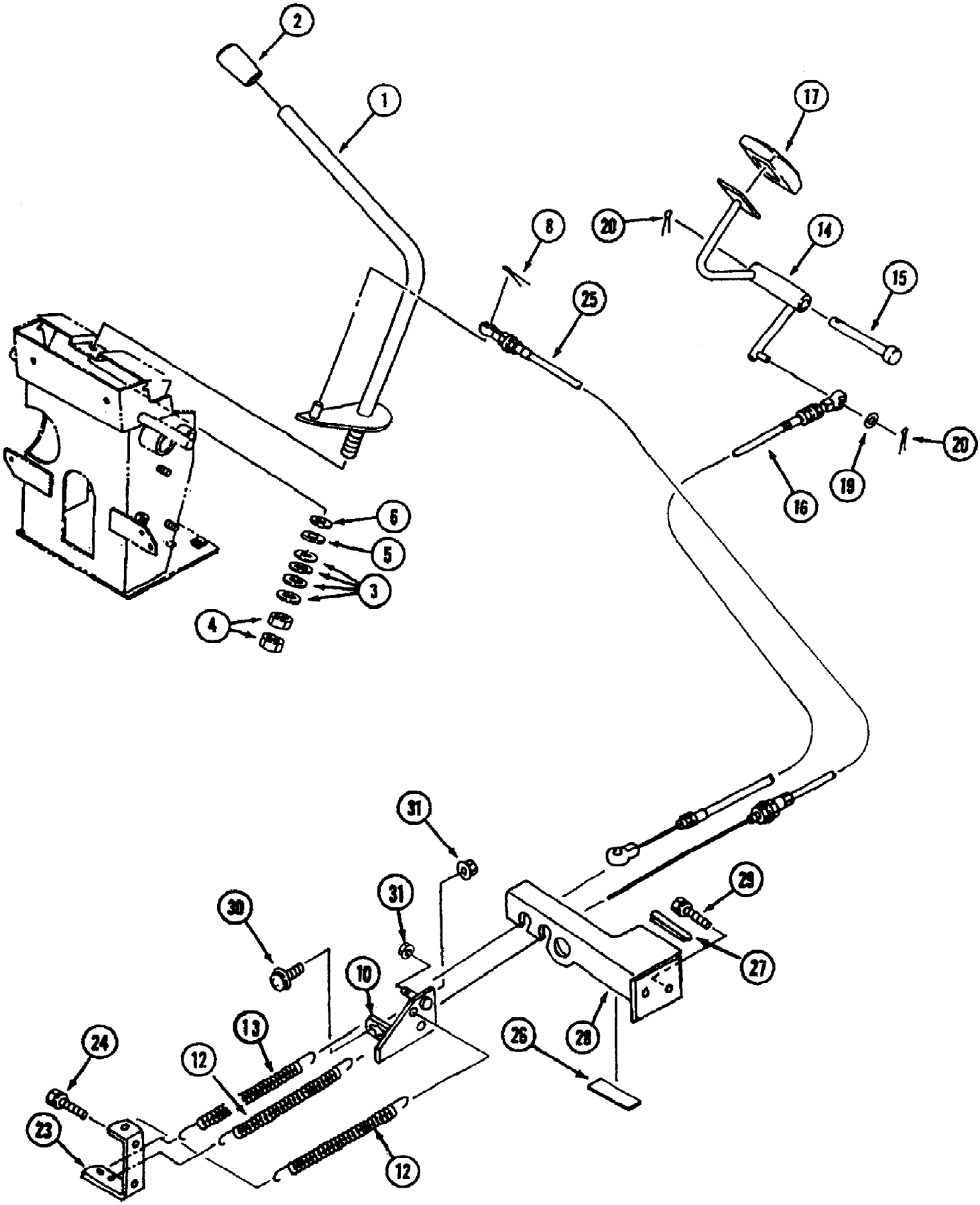

www.mymowerparts.com

For Discount Cub Cadet Parts Call 606-678-9623 or 606-561-4983

Ref #	Part Number	Qty	S/P/F	Description
1	MA-19680211AG0	1		Lever, Accelerator
2	MA-06910012528	1		Grip
3	MA-36105725100	4		Spring
4	MA-A3030112002	2		Nut
5	MA-19680212000	1		Lining, Brake
6	MA-31212559000	1	S	Liner
8	MA-05200125016	1	S	Pin Split
10	MA-19670211000	1		Plate
12	MA-35236834000	2		Spring
13		1		Spring (Gear Only) Not used on this product
14		1		Pedal, Accelerator (Gear Only) Not used on this product
15		1		Pin (Gear Only) Not used on this product
16		1		Wire, Accelerator F (Gear Only) Not used on this product
17		1		Cover Pedal (Gear Only) Not used on this product
19		1		Washer (Gear Only) Not used on this product
20		1		Pin Split (Gear Only) Not used on this product
23	MA-19670215000	1		Plate
24	MA-F1440106016	2		Bolt
25	MA-19670217000	1		Wire, Accelerator H
26	MA-35183318000	1		Rubber
27	MA-35404766000	1		Rubber
28	MA-19670213000	1		Bracket
29	MA-F1540108016	2		Bolt
30	MA-A2520706012	1		Screw
31	MA-F3000106000	2		Nut

www.mymowerparts.com

For Discount Cub Cadet Parts Call 606-678-9623 or 606-561-4983

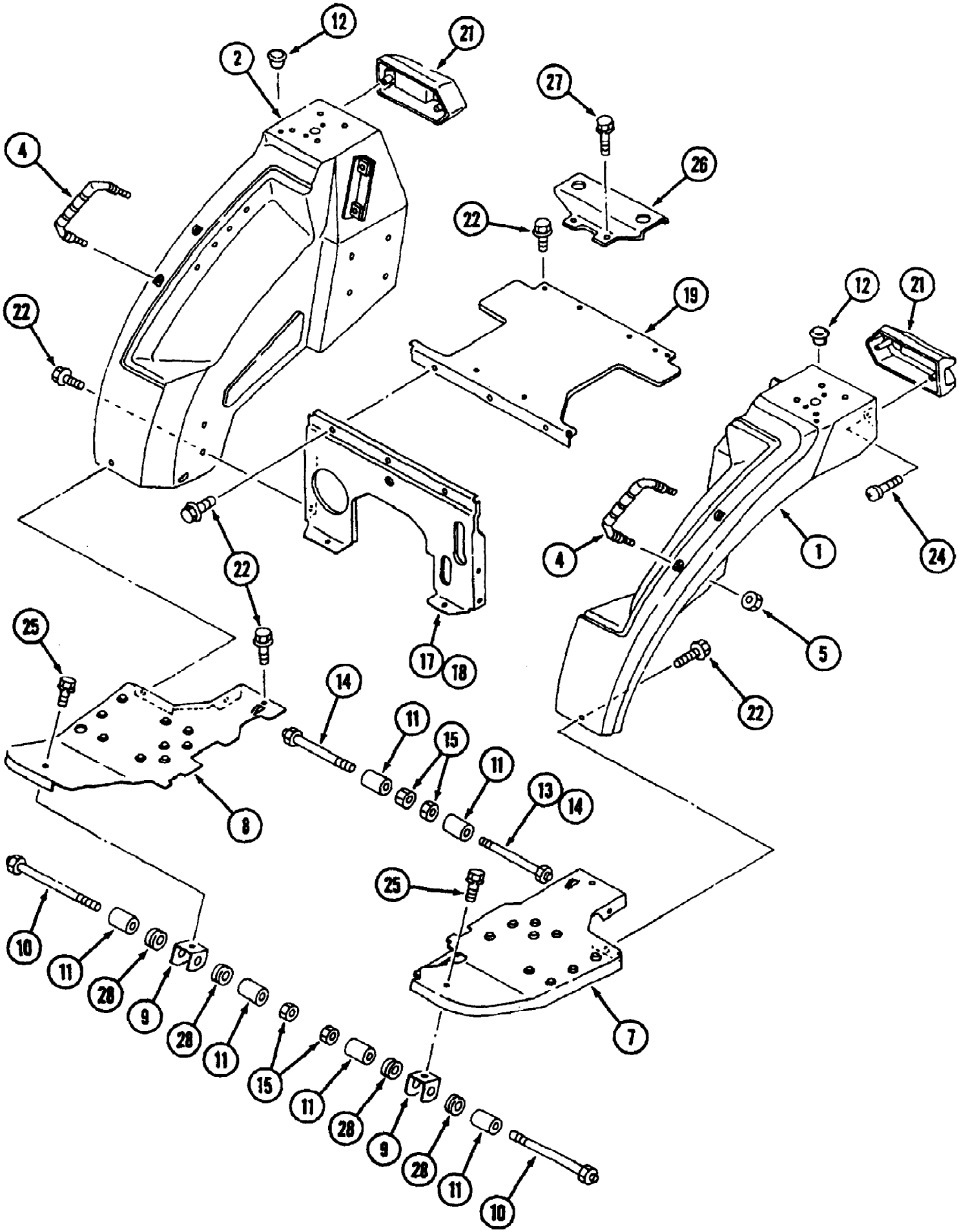

www.mymowerparts.com

For Discount Cub Cadet Parts Call 606-678-9623 or 606-561-4983

Ref #	Part Number	Qty	S/P/F	Description
1	MA-19633502BD0	1	/P	Fender, LH
2	MA-19633504BD0	1	/P	Fender, RH
4	MA-19633511000	2		Rail, Hand
5	MA-F3010108001	4		Nut
7	MA-19633521BD0	1	/P	Step, LH
8	MA-19633523BD0	1	/P	Step, RH
9	MA-19633525000	2		Bracket
10	MA-19633529000	2		Bolt
11	MA-19633531000	6		Rubber
12	MA-19082961000	2		Plug
13	MA-19633530000	1		Bolt
14	MA-19633528000	1		Bolt
15	MA-A3030116002	4		Nut
17		1		Cover, Front (not used on this product)
18	MA-19633535BD0	1	/P	Cover, Front
19	MA-19633537BD0	1	/P	Cover, Upper
21	MA-19673541000	2		Cover
22	MA-H1540108016	14		Bolt
24	MA-04322104012	4		Screw
25	MA-F1540108012	2		Bolt
26	MA-19633543AG0	1		Bracket
27	MA-F1550112030	4	/P	Bolt (Used with MA-19632401AG0 hydraulic case)
27	MA-F1540112030	4		Bolt (Used with MA-19632401AG1 hydraulic case)
28	MA-43750822000	4		Grommet

www.mymowerparts.com

For Discount Cub Cadet Parts Call 606-678-9623 or 606-561-4983

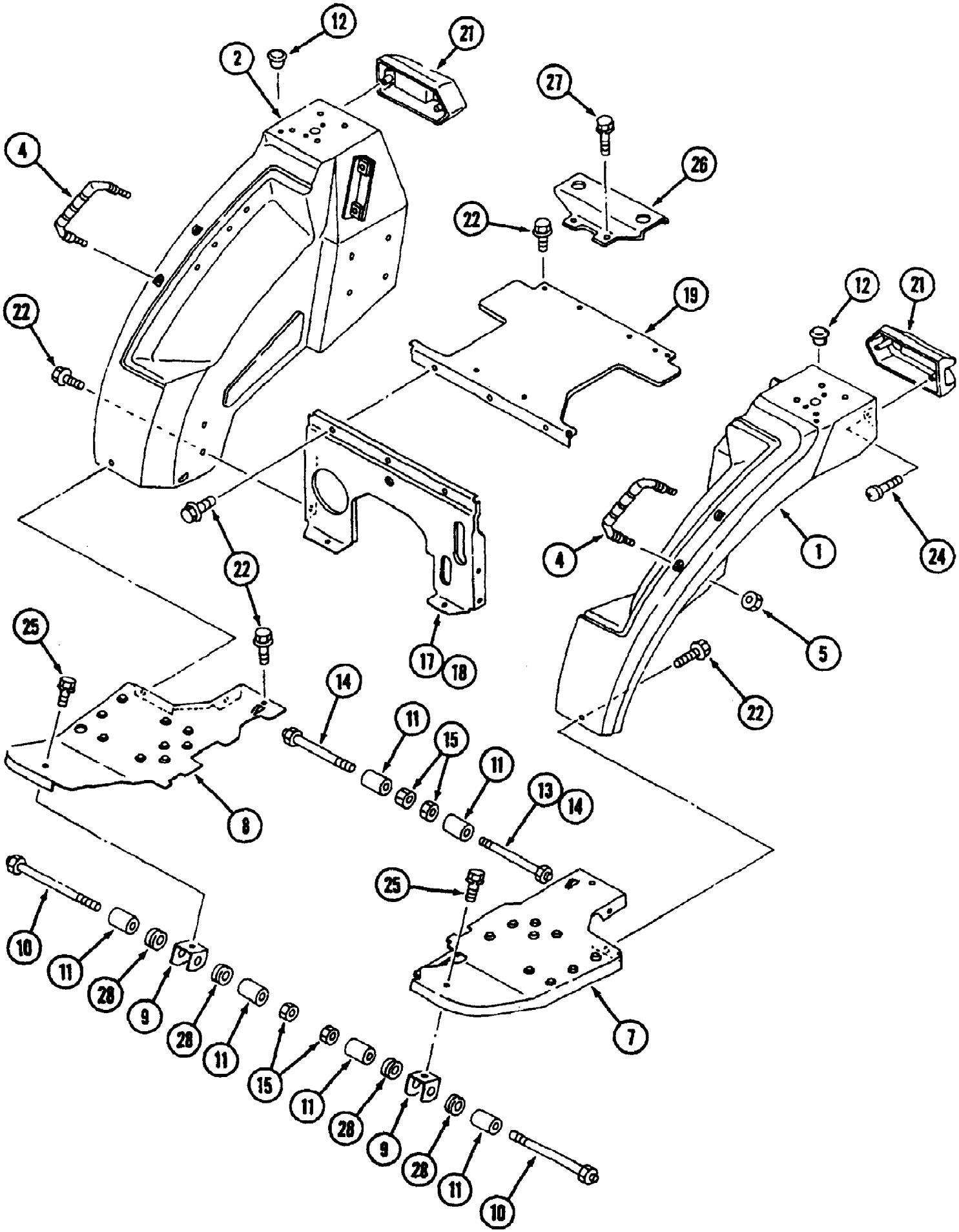

www.mymowerparts.com

For Discount Cub Cadet Parts Call 606-678-9623 or 606-561-4983

Ref #	Part Number	Qty	S/P/F	Description
1	MA-19633502BD0	1	/P	Fender, L.H.
2	MA-19633504BD0	1	/P	Fender, R.H.
4	MA-19633511000	2		Rail, Hand
5	MA-F3010108001	4		Nut
7	MA-19633521BD0	1	/P	Step, L.H.
8	MA-19633523BD0	1	/P	Step, R.H.
9	MA-19633525000	2		Bracket
10	MA-19633529000	2		Bolt
11	MA-19633531000	6		Rubber
12	MA-19082961000	2		Plug
13		1		Bolt Not used on this product
14	MA-19633528000	2		Bolt
15	MA-A3030116002	4		Nut
17	MA-19633533BD0	1	/P	Cover, Front
18		1		Cover, Front Not used on this product
19	MA-19633537BD0	1	/P	Cover, Upper
21	MA-19673541000	2		Cover
22	MA-H1540108016	14		Bolt
24	MA-04322105012	4		Screw
25	MA-F1540108012	2		Bolt
26	MA-19633543AG0	1		Bracket
27	MA-F1550112030	4	/P	Bolt
28	MA-43750822000	4		Grommet

www.mymowerparts.com

For Discount Cub Cadet Parts Call 606-678-9623 or 606-561-4983

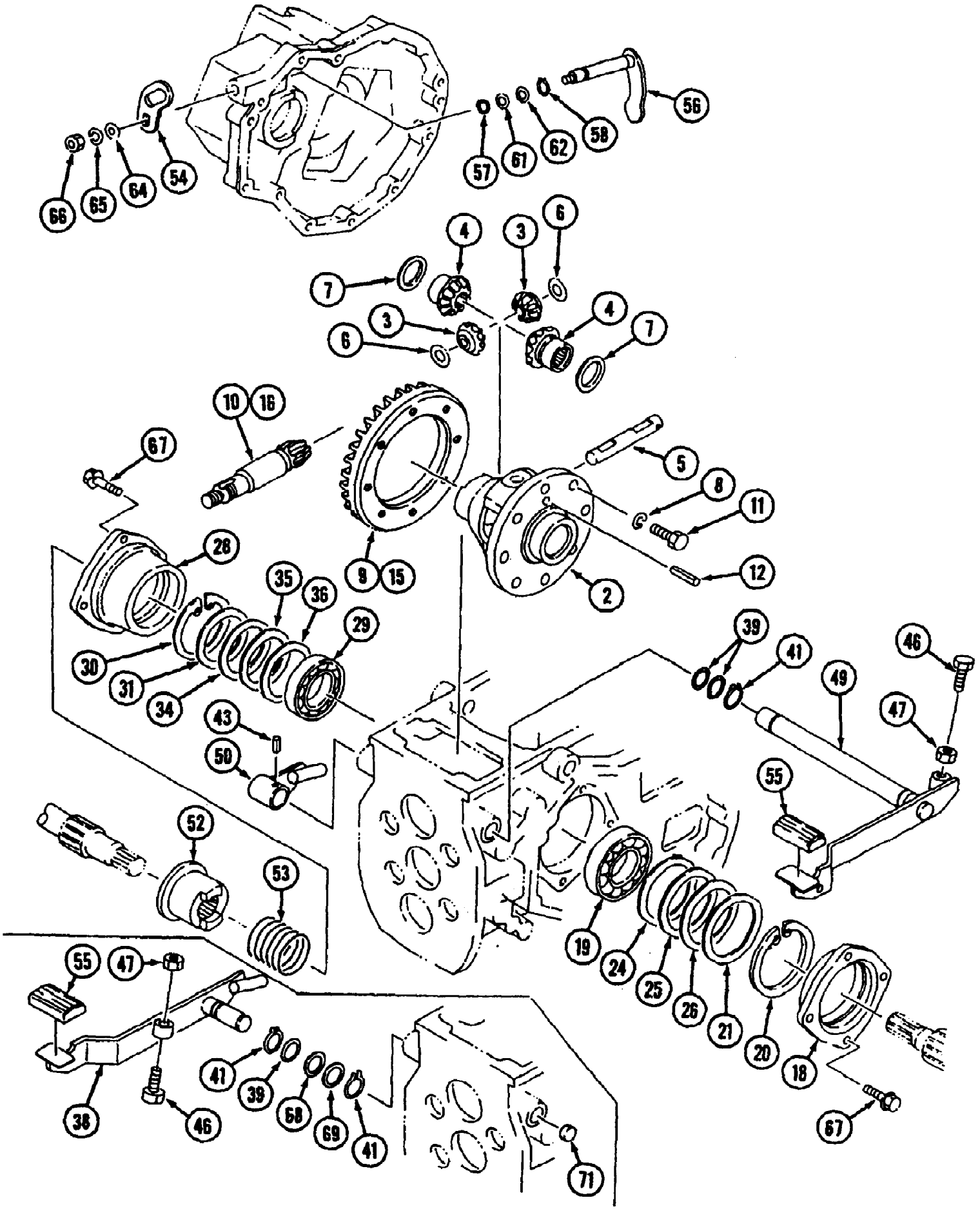

www.mymowerparts.com

For Discount Cub Cadet Parts Call 606-678-9623 or 606-561-4983

Ref #	Part Number	Qty	S/P/F	Description
	MA-19631421000	1	F	Diff.Case Ass'y. (2WD) Includes 2-12
	MA-19631421001	1	F	Diff.Case Ass'y. (2WD)
		1		Diff. Case Ass'y. (MFD) Includes 2-8, 11-16; Not used on this product; 7000 S/N 20865 & Lower, 7200 S/N 21036 & Lower, 7205 S/N 21277 & Lower
		1		Diff. Case Ass'y. (MFD) Not used on this product; 7000 S/N 20866 & Higher, 7200 S/N 21037 & Higher, 7205 S/N 21278 & Higher
2	MA-10191411000	1	F	Case Differential
	MA-10381404000	1	F	Case Differential
3	MA-10191412000	2		Pinion, Mate
4	MA-10191413000	2		Gear, Side
5	MA-10191414000	1		Shaft, Pinion
6	MA-10191415000	2		Washer, Thrust
7	MA-10191416000	2		Washer, Thrust
8	MA-A3600100802	8	F	Washer
9	MA-19631423000	1	F	Pinion & Ring Gear Set (2WD) Includes 10
10	MA-19631423001	1	F	Pinion & Ring Gear Set (2WD)
11	MA-10302103000	8	F	Bolt, M8-1.25
	MA-12186568000	8	F	Bolt, M10-1.25
12	MA-05500006040	1		Pin, Spring
		1		Pinion & Ring Gear Set (MFD) Not used on this product
		1		Pinion & Ring Gear Set (MFD) Not used on this product1
15		1		UNKNOWN
16		1		UNKNOWN
18	MA-19631406000	1	F	Holder, L.H.
	MA-19631406001	1	F	Holder, L.H.
19	MA-07500062100	1		Bearing
20	MA-07410009001	1		Ring
21	MA-10251531000	1		Liner
	MA-19631416000	1		Liner, Set Includes 24-26
24	MA-69542-60700	AR		Liner t=0.07
25	MA-69542-60800	AR		Liner t=0.2
26	MA-69542-60900	AR		Liner t=0.4
28	MA-19631407000	1		Holder, R.H.
29	MA-07500060100	1		Bearing
30	MA-07410008001	1		Ring
31	MA-10251535000	1		Liner
	MA-10190623000	1		Shim Set Includes 34-36
34	MA-10070618000	AR		Liner t=0.1
35	MA-10070618100	AR		Liner t=0.2
36	MA-10070618200	AR		Liner t=0.4
38	MA-19631408AG0	1		Pedal Diff. Lock (Gear)
39	MA-08300100160	1	/P	O-Ring
41	MA-07400002000	2		Ring
43		1		Pin, Spring (HST) Not used on this product
46	MA-A0500110035	1		Bolt
47	MA-A3010110002	1		Nut

www.mymowerparts.com

For Discount Cub Cadet Parts Call 606-678-9623 or 606-561-4983

Ref #	Part Number	Qty	S/P/F	Description
49		1		Pedal Diff. Lock (HST) Not used on this product
50		1		Arm, Diff. Lock (HST) Not used on this product
52	MA-10261415000	1		Sleeve
53	MA-11351416000	1		Spring
54	MA-19631414AG0	1		Arm
55	MA-10320228000	1		Cover, Pedal
56	MA-19631415000	1		Shifter
57	MA-08300100110	1		O-Ring
58	MA-07420001200	1	/P	Ring
	MA-10191806000	1		Shim Set Includes 61, 62
61	MA-07310001504	AR		Liner t=0.4
62	MA-07310001512	AR		Liner t=0.2
64	MA-03500150822	1		Washer
65	MA-A3600100802	1		Washer
66	MA-A3010108002	1		Nut
67	MA-F1550110025	8		Bolt
	MA-19631417000	1		Liner Set (Gear) Includes 68, 69
68	MA-07310002004	AR		Liner t=0.4 (Gear)
69	MA-07310002010	AR		Liner t=1.0 (Gear)
71	MA-08340020070	1		Seal, Cap (Gear)

www.mymowerparts.com

For Discount Cub Cadet Parts Call 606-678-9623 or 606-561-4983

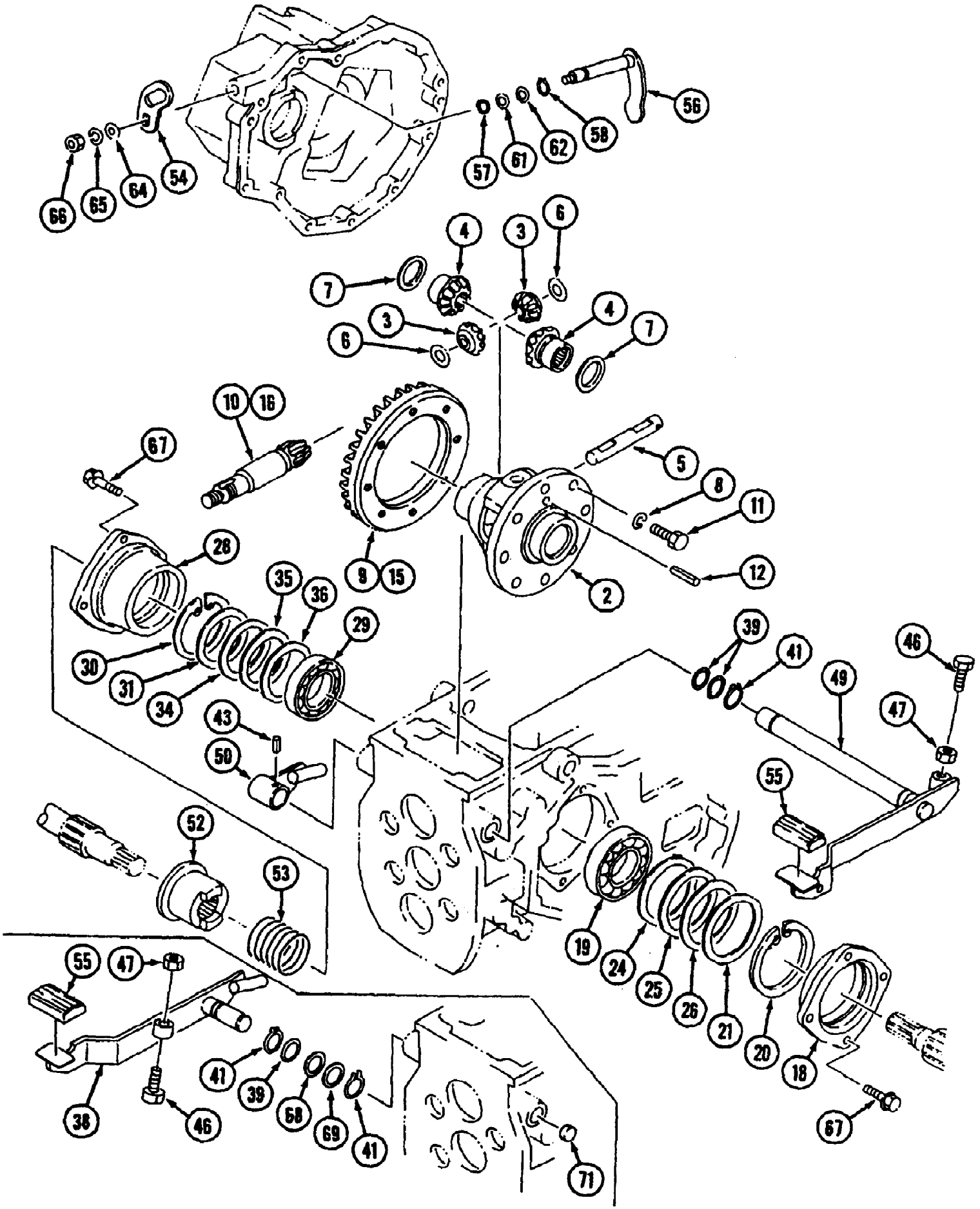

www.mymowerparts.com

For Discount Cub Cadet Parts Call 606-678-9623 or 606-561-4983

Ref #	Part Number	Qty	S/P/F	Description
	MA-19631421000	1	F	Diff.Case Ass'y. (2WD) Includes 2-12
	MA-19631421001	1	F	Diff.Case Ass'y. (2WD)
		1		Diff. Case Ass'y. (MFD) Includes 2-8, 11-16; Not used on this product; 7000 S/N 20865 & Lower, 7200 S/N 21036 & Lower, 7205 S/N 21277 & Lower
		1		Diff. Case Ass'y. (MFD) Not used on this product; 7000 S/N 20866 & Higher, 7200 S/N 21037 & Higher, 7205 S/N 21278 & Higher
2	MA-10191411000	1	F	Case Differential
	MA-10381404000	1	F	Case Differential
3	MA-10191412000	2		Pinion, Mate
4	MA-10191413000	2		Gear, Side
5	MA-10191414000	1		Shaft, Pinion
6	MA-10191415000	2		Washer, Thrust
7	MA-10191416000	2		Washer, Thrust
8	MA-A3600100802	8	F	Washer
9	MA-19631423000	1	F	Pinion & Ring Gear Set (2WD) Includes 10
10	MA-19631423001	1	F	Pinion & Ring Gear Set (2WD)
11	MA-10302103000	8	F	Bolt, M8-1.25
	MA-12186568000	8	F	Bolt, M10-1.25
12	MA-05500006040	1		Pin, Spring
		1		Pinion & Ring Gear Set (MFD) Not used on this product
		1		Pinion & Ring Gear Set (MFD) Not used on this product1
15		1		UNKNOWN
16		1		UNKNOWN
18	MA-19631406000	1	F	Holder, L.H.
	MA-19631406001	1	F	Holder, L.H.
19	MA-07500062100	1		Bearing
20	MA-07410009001	1		Ring
21	MA-10251531000	1		Liner
	MA-19631416000	1		Liner, Set Includes 24-26
24	MA-69542-60700	AR		Liner t=0.07
25	MA-69542-60800	AR		Liner t=0.2
26	MA-69542-60900	AR		Liner t=0.4
28	MA-19631407000	1		Holder, R.H.
29	MA-07500060100	1		Bearing
30	MA-07410008001	1		Ring
31	MA-10251535000	1		Liner
	MA-10190623000	1		Shim Set Includes 34-36
34	MA-10070618000	AR		Liner t=0.1
35	MA-10070618100	AR		Liner t=0.2
36	MA-10070618200	AR		Liner t=0.4
38		1		Pedal Diff. Lock (Gear) Not used on this product
39	MA-08300100160	2	/P	O-Ring
41	MA-07400002000	1		Ring
43	MA-05500008040	1		Pin, Spring (HST)
46	MA-A0500110035	1		Bolt

www.mymowerparts.com

For Discount Cub Cadet Parts Call 606-678-9623 or 606-561-4983

Ref #	Part Number	Qty	S/P/F	Description
47	MA-A3010110002	1		Nut
49	MA-19631412AG0	1		Pedal Diff. Lock (HST)
50	MA-19631413AG0	1		Arm, Diff. Lock (HST)
52	MA-10261415000	1		Sleeve
53	MA-11351416000	1		Spring
54	MA-19631414AG0	1		Arm
55	MA-10320228000	1		Cover, Pedal
56	MA-19631415000	1		Shifter
57	MA-08300100110	1		O-Ring
58	MA-07420001200	1	/P	Ring
	MA-10191806000	1		Shim Set Includes 61, 62
61	MA-07310001504	AR		Liner t=0.4
62	MA-07310001512	AR		Liner t=0.2
64	MA-03500150822	1		Washer
65	MA-A3600100802	1		Washer
66	MA-A3010108002	1		Nut
67	MA-F1550110025	8		Bolt
		1		Liner Set (Gear) Includes 68,69; Not used on this product
68		1		Liner t=0.4 (Gear) Not used on this product
69		1		Liner t=1.0 (Gear) Not used on this product
71		1		Seal, Cap (Gear) Not used on this product

www.mymowerparts.com

For Discount Cub Cadet Parts Call 606-678-9623 or 606-561-4983

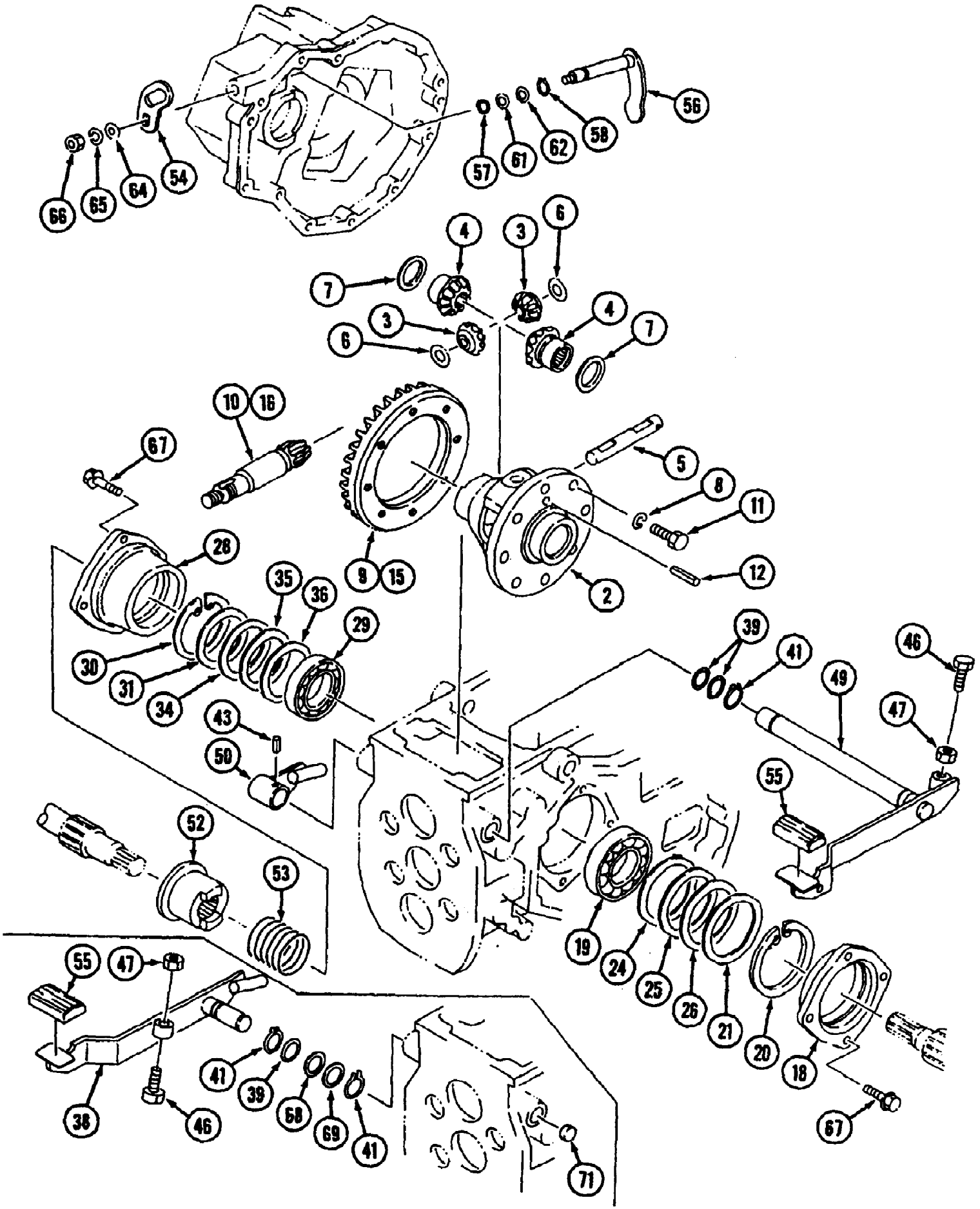

www.mymowerparts.com

For Discount Cub Cadet Parts Call 606-678-9623 or 606-561-4983

Ref #	Part Number	Qty	S/P/F	Description
		1		Diff.Case Ass'y. (2WD) Includes 2-12; Not used on this product; 7000 S/N 20865 & Lower, 7200 S/N 21036 & Lower, 7205 S/N 21277 & Lower
		1		Diff.Case Ass'y. (2WD) Not used on this product; 7000 S/N 20866 & Higher, 7200 S/N 21037 & Higher, 7205 S/N 21278 & Higher
	MA-19631401000	1	F	Diff. Case Ass'y. (MFD) Includes 2-8, 11-16
	MA-19631401001	1	F	Diff. Case Ass'y. (MFD)
2	MA-10191411000	1	F	Case Differential
	MA-10381404000	1	F	Case Differential
3	MA-10191412000	2		Pinion, Mate
4	MA-10191413000	2		Gear, Side
5	MA-10191414000	1		Shaft, Pinion
6	MA-10191415000	2		Washer, Thrust
7	MA-10191416000	2		Washer, Thrust
8	MA-A3600100802	8	F	Washer
9		1		Pinion & Ring Gear Set (2WD) Not used on this product
10		1		Pinion & Ring Gear Set (2WD) Not used on this product
11	MA-10302103000	8	F	Bolt, M8-1.25
	MA-12186568000	8	F	Bolt, M10-1.25
12	MA-05500006040	1		Pin, Spring
	MA-19631403000	1	F	Pinion & Ring Gear Set (MFD) Includes 15, 16
	MA-19631403001	1	F	Pinion & Ring Gear Set (MFD) Includes 15, 16
15		1		UNKNOWN
16		1		UNKNOWN
18	MA-19631406000	1	F	Holder, L.H.
	MA-19631406001	1	F	Holder, L.H.
19	MA-07500062100	1		Bearing
20	MA-07410009001	1		Ring
21	MA-10251531000	1		Liner
	MA-19631416000	1		Liner, Set Includes 24-26
24	MA-69542-60700	AR		Liner t=0.07
25	MA-69542-60800	AR		Liner t=0.2
26	MA-69542-60900	AR		Liner t=0.4
28	MA-19631407000	1		Holder, R.H.
29	MA-07500060100	1		Bearing
30	MA-07410008001	1		Ring
31	MA-10251535000	1		Liner
	MA-10190623000	1		Shim Set Includes 34-36
34	MA-10070618000	AR		Liner t=0.1
35	MA-10070618100	AR		Liner t=0.2
36	MA-10070618200	AR		Liner t=0.4
38	MA-19631408AG0	1		Pedal Diff. Lock (Gear)
39	MA-08300100160	1	/P	O-Ring
41	MA-07400002000	2		Ring
43		1		Pin, Spring (HST) Not used on this product
46	MA-A0500110035	1		Bolt
47	MA-A3010110002	1		Nut

www.mymowerparts.com

For Discount Cub Cadet Parts Call 606-678-9623 or 606-561-4983

Ref #	Part Number	Qty	S/P/F	Description
49		1		Pedal Diff. Lock (HST) Not used on this product
50		1		Arm, Diff. Lock (HST) Not used on this product
52	MA-10261415000	1		Sleeve
53	MA-11351416000	1		Spring
54	MA-19631414AG0	1		Arm
55	MA-10320228000	1		Cover, Pedal
56	MA-19631415000	1		Shifter
57	MA-08300100110	1		O-Ring
58	MA-07420001200	1	/P	Ring
	MA-10191806000	1		Shim Set Includes 61, 62
61	MA-07310001504	AR		Liner t=0.4
62	MA-07310001512	AR		Liner t=0.2
64	MA-03500150822	1		Washer
65	MA-A3600100802	1		Washer
66	MA-A3010108002	1		Nut
67	MA-F1550110025	8		Bolt
	MA-19631417000	1		Liner Set (Gear) Includes 68, 69
68	MA-07310002004	AR		Liner t=0.4 (Gear)
69	MA-07310002010	AR		Liner t=1.0 (Gear)
71	MA-08340020070	1		Seal, Cap (Gear)

www.mymowerparts.com

For Discount Cub Cadet Parts Call 606-678-9623 or 606-561-4983

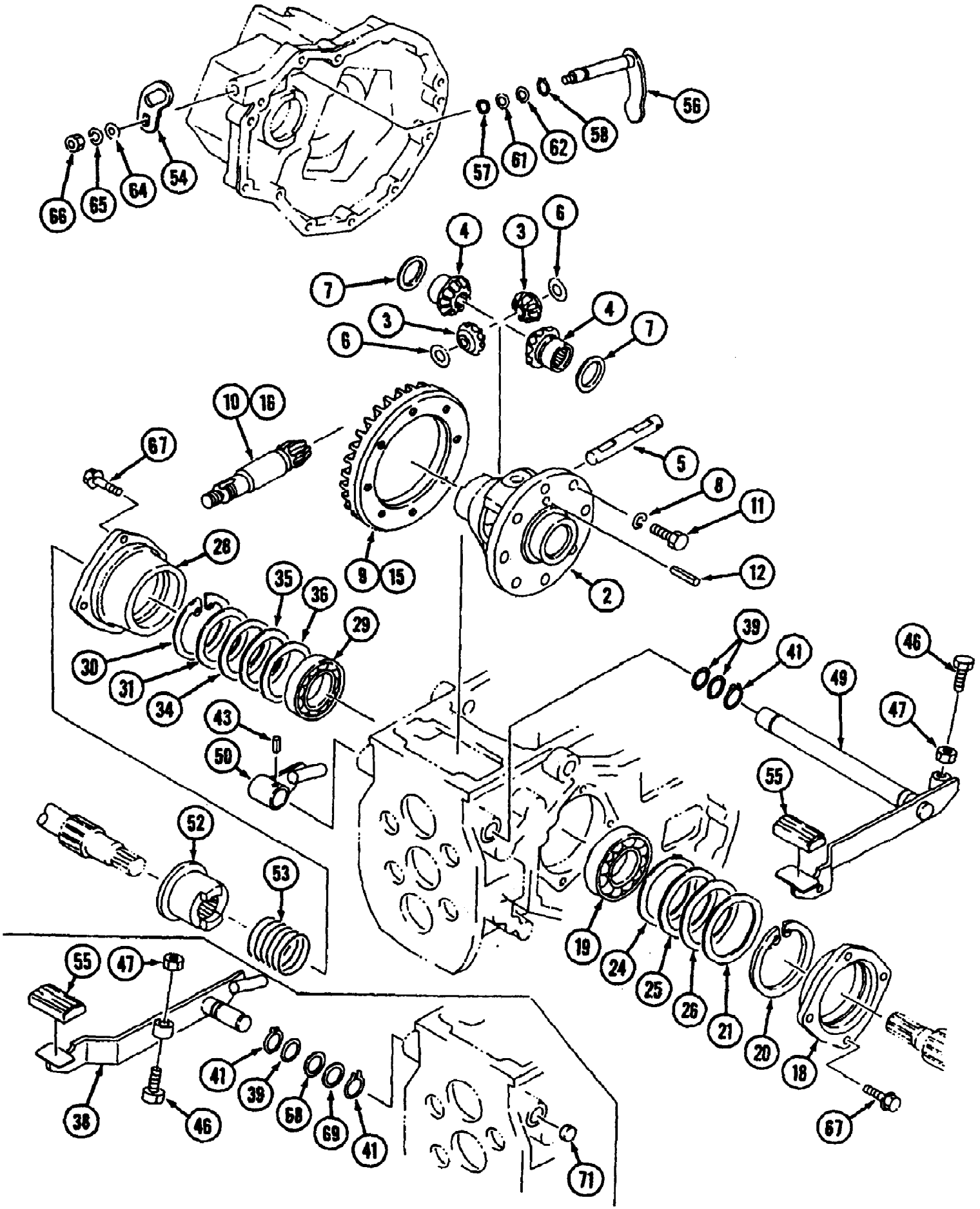

www.mymowerparts.com

For Discount Cub Cadet Parts Call 606-678-9623 or 606-561-4983

Ref #	Part Number	Qty	S/P/F	Description
		1		Diff.Case Ass'y. (2WD) Includes 2-12; Not used on this product; 7000 S/N 20865 & Lower, 7200 S/N 21036 & Lower, 7205 S/N 21277 & Lower
		1		Diff.Case Ass'y. (2WD) Not used on this product; 7000 S/N 20866 & Higher, 7200 S/N 21037 & Higher, 7205 S/N 21278 & Higher
	MA-19631401000	1	F	Diff. Case Ass'y. (MFD) Includes 2-8, 11-16
	MA-19631401001	1	F	Diff. Case Ass'y. (MFD)
2	MA-10191411000	1	F	Case Differential
	MA-10381404000	1	F	Case Differential
3	MA-10191412000	2		Pinion, Mate
4	MA-10191413000	2		Gear, Side
5	MA-10191414000	1		Shaft, Pinion
6	MA-10191415000	2		Washer, Thrust
7	MA-10191416000	2		Washer, Thrust
8	MA-A3600100802	8	F	Washer
9		1		Pinion & Ring Gear Set (2WD) Not used on this product
10		1		Pinion & Ring Gear Set (2WD) Not used on this product
11	MA-10302103000	8	F	Bolt, M8-1.25
	MA-12186568000	8	F	Bolt, M10-1.25
12	MA-05500006040	1		Pin, Spring
	MA-19631403000	1	F	Pinion & Ring Gear Set (MFD) Includes 15, 16
	MA-19631403001	1	F	Pinion & Ring Gear Set (MFD) Includes 15, 16
15		1		UNKNOWN
16		1		UNKNOWN
18	MA-19631406000	1	F	Holder, L.H.
	MA-19631406001	1	F	Holder, L.H.
19	MA-07500062100	1		Bearing
20	MA-07410009001	1		Ring
21	MA-10251531000	1		Liner
	MA-19631416000	1		Liner, Set Includes 24-26
24	MA-69542-60700	AR		Liner t=0.07
25	MA-69542-60800	AR		Liner t=0.2
26	MA-69542-60900	AR		Liner t=0.4
28	MA-19631407000	1		Holder, R.H.
29	MA-07500060100	1		Bearing
30	MA-07410008001	1		Ring
31	MA-10251535000	1		Liner
	MA-10190623000	1		Shim Set Includes 34-36
34	MA-10070618000	AR		Liner t=0.1
35	MA-10070618100	AR		Liner t=0.2
36	MA-10070618200	AR		Liner t=0.4
38		1		Pedal Diff. Lock (Gear) Not used on this product
39	MA-08300100160	2	/P	O-Ring
41	MA-07400002000	1		Ring
43	MA-05500008040	1		Pin, Spring (HST)
46	MA-A0500110035	1		Bolt

www.mymowerparts.com

For Discount Cub Cadet Parts Call 606-678-9623 or 606-561-4983

Ref #	Part Number	Qty	S/P/F	Description
47	MA-A3010110002	1		Nut
49	MA-19631412AG0	1		Pedal Diff. Lock (HST)
50	MA-19631413AG0	1		Arm, Diff. Lock (HST)
52	MA-10261415000	1		Sleeve
53	MA-11351416000	1		Spring
54	MA-19631414AG0	1		Arm
55	MA-10320228000	1		Cover, Pedal
56	MA-19631415000	1		Shifter
57	MA-08300100110	1		O-Ring
58	MA-07420001200	1	/P	Ring
	MA-10191806000	1		Shim Set Includes 61, 62
61	MA-07310001504	AR		Liner t=0.4
62	MA-07310001512	AR		Liner t=0.2
64	MA-03500150822	1		Washer
65	MA-A3600100802	1		Washer
66	MA-A3010108002	1		Nut
67	MA-F1550110025	8		Bolt
		1		Liner Set (Gear) Includes 68, 69; Not used on this product
68		1		Liner t=0.4 (Gear) Not used on this product
69		1		Liner t=1.0 (Gear) Not used on this product
71		1		Seal, Cap (Gear) Not used on this product

www.mymowerparts.com

For Discount Cub Cadet Parts Call 606-678-9623 or 606-561-4983

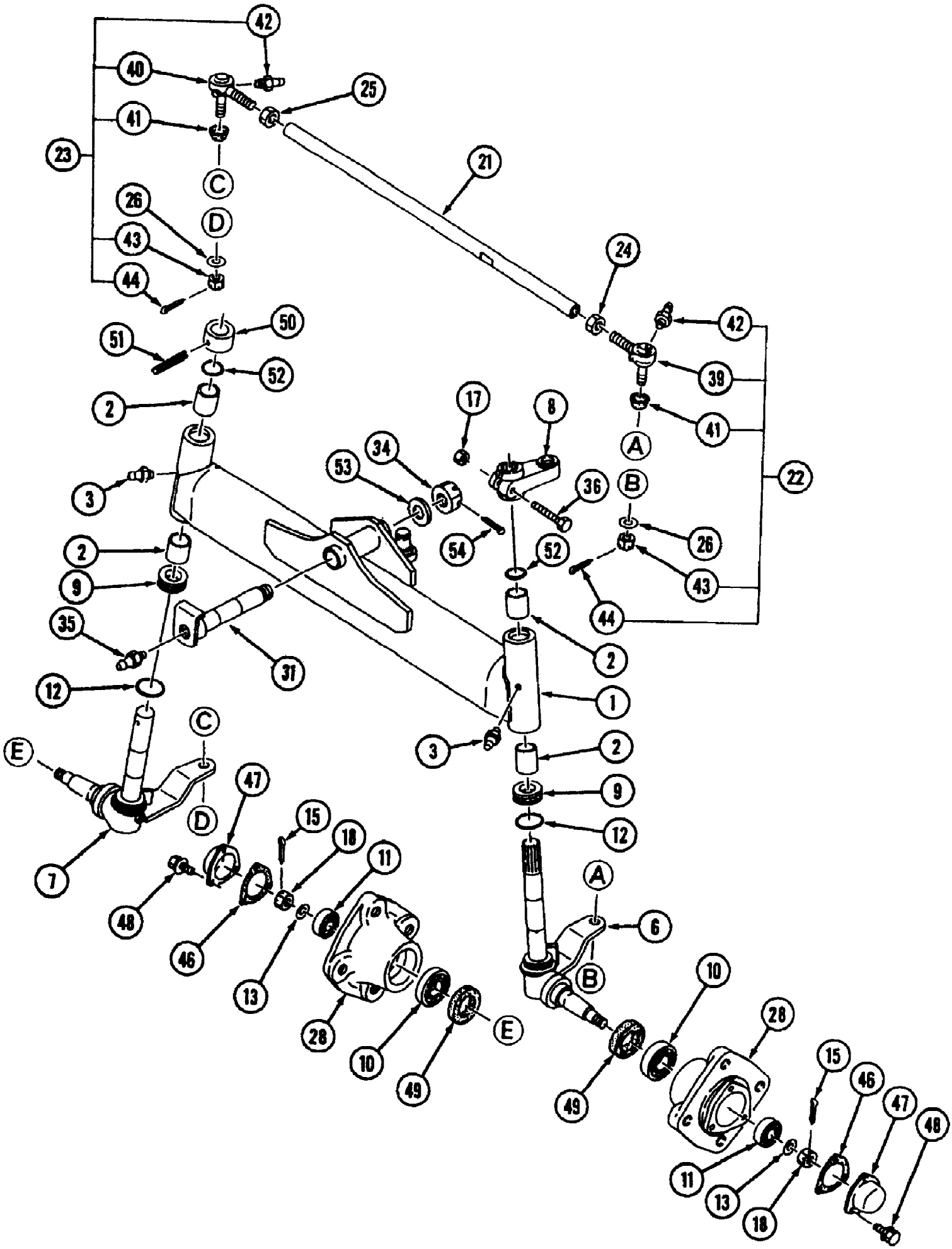

www.mymowerparts.com

For Discount Cub Cadet Parts Call 606-678-9623 or 606-561-4983

Ref #	Part Number	Qty	S/P/F	Description
	MA-19632051AG0	1		Center Ass'y. Includes 1-3
1	MA-19632053AG0	1		Center Axle
2	MA-67541-00800	4		Bushing
3	MA-A6503100300	2	/P	Nipple, Grease
6	MA-19632055AG0	1	/P	Knuckle L.H.
7	MA-19632057AG0	1		Knuckle R.H.
8	MA-19632058AG0	1		Arm, Knuckle
9	MA-05642-00400	2		Bearing
10	MA-07500062050	2		Bearing
11	MA-07500063040	2		Bearing
12	MA-08301100380	2		O-Ring
13	MA-03500051632	2	S	Washer
15	MA-05200140032	2		Pin Split
17	MA-A3030110002	1		Nut
18	MA-A3130101601	2		Nut
	MA-19632061AG0	1		Tie Rod Ass'y. Includes 21-25
21	MA-19632063AG0	1	/P	Tube
22	MA-10302157AG0	1	/P	End Ass'y - Tie Rod L.H. Side (R.H. Thread) Includes Ref. Nos. 41 thru 44
23	MA-10302158AG0	1	/P	End Ass'y - Tie Rod R.H. Side (L.H. Thread) Includes Ref. Nos. 41 thru 44
24	MA-67354-00201	1		Nut (R.H. Thread) M17
25	MA-67354-00301	1		Nut (L.H. Thread) M17
26	MA-13353166000	2		Washer
28	MA-19832042AG0	2		Hub, Front Wheel
31	MA-19632067AG0	1		Pin Center
34	MA-19632068000	1		Nut
35	MA-A6503100300	1	/P	Nipple, Grease
36	MA-F1550110055	1		Bolt
39		1		Order Ref. No. 22
40		1		Order Ref. No. 23
41	MA-67441-00916	2	S	Cover, Dust
42	MA-A6500600600	2		Nipple, Grease
43	MA-67441-00918	2		Nut
44	MA-05200130025	2		Pin, Split
46	MA-69541-06400	2		Gasket
47	MA-19832048AG0	2		Cap
48	MA-F1440106012	6		Bolt
49	MA-08401325211	2		Oil Seal
50	MA-19632069AG0	1		Boss
51	MA-05500008045	1		Pin, Spring
52	MA-08301100250	2		O-Ring
53	MA-03500172450	1		Washer
54	MA-05200150040	1		Pin, Split

www.mymowerparts.com

For Discount Cub Cadet Parts Call 606-678-9623 or 606-561-4983

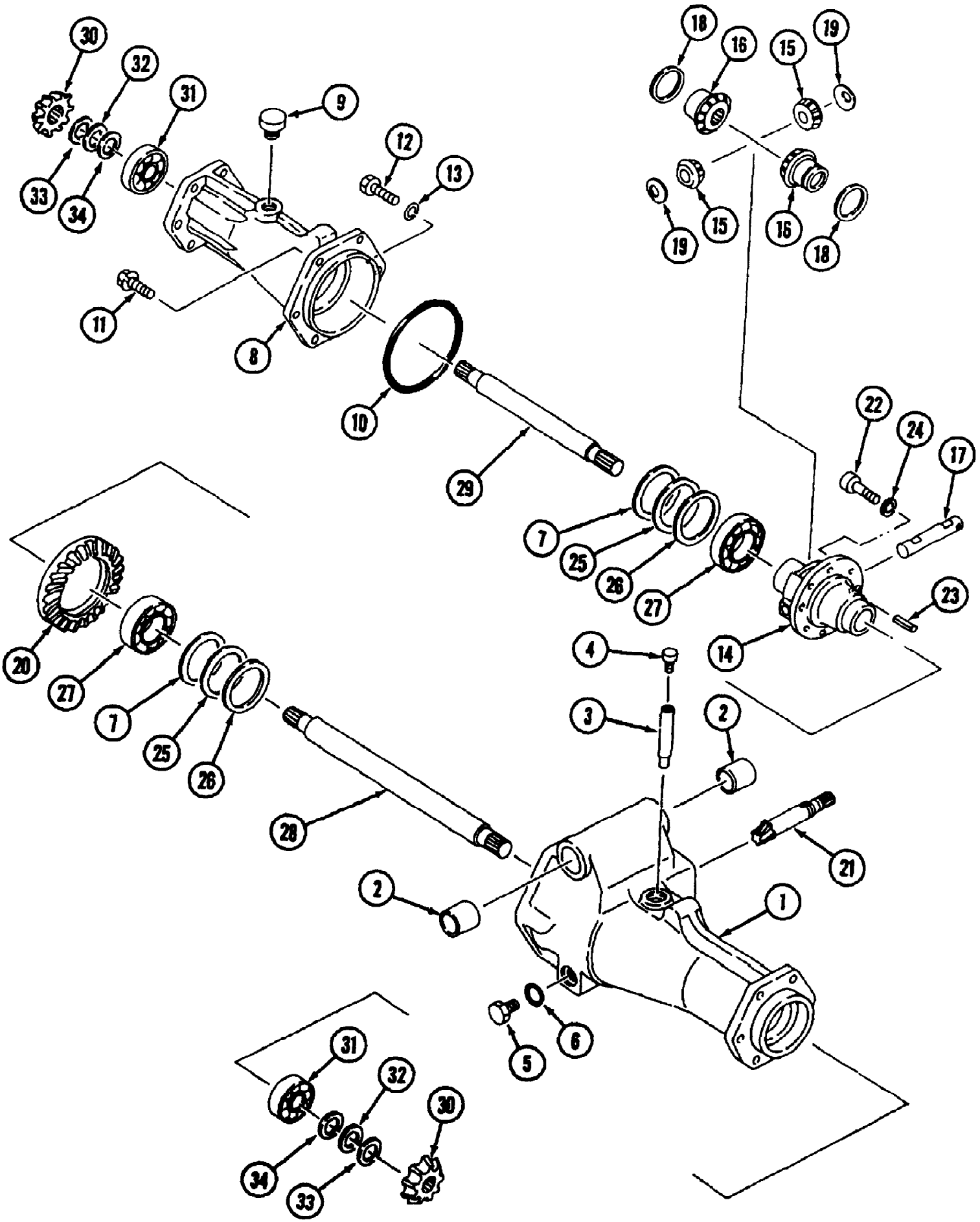

www.mymowerparts.com

For Discount Cub Cadet Parts Call 606-678-9623 or 606-561-4983

Ref #	Part Number	Qty	S/P/F	Description
	MA-19672101AG0	1		Front Axle MFD Ass'y. (Complete)
	MA-19632111AG0	1		Housing A Ass'y. Includes 1-2
1	MA-19632112AG0	1		Housing Axle A
2	MA-07961025250	2		Bushing
	MA-07963025250	2		Bushing Replaces Bushing MA-07961025250 when inventory is depleted
3	MA-10302117AG0	1		Pipe
4	MA-11190621000	1	/P	Plug, Vent
5	MA-10250808000	1		Plug
6	MA-08331001200	1		Seal, Washer
7	MA-10070618200	AR		Liner
8	MA-19632113AG0	1		Housing Axle B
9	MA-31501016000	1		Plug, Oil
10	MA-08300501200	1		O-Ring
11	MA-F1550110030	5		Bolt
12	MA-69542-64700	1		Bolt
13	MA-A3600101002	1	/P	Washer
	MA-19672114000	1		Diff. Case Ass'y. Includes 14-24
14	MA-10322115001	1		Case Diff.
15	MA-10191412000	2		Pinion Mate
16	MA-10191413000	2		Gear Side
17	MA-10191414000	1		Shaft Pinion
18	MA-10191416000	2		Washer, Thrust
19	MA-10191415000	2		Washer, Thrust
	MA-19672125000	1		6-35 Set Includes 20-21
20		1		Gear Ring Sold in set only.
21		1		Shaft Pinion Sold in set only
22	MA-A5440708016	8		Bolt
23	MA-05500006036	1		Pin, Spring
24	MA-10322120000	8		Washer
25	MA-10070618000	AR		Liner
26	MA-10070618100	AR		Liner
	MA-10190623000	1		Shim Set, Shaft Includes 7,25,26
27	MA-07500060100	2		Bearing
28	MA-19632134000	1		Shaft Diff. L.H.
29	MA-19632135000	1		Shaft Diff. R.H.
30	MA-10252138000	2		Pinion 13T
31	MA-07500063050	2		Bearing
	MA-10190626000	1		Shim Set, Pinion Includes 32-34
32	MA-11353016000	AR		Liner
33	MA-07310002502	AR		Liner
34	MA-07310002504	AR		Liner

www.mymowerparts.com

For Discount Cub Cadet Parts Call 606-678-9623 or 606-561-4983

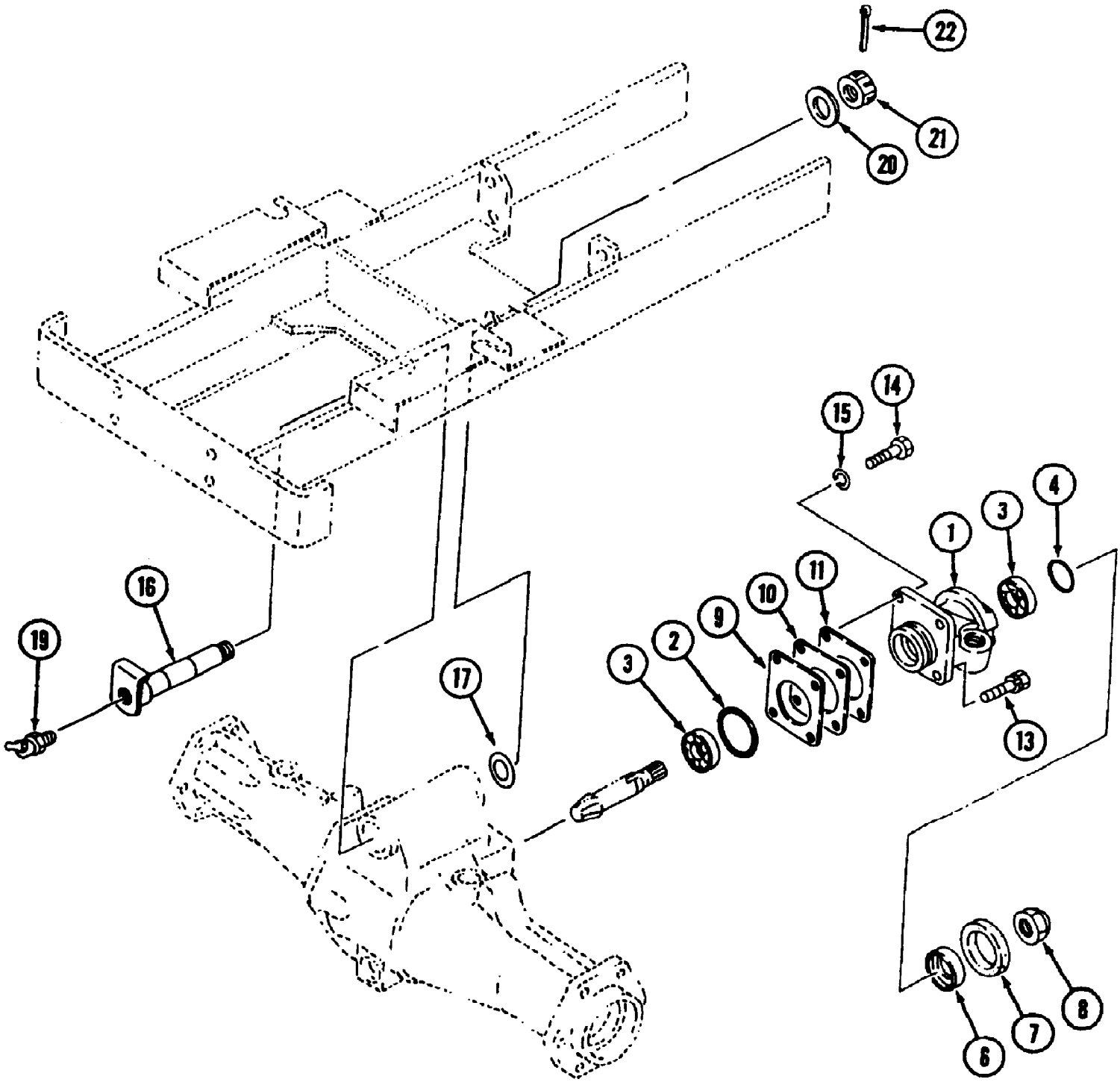

www.mymowerparts.com

For Discount Cub Cadet Parts Call 606-678-9623 or 606-561-4983

Ref #	Part Number	Qty	S/P/F	Description
1	MA-19632126AG0	1		Case, Pinion
2	MA-08300500530	1		O-Ring
3	MA-19632127000	2		Bearing
4	MA-08401030458	1		Seal, Oil
6	MA-19632128000	1		Bushing
7	MA-08300100220	1		O-Ring
8	MA-19632129000	1		Nut(M22)
	MA-19632130000	1		Shim Set Includes 9,10,11
9	MA-19632131000	AR		Shim
10	MA-19632132000	AR		Shim
11	MA-19632133000	AR		Shim
13	MA-F1550110030	3		Bolt
14	MA-69542-64700	1		Bolt
15	MA-A3600101002	1	/P	Washer
16	MA-19632067AG0	1		Pin Center
17	MA-11351304011	1	S	Liner
19	MA-A6513100300	1	S	Nipple, Grease
	MA-A6503100300	1	/P	Nipple, Grease Replaces MA-A6513100300.
20	MA-11352064000	1		Plate
21	MA-A3130102401	1		Nut
22	MA-05200150040	1		Pin, Split

www.mymowerparts.com

For Discount Cub Cadet Parts Call 606-678-9623 or 606-561-4983

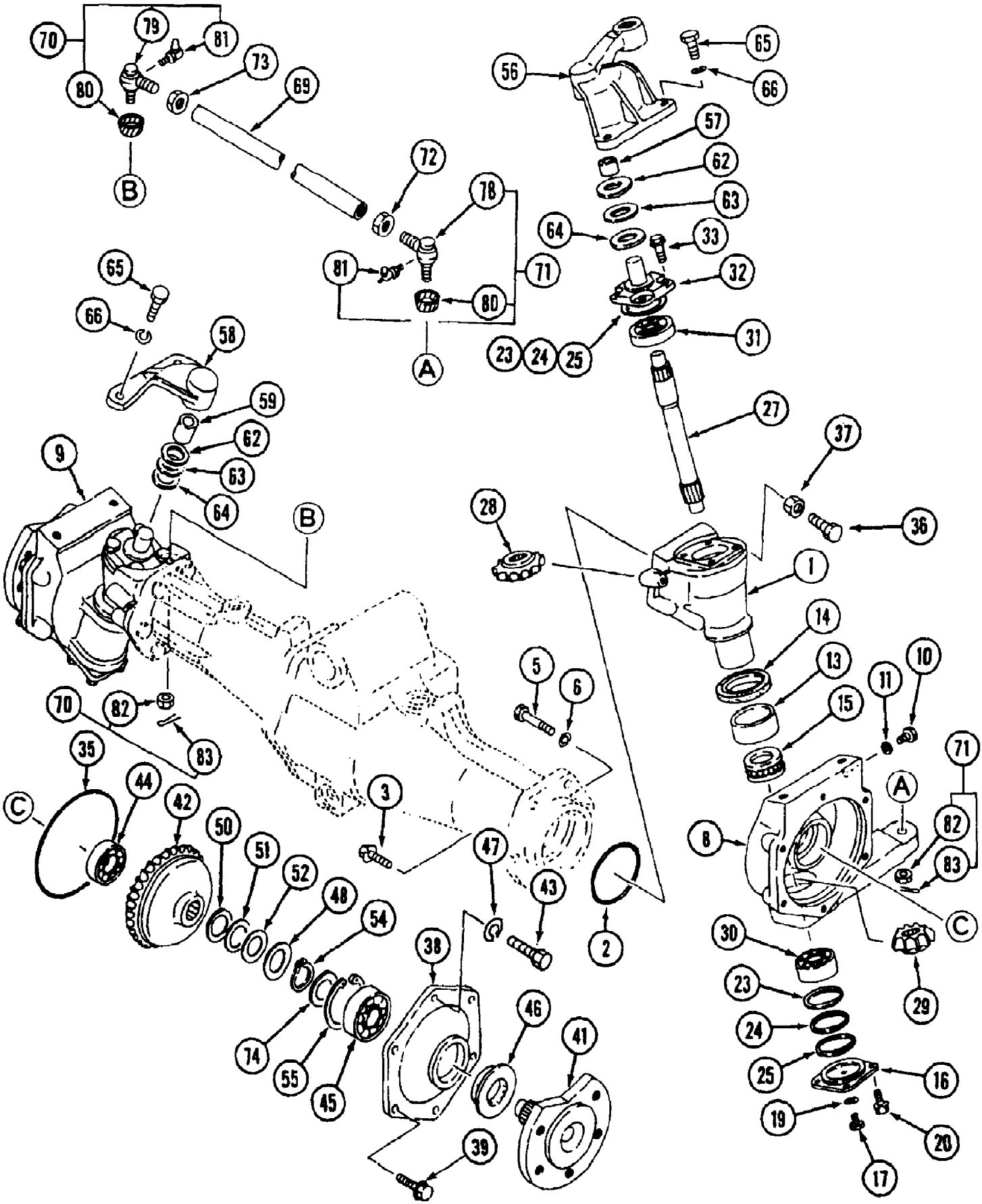

www.mymowerparts.com

For Discount Cub Cadet Parts Call 606-678-9623 or 606-561-4983

Ref #	Part Number	Qty	S/P/F	Description
1	MA-19632136AG0	2		Case, Kingpin
2	MA-08300500750	2		O-Ring
3	MA-F1550110030	10		Bolt
5	MA-69542-64700	2		Bolt
6	MA-A3600101002	2	/P	Washer
8	MA-19632137AG0	1		Case Final L.H.
9	MA-19632138AG0	1		Case Final R.H.
10	MA-27403214200	2		Plug
11	MA-08331000800	2		Seal, Washer
13	MA-07961045250	2		Bushing
14	MA-08401045629	2		Seal, Oil
15	MA-07600051105	2		Bearing
16	MA-10070638AG1	2		Cover
17	MA-27403214200	2		Plug
19	MA-08331000800	2		Seal, Washer
20	MA-F1540108020	8		Bolt
	MA-19632139000	1		Liner Set Includes 23, 24, 25
23	MA-07300005201	AR		Liner t=0.15
24	MA-07300005202	AR		Liner t=0.2
25	MA-07300005203	AR		Liner t=0.3
27	MA-19632141000	2		Shaft
28	MA-10252139000	2		Pinion 17T
29	MA-10322142000	2		Pinion 12T
30	MA-07500063040	2		Bearing
31	MA-07500563044	2		Bearing
32	MA-10322139AG0	2		Holder
33	MA-F1540108020	8		Bolt
35	MA-08300501350	2		O-Ring
36	MA-A0520110040	2		Bolt
37	MA-A3030110002	2		Nut
38	MA-10322143AG0	2		Cover
39	MA-F1550110025	10		Bolt
41	MA-19632144AG0	2		Shaft Wheel
42	MA-19632146000	2		Gear 33T
43	MA-69542-64700	2		Bolt
44	MA-07500063040	2		Bearing
45	MA-07500062060	2		Bearing
46	MA-08412355212	2		Seal, Oil
47	MA-A3600101002	2	/P	Washer
48	MA-10190643000	2		Liner
	MA-10190625000	1	/P	Shim Set, Front Axle Includes 50, 51, 52
50	MA-07310003001	AR		Liner t=0.15
51	MA-07310003002	AR		Liner t=0.2
52	MA-07310003004	AR		Liner t=0.4
54	MA-07400003000	2	/P	Ring
55	MA-07410006201	2		Ring
56	MA-19632147AG0	1		Knuckle Arm L.H.
57	MA-07961020250	1		Bushing
58	MA-19632148AG0	1		Knuckle Arm R.H.
59	MA-07961020250	1		Bushing
	MA-10190624001	1		Shim Set,Knuckle Arm Includes 62, 63, 64
62	MA-14381304000	AR		Liner, Thrust C t=1.4
63	MA-14381305000	AR		Liner,Thrust D t=1.2

www.mymowerparts.com

For Discount Cub Cadet Parts Call 606-678-9623 or 606-561-4983

Ref #	Part Number	Qty	S/P/F	Description
64	MA-14381305100	AR		Liner, Thrust E t=0.8
65	MA-10322149000	4		Bolt
66	MA-A3600101202	4		Washer
	MA-19632151AG0	1		Tie Rod Ass'y. Includes 69-73
69	MA-19632152AG0	1		Rod
70	MA-10302158AG0	1	/P	End Ass'y - Tie Rod R.H. Side (L.H. Thread) Includes Ref. Nos. 80 thru 83
71	MA-10302157AG0	1	/P	End Ass'y - Tie Rod L.H. Side (R.H. Thread) Includes Ref. Nos. 80 thru 83
72	MA-67354-00201	1		Nut (R.H. Thread) M17
73	MA-67354-00301	1		Nut (L.H. Thread) M17
74	MA-10211283001	2		Washer
78		1		Order Ref. No. 71
79		1		Order Ref. No. 70
80	MA-67441-00916	2	S	Cover, Dust
81	MA-A6500600600	2		Nipple, Grease
82	MA-67441-00918	2		Nut
83	MA-05200130025	2		Pin, Split

www.mymowerparts.com

For Discount Cub Cadet Parts Call 606-678-9623 or 606-561-4983

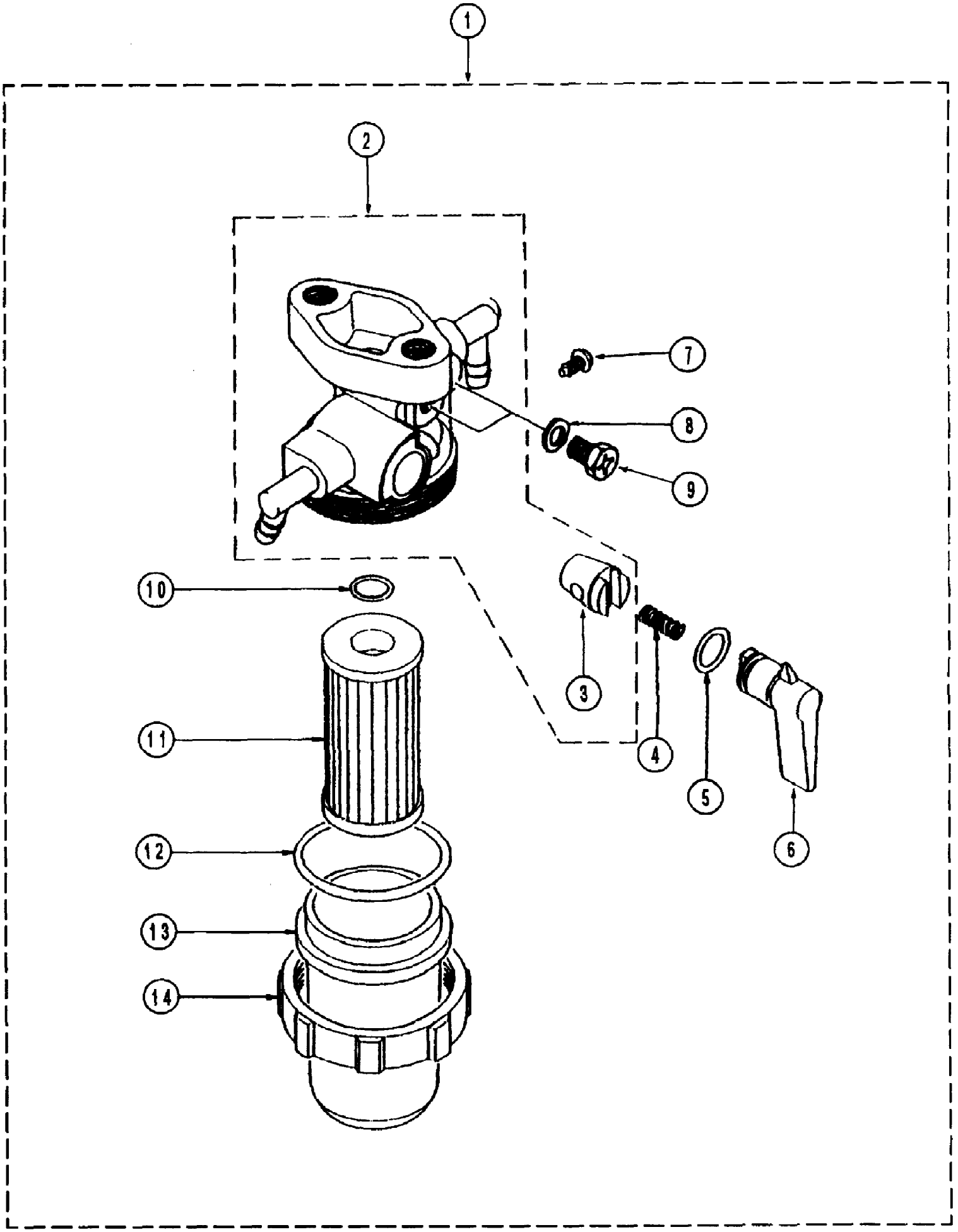

www.mymowerparts.com

For Discount Cub Cadet Parts Call 606-678-9623 or 606-561-4983

Ref #	Part Number	Qty	S/P/F	Description
1	MA-30A62-00100	1	/P	Filter Ass'y
2		1		Body Sub Ass'y Furnish Filter Ass'y.
3		1		Valve Furnish Filter Ass'y.
4	MA-MM404873	1		Spring, Valve
5	MA-MM404874	1	S	O-Ring, Valve
6	MA-MM404871	1		Lever
7	MA-MM404875	1		Screw
8	MM-MM404884	2		Packing
9	MA-30A62-00105	2		Screw, Air Vent
10	MA-MM404881	1	S	O-Ring, Element
11	MA-MM404879	1	S	Element
12	MA-MM404878	1		O-Ring, Filter Cup
13	MA-MM400889	1	/P	Cup, Filter
14	MA-MM404877	1		Nut, Ring

www.mymowerparts.com

For Discount Cub Cadet Parts Call 606-678-9623 or 606-561-4983

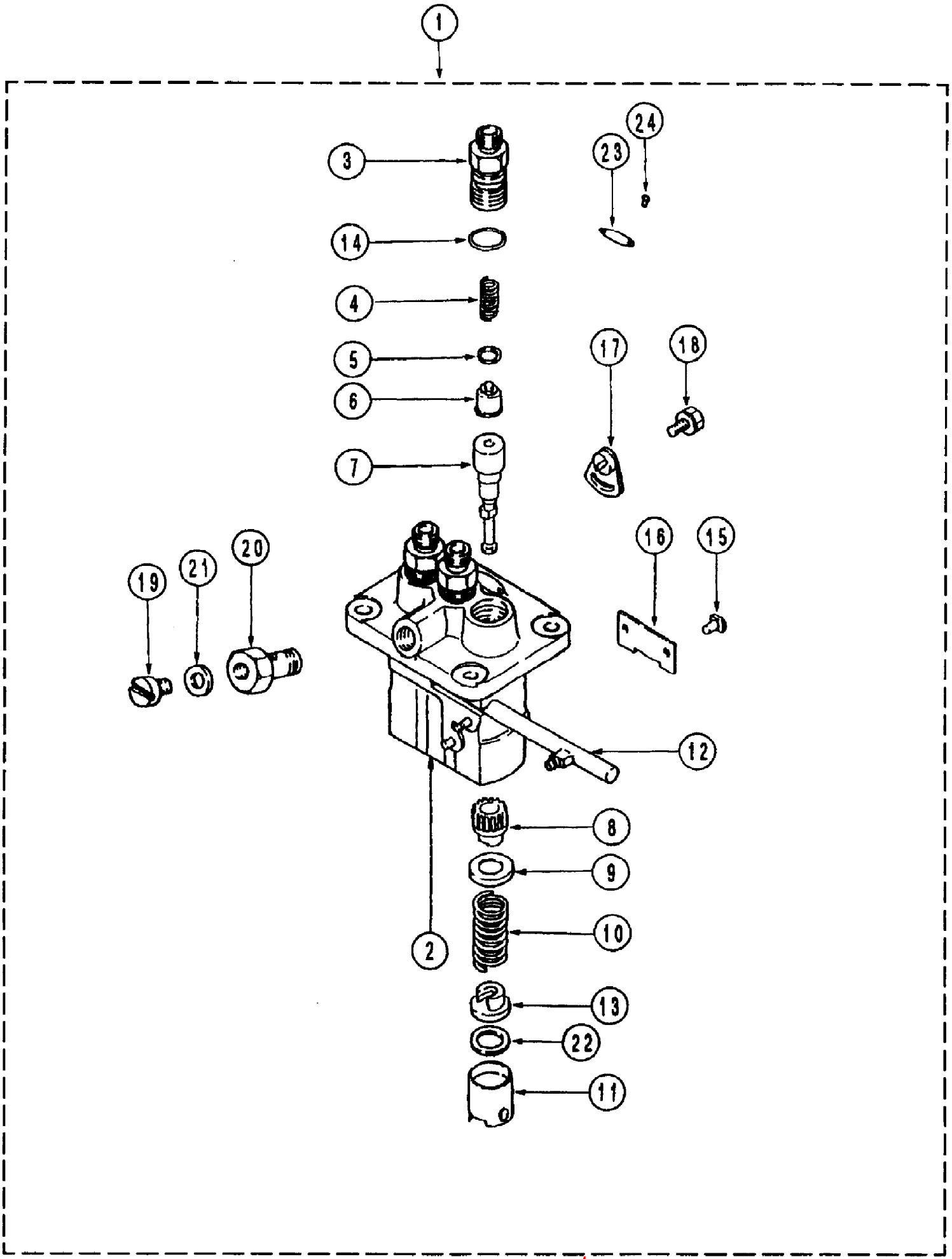

www.mymowerparts.com

For Discount Cub Cadet Parts Call 606-678-9623 or 606-561-4983

Ref #	Part Number	Qty	S/P/F	Description
1	MA-31B65-03050	1		Pump Ass'y., Fuel Inj.
2	MA-09011-05110	1		Housing Sub Ass'y.
3	MA-09013-10520	3	/P	Holder, Delivery V.
4	MA-09013-60640	3		Spring, Delivery V.
5	MA-09013-70130	3	/P	Gasket, Delivery V.
6	MA-09014-02500	3		Valve Sub Ass'y.
7	MA-09015-05550	3		Element Sub Ass'y.
8	MA-09016-10210	3	/P	Sleeve, Control
9	MA-09016-30082	3		Seat, Spring, Upper
10	MA-09016-40170	3	/P	Spring, Plunger
11	MA-09017-00170	3	/P	Tappet Sub Ass'y.
12	MA-09021-00470	1	/P	Rack Ass'y., Control
13	MA-09030-10060	3	/P	Seat, Spring Lower
14	MA-MM500438	3	S	O-Ring
15	MA-09018-30050	3	/P	Pin, Tappet Guide
16	MA-09046-70040	1	/P	Plate
17	MA-09006-80020	2	/P	Plate, Adjusting
18	MA-94904-80800	2		Bolt, Washer Head
19	MA-09024-40180	1		Screw, Air Bleeder
20	MA-09024-50210	1	/P	Screw, Hollow
21	MA-94901-81020	1		Washer, Pipe Union
22		AR		Plate, Tappet Shim
23	MA-09450-36810	1		Plate, Name
24	MA-MM500429	2		Rivet

www.mymowerparts.com

For Discount Cub Cadet Parts Call 606-678-9623 or 606-561-4983

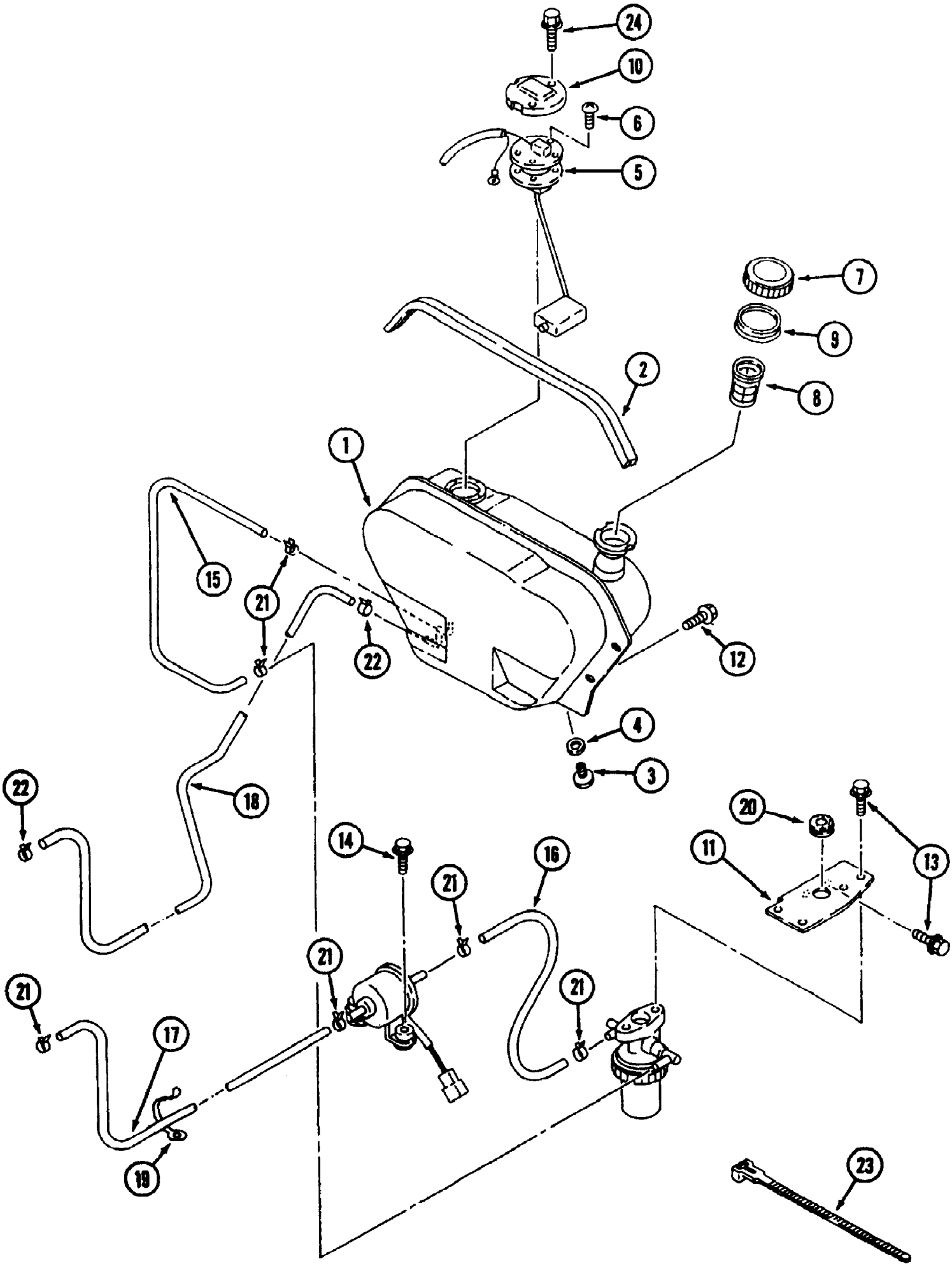

www.mymowerparts.com

For Discount Cub Cadet Parts Call 606-678-9623 or 606-561-4983

Ref #	Part Number	Qty	S/P/F	Description
	MA-19630101BD0	1	/P	Tank Ass'y. Includes 1-10, 24
1	MA-19630103BD0	1	/P	Tank, Fuel
2	MA-19630105000	1		Trim
3	MA-27403214200	1		Plug
4	MA-08331000800	1		Washer, Seal
5	MA-10210113000	1		Fuel Unit
6	MA-H2420104012	3		Screw
7	MA-09805000004	1		Cap
8	MA-09806000002	1		Filter
9	MA-09806100001	1		Packing
10	MA-19630107BD0	1		Cover, Fuel Unit
11	MA-19630112BD0	1		Bracket, Filter
12	MA-H1540108025	4		Bolt
13	MA-H1550110020	3		Bolt
14	MA-H1640106025	2		Bolt
15	MA-09810060450	1		Hose
16	MA-09810060300	1		Hose
17	MA-09810061750	1		Hose
18	MA-09810042050	1		Hose
19	MA-00502114083	1		Clamp
20	MA-00401003000	1		Grommet
21	MA-00504112005	6		Clamp, Hose
22	MA-00504110005	2		Clamp, Hose
23	MA-00511032070	5		Wire Band
24	MA-H2420104016	2		Screw

www.mymowerparts.com

For Discount Cub Cadet Parts Call 606-678-9623 or 606-561-4983

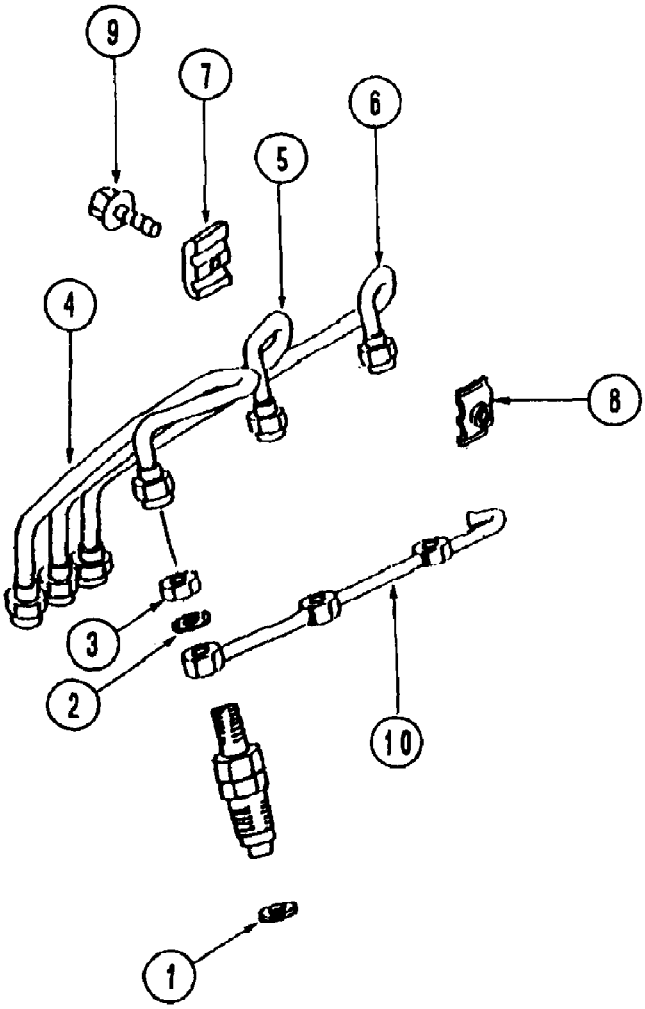

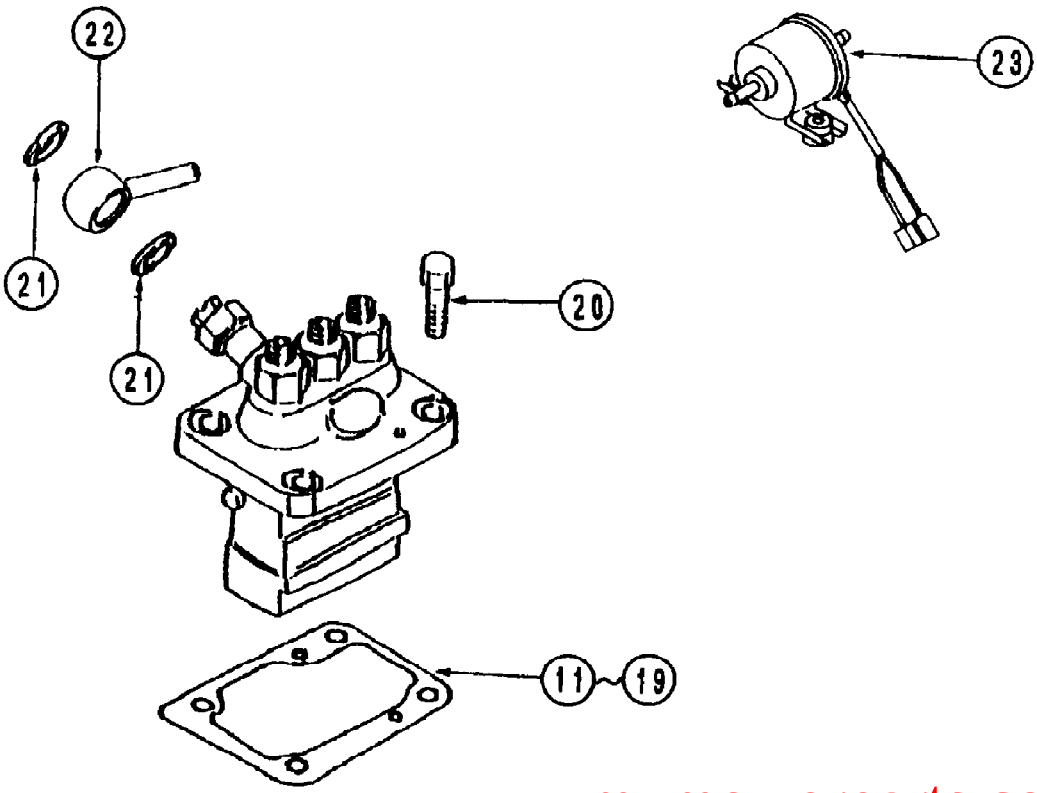

www.mymowerparts.com

For Discount Cub Cadet Parts Call 606-678-9623 or 606-561-4983

Ref #	Part Number	Qty	S/P/F	Description
1	MA-MD070717	3		Gasket, Holder
2	MA-MD068355	3		Gasket,Fuel Return
3	MA-MD068353	3		Nut
4	MA-31A61-04100	1		Pipe, Inj. No.1
5	MA-31A61-04200	1		Pipe, Inj. No.2
6	MA-31A61-04300	1		Pipe, Inj. No.3
7	MA-MM430703	2		Clamp
8	MA-MM430614	2		Clamp
9	MA-F1825-06025	2		Bolt, W/Washer
10	MA-31B61-02600	1		Pipe, Fuel Leak-Off
11	MA-MM409040	AR		Shim T=0.2
12	MA-MM409041	AR		Shim T=0.3
13	MA-MM409042	AR		Shim T=0.4
14	MA-MM409043	AR		Shim T=0.5
15	MA-MM409044	AR		Shim T=0.6
16	MA-MM409045	AR		Shim T=0.7
17	MA-MM409046	AR		Shim T=0.8
18	MA-MM409047	AR		Shim T=0.9
19	MA-MM409048	AR		Shim T=1.0
20	MA-F1035-08020	4	/P	Bolt
21	MA-MK66112000	2		Washer, Seal
22	MA-MM304916	1		Color, Union
23	MA-MM436739	1	S	Fuel Pump Ass'y.

www.mymowerparts.com

For Discount Cub Cadet Parts Call 606-678-9623 or 606-561-4983

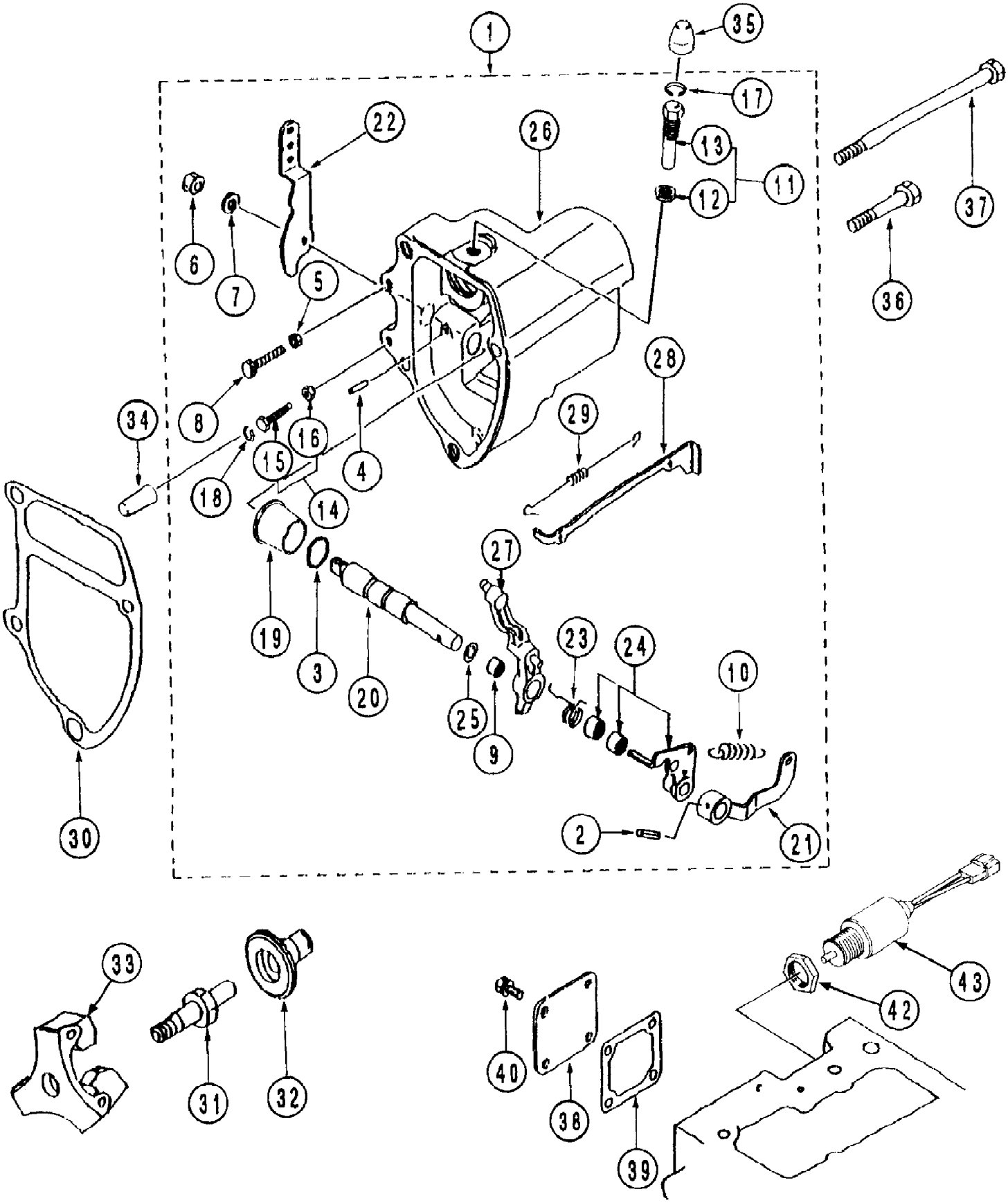

www.mymowerparts.com

For Discount Cub Cadet Parts Call 606-678-9623 or 606-561-4983

Ref #	Part Number	Qty	S/P/F	Description
1	MA-31B63-11070	1	S	Case Ass'y., Governor
2	MA-F2850-03020	1	S	Pin, Spring
3	MA-08300100101	1	/P	O-Ring
4	MA-K8712630	1		Pin, Grooved
5	MA-MF430004	2		Nut
6	MA-MF430725	1		Nut, Jam
7	MA-MF450405	1		Washer, Spring
8	MA-MM33131701	1		Bolt, Speed Set
9	MA-MM406420	1		Bearing, Needle
10	MA-MM433673	1		Spring
11		1		Screw Ass'y., Rack Set Not used on this product
12	MA-30L63-00600	1		Nut, Torque Set
13	MA-31A63-05601	1	/P	Screw, Rack Set
14	MA-30L63-00030	1		Bolt Ass'y., High Speed
15	MA-30L63-02100	1		Bolt, High Speed Set
16	MA-30L63-02300	1		Nut, High Speed Set
17	MA-30L63-00700	1		C-Ring, Torque Set
18	MA-30L63-02600	1		C-Ring, High Speed Set
19	MA-31A63-01800	1		Cover, Governor Shaft
20	MA-31A63-02600	1		Shaft, Governor
21	MA-31A63-02700	1		Lever, Gov. Spring
22	MA-31A63-04700	1		Lever, Speed
23	MA-31A63-05300	1		Spring, Start
24	MA-31A63-01010	1	S	Lever Ass'y., Tension
25	MA-31A63-15200	1		Shim, Governor Shaft
26	MA-31A63-22100	1		Case, Governor
27	MA-31A63-15500	1		Lever Ass'y., Governor
28	MA-31B63-00400	1		Tie-Rod
29	MA-31B63-00500	1		Spring, Tie-Rod
30	MA-31A63-12201	1	S	Gasket, Governor Case
31	MA-31A63-10305	1		Shaft, Sliding, Sleeve
32	MA-31A63-25101	1		Sleeve, Sliding
33	MA-31A63-11061	1		Weight Ass'y., Governor
34	MA-30L63-02400	1		Cover High Speed Set
35	MA-30L63-00800	1		Cover, Torque Set
36	MA-F1035-08045	3		Bolt
37	MA-31A63-02300	1		Bolt, Gov. Case
38	MA-MM409150	1		Cover, Tie Rod
39	MA-MM40915101	1	S	Gasket, Tie Rod Cover
40	MA-F1440106014	4		Bolt, W/Washer
42	MA-MM409671	1		Nut
43	MA-30A87-10400	1	S	Solenoid Ass'y.

www.mymowerparts.com

For Discount Cub Cadet Parts Call 606-678-9623 or 606-561-4983

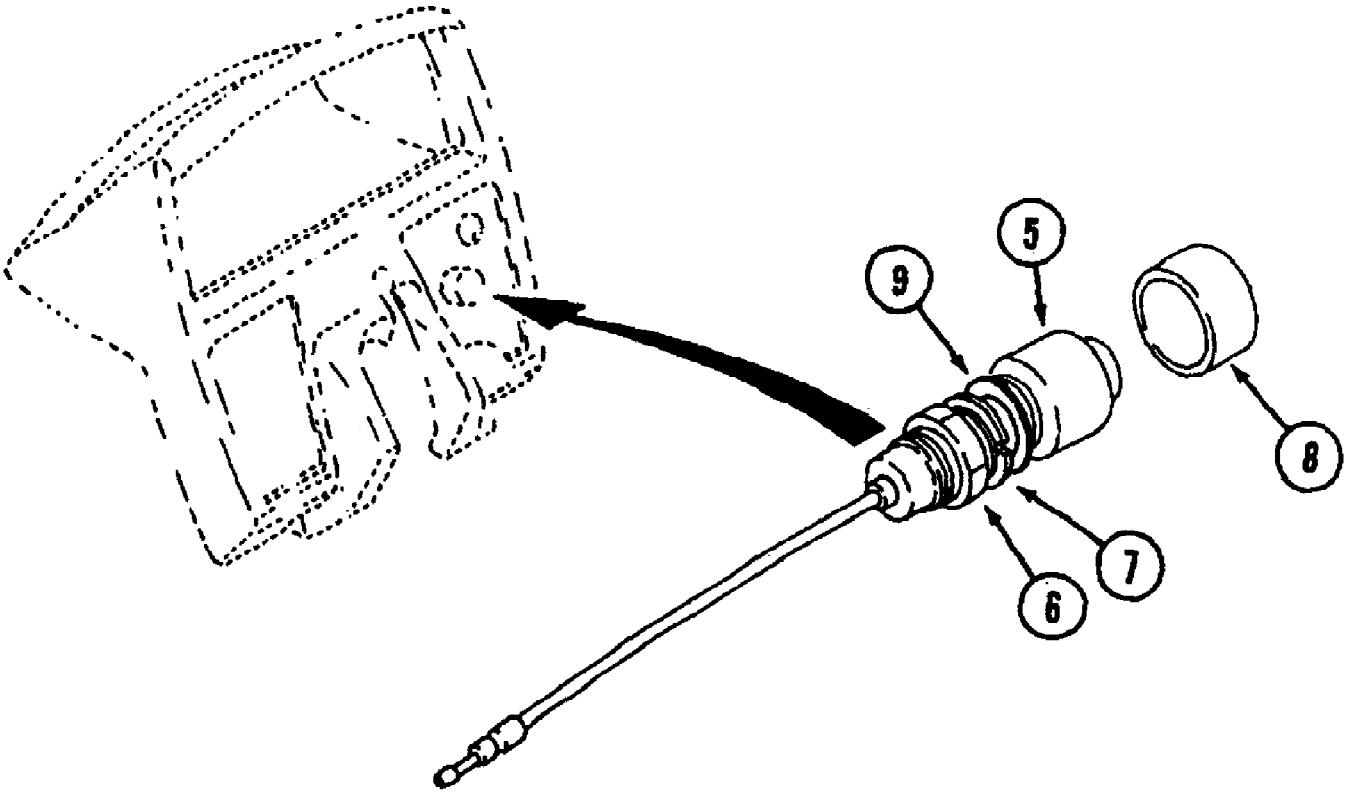

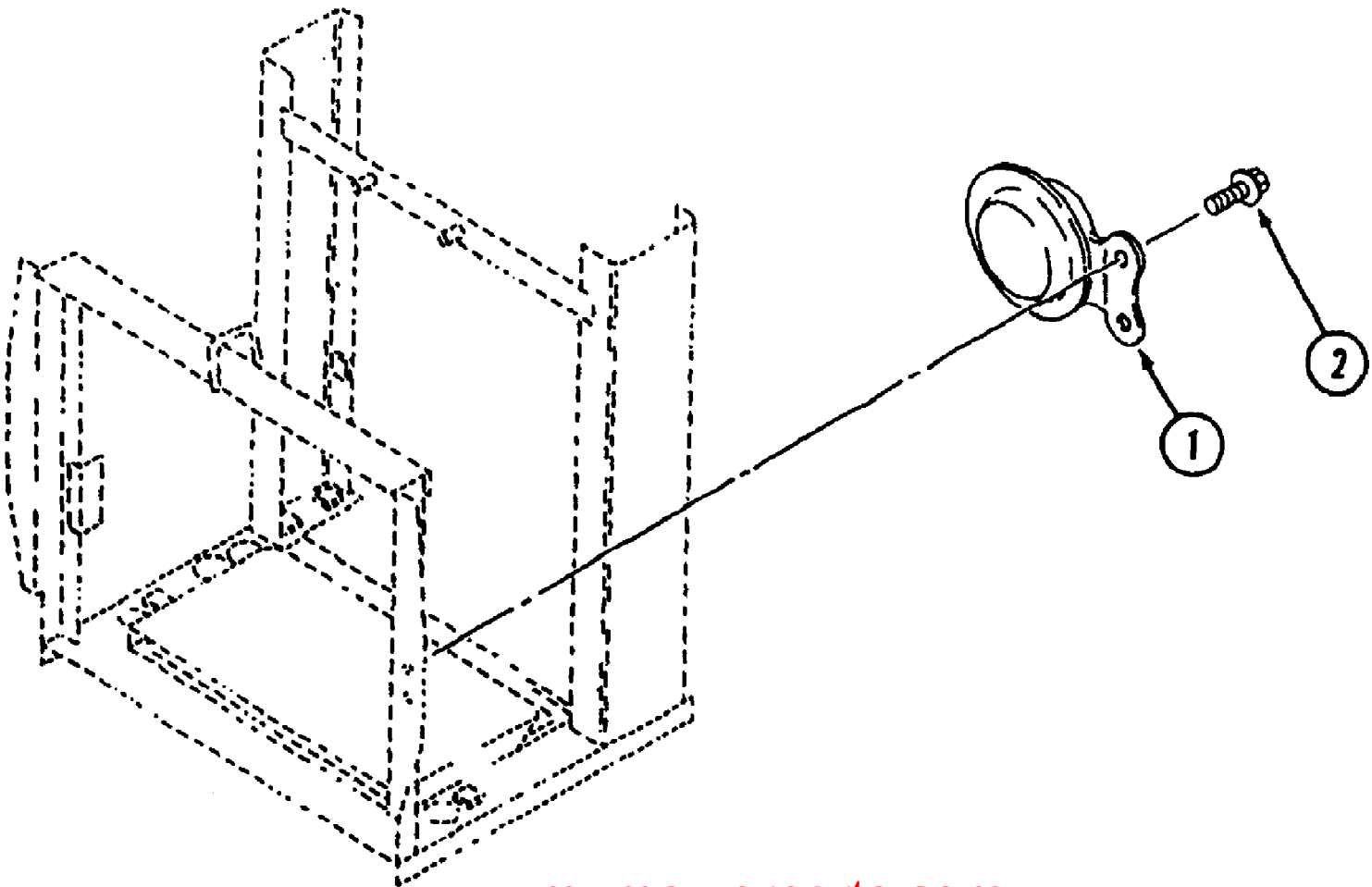

www.mymowerparts.com

For Discount Cub Cadet Parts Call 606-678-9623 or 606-561-4983

Ref #	Part Number	Qty	S/P/F	Description
		1		Horn Kit Includes 1-8; Furnish Component Parts
1	MA-67404-02100	1		Horn
2	MA-H1440106016	1	/P	BOLT,W/WASHER
	MA-12187771000	1		Horn Switch Ass'y. Includes 5-9
5	MA-19842949110	1		Switch Ass'y.
6	MA-19842962120	1		Nut
7	MA-A3600100802	1		Washer
8	MA-12187772000	1		Boot
9	MA-12187773000	1		Packing

www.mymowerparts.com

For Discount Cub Cadet Parts Call 606-678-9623 or 606-561-4983

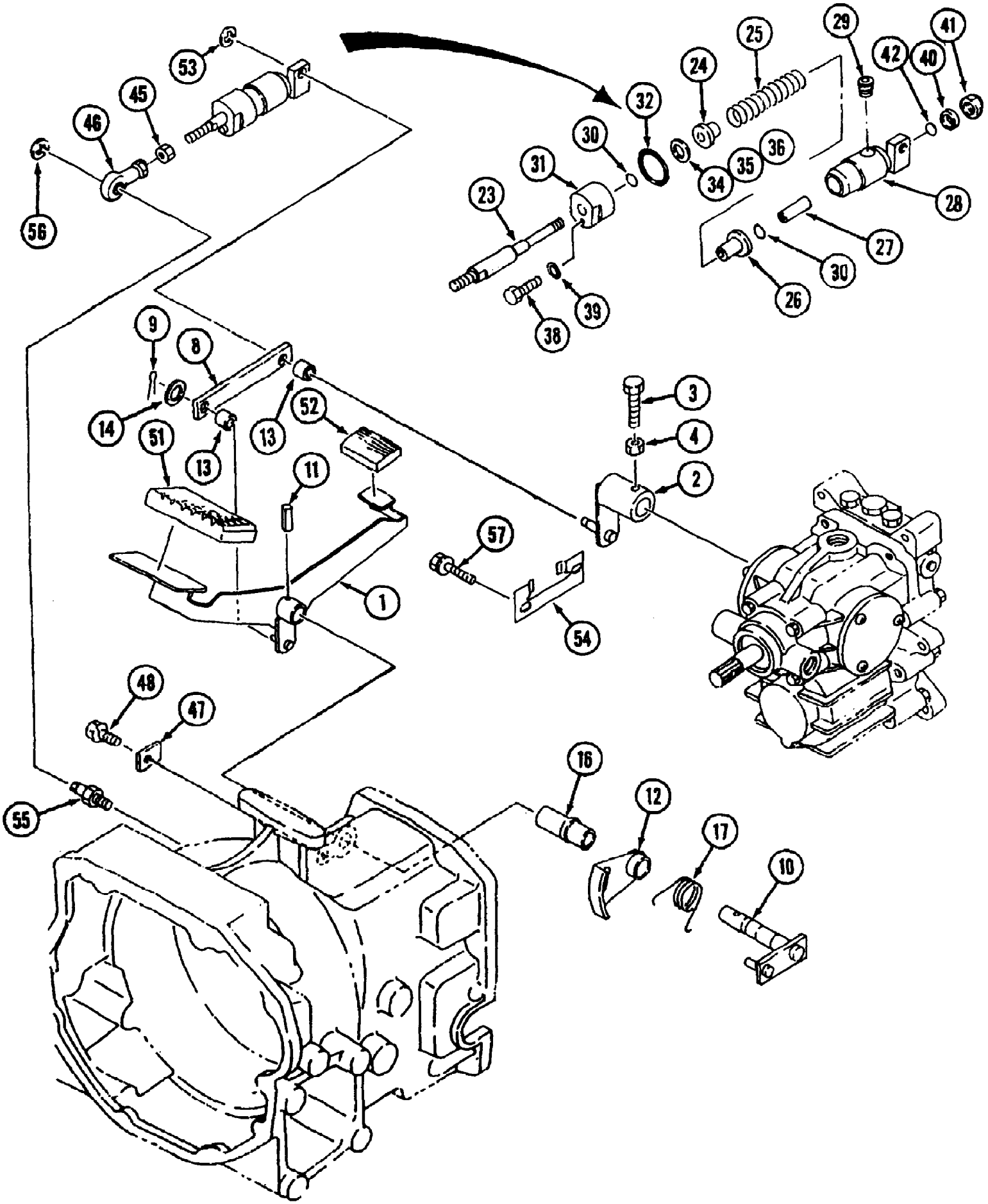

www.mymowerparts.com

For Discount Cub Cadet Parts Call 606-678-9623 or 606-561-4983

Ref #	Part Number	Qty	S/P/F	Description
1	MA-19632301AG0	1		Pedal, HST
2	MA-19632303AG0	1		Arm
3	MA-19632304000	1		Bolt
4	MA-A3030110003	1	/P	Nut
8	MA-19632308000	1		Plate
9	MA-05200130020	1		Pin, Split
10	MA-19632311000	1		Shaft, Pedal
11	MA-05500006032	1		Pin, Spring
12	MA-19632313000	1		Arm, Lock
13	MA-19632309000	2		Bushing
14	MA-08331001000	1	/P	Seal, Washer
16	MA-19632312000	1		Shaft
17	MA-19632317000	1		Spring
	MA-19632321001	1	/P	Return, Spring Ass'y. Includes 23-42
23	MA-19632361000	1		Shaft A
24	MA-19632366000	1		Guide A
25	MA-19871263000	1		Spring
26	MA-19632365000	1		Guide B
27	MA-19632362000	1		Shaft B
28	MA-19632363000	1		Cap A
29	MA-A6010101000	1	/P	Plug
30	MA-08300100120	2	S	O-Ring
31	MA-19632364000	1		Cap B
32	MA-08300100260	1		O-Ring
	MA-19632368000	1		Liner, Set Includes 34-36
34	MA-07310001201	AR		Liner t=0.15
35	MA-07310001203	AR		Liner t=0.3
36	MA-07310001205	AR		Liner t=0.5
38	MA-A2000105008	1		Bolt
39	MA-08330000500	1		Seal, Washer
40	MA-19632367000	1		Collar
41	MA-A3500106000	1		Nut
42	MA-08300100060	1		O-Ring
45	MA-A3010108002	1		Nut
46	MA-10302436000	1		Link, Ball R
47	MA-19631724000	1		Plate
48	MA-F1550110020	1		Bolt
51	MA-11931812000	1		Cover, Pedal
52	MA-10320228000	1		Cover, Pedal
53	MA-07420100800	1		Ring
54	MA-19632332000	1		Plate
55	MA-19632333001	1		Bolt, Set
56	MA-07420100600	1		Ring
57	MA-H1550110020	2		Bolt

www.mymowerparts.com

For Discount Cub Cadet Parts Call 606-678-9623 or 606-561-4983

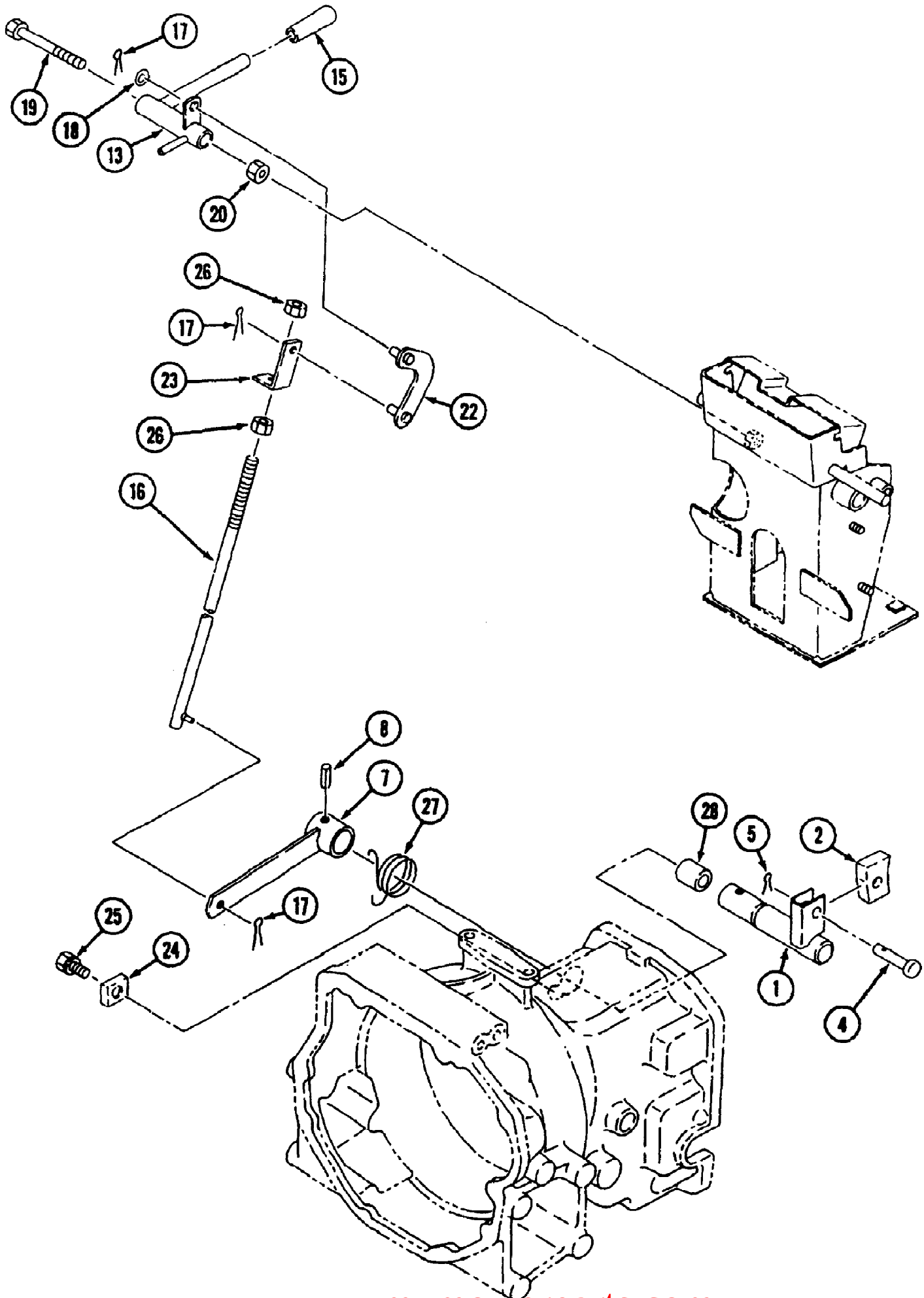

www.mymowerparts.com

For Discount Cub Cadet Parts Call 606-678-9623 or 606-561-4983

Ref #	Part Number	Qty	S/P/F	Description
1	MA-19632334000	1		Arm, Brake
2	MA-19632336000	1		Shoe
4	MA-05620108025	1		Pin, Clevis
5	MA-05200125016	1	S	Pin, Split
7	MA-19632338AG0	1		Arm
8	MA-05500006032	1		Pin, Spring
13	MA-19632347AG1	1		Lever Cruise
15	MA-14212284000	1		Grip
16	MA-19632352000	1		Rod
17	MA-05200125016	3	S	Pin, Split
18	MA-03500130613	AR		Washer
19	MA-A5150112095	1		Bolt
20	MA-A3030112003	1		Nut
22	MA-19632348001	1		Plate
23	MA-19632354000	1		Plate
24	MA-19631724000	1		Plate
25	MA-F1550110020	1		Bolt 0
26	MA-A3000106002	2		Nut
27	MA-19632339000	1		Spring
28	MA-07972020200	1		Bushing

www.mymowerparts.com

For Discount Cub Cadet Parts Call 606-678-9623 or 606-561-4983

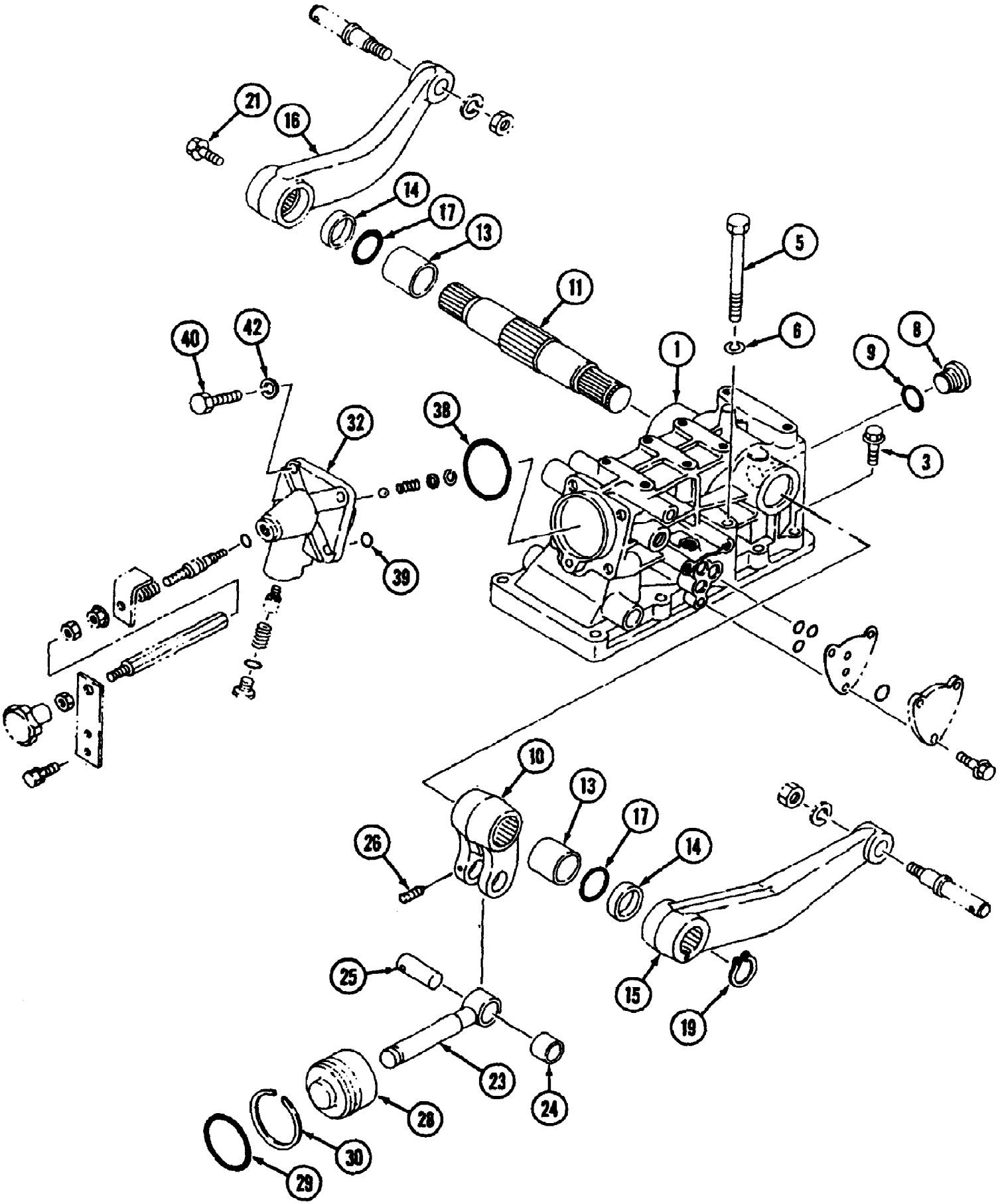

www.mymowerparts.com

For Discount Cub Cadet Parts Call 606-678-9623 or 606-561-4983

Ref #	Part Number	Qty	S/P/F	Description
1	MA-19632401AG0	1		Case, Hydraulic
	MA-19632401AG1	1		Case, Hydraulic Replaces MA-19632401AG0 by also ordering MA-F1540112030 (Qty.4) bolts for fender bracket
	MA-F1540112030	4		Bolts, Fender Bracket
3	MA-F1550110045	7		Bolt
5	MA-A0550110100	1		Bolt
6	MA-A3600101002	1	/P	Washer
8	MA-10072441000	1		Plug
9	MA-08300100210	1		O-Ring
10	MA-19632407000	1		Arm, Power
11	MA-19632409000	1		Shaft, Hydraulic
13	MA-19632411000	2		Bushing
14	MA-19632412000	2		Collar
15	MA-19632413AG1	1	/P	Arm, Lift LH
16	MA-19632414AG1	1	/P	Arm, Lift RH
17	MA-08300120350	2		O-Ring
19	MA-07400003400	1		Ring
21	MA-F1550110025	1		Bolt
23	MA-11742416002	1		Rod, Piston
24	MA-07972022200	1		Bushing
25	MA-19632418000	1		Pin
26	MA-HA130401000	1		Screw
28	MA-19632419000	1		Piston
29	MA-08300100550	1		O-Ring
30	MA-08320100550	1		Ring
32	MA-19632421AG0	1		Head, Cylinder
38	MA-08301200600	1		O-Ring
39	MA-08301100100	1		O-Ring
40	MA-A9450112045	4		Bolt
42	MA-A3600101202	4		Washer

www.mymowerparts.com

For Discount Cub Cadet Parts Call 606-678-9623 or 606-561-4983

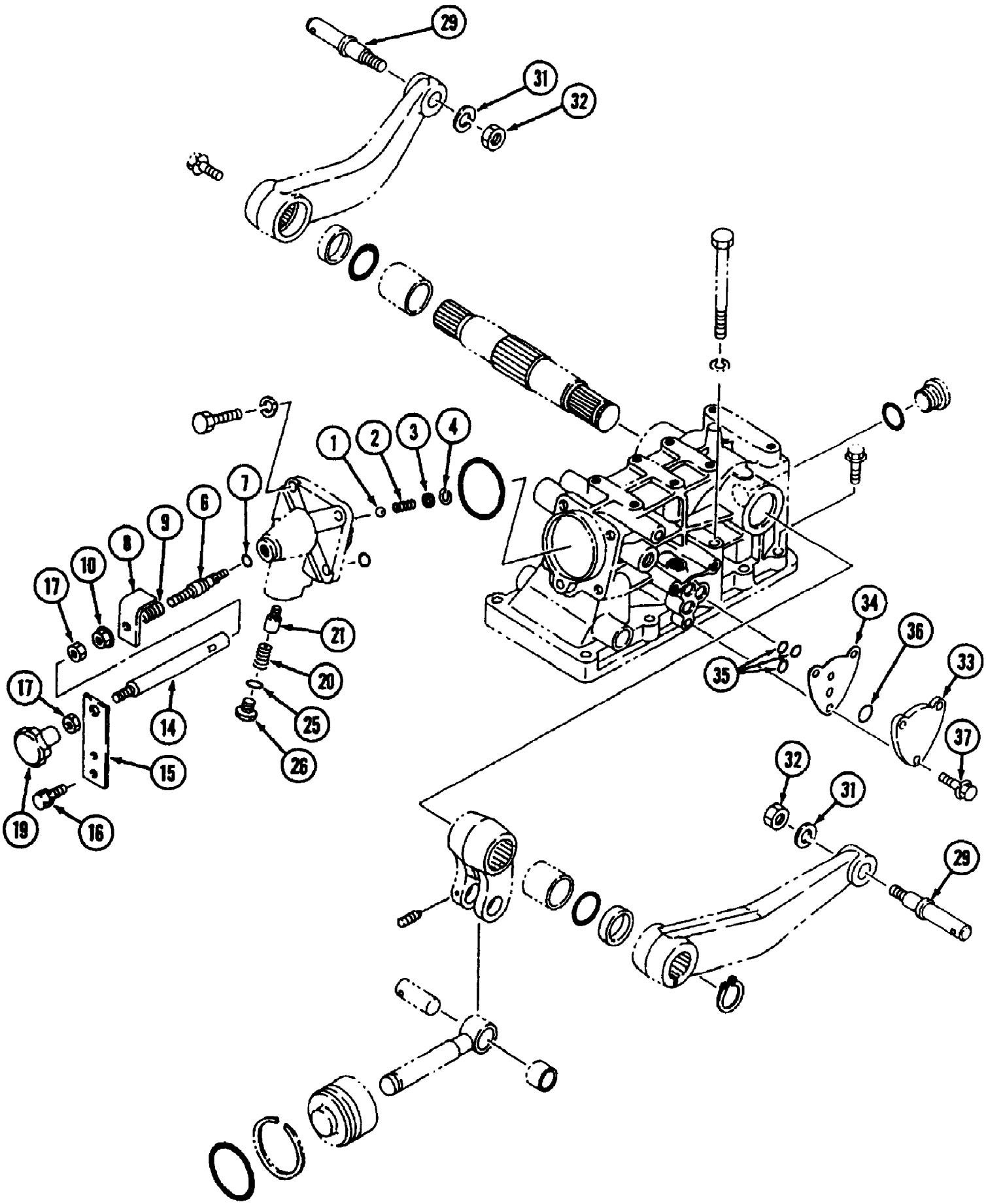

www.mymowerparts.com

For Discount Cub Cadet Parts Call 606-678-9623 or 606-561-4983

Ref #	Part Number	Qty	S/P/F	Description
1	MA-08000001100	1		Ball
2	MA-11501707000	1		Spring
3	MA-19822413000	1		Washer
4	MA-07410001500	1		Ring
6	MA-19082411000	1		Screw, Pilot
7	MA-08301100060	1		O-Ring
8	MA-19632423AG0	1		Lever, Stopper
9	MA-10252447000	1		Spring
10	MA-F3010108001	1		Nut
14	MA-19632424000	1		Shaft
15	MA-19632425000	1		Plate
16	MA-F1540108016	2		Bolt
17	MA-A3010108002	2		Nut
19	MA-19062432000	1		Knob
20	MA-27172055000	1		Spring
21	MA-19632427000	1		Poppet
25	MA-08300100140	1		O-Ring
26	MA-27172056000	1		Plug
29	MA-10382406000	2		Pin, Lift Arm
31	MA-A3600101602	2		Washer
32	MA-A3030116002	2		Nut
33	MA-10072448AG0	1		Cap
34	MA-10072449000	1		Plate
35	MA-08301100120	3	/P	O-Ring
36	MA-08301100250	1		O-Ring
37	MA-F1540108040	3		Bolt

www.mymowerparts.com

For Discount Cub Cadet Parts Call 606-678-9623 or 606-561-4983

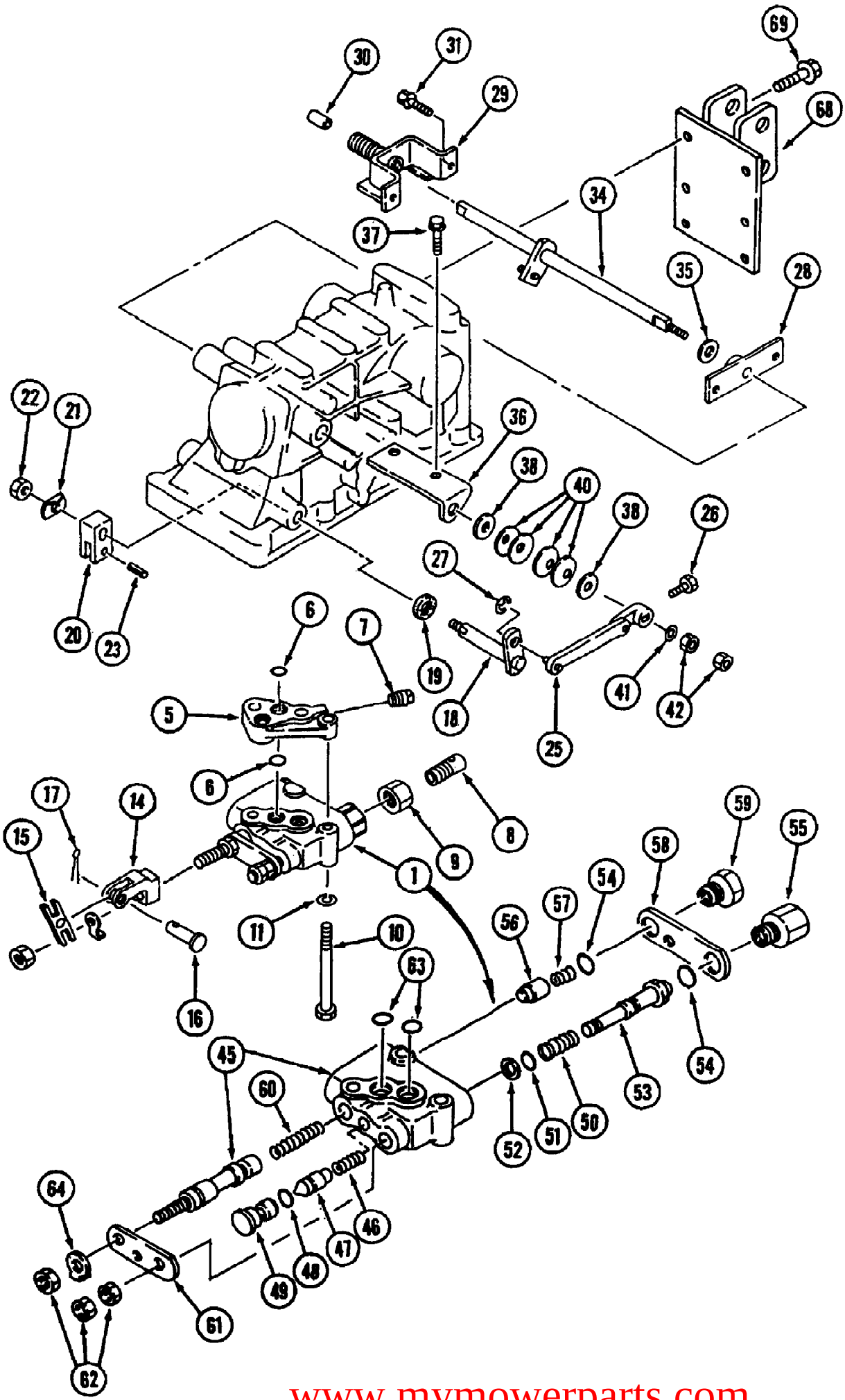

www.mymowerparts.com

For Discount Cub Cadet Parts Call 606-678-9623 or 606-561-4983

Ref #	Part Number	Qty	S/P/F	Description
1	MA-10052415000	1		Valve, Control
5	MA-10032421000	1		Spacer
6	MA-08301100120	2	/P	O-Ring
7	MA-A6000101000	1		Plug
8	MA-19652451000	1		Pipe
9	MA-A3030114002	1		Nut
10	MA-A0500108070	2		Bolt
11	MA-A3600100802	2		Washer
14	MA-10032418001	1		Joint
15	MA-10032419001	1		Link, Valve
16	MA-05620106030	1		Pin, Clevis
17	MA-05200125016	1	S	Pin, Split
18	MA-10032414000	1		Shaft, Link
19	MA-08401012227	1		Oil, Seal
20	MA-10032415000	1		Shifter, Valve
21	MA-11352426000	1		Plate
22	MA-A3010108002	1		Nut
23	MA-05500008016	1		Pin, Spring
25	MA-19642453AG0	1		Lever Ass'y.
26	MA-A0400106012	1		Bolt, W/Washer
27	MA-07420100600	1		Ring
28	MA-19642456000	1		Plate
29	MA-19642457000	1		Bracket
30	MA-07961012120	1		Bushing
31	MA-F1540108020	2		Bolt, W/Washer
34	MA-19652458AG0	1		Shaft
35	MA-19041264000	1		Lining Brake
36	MA-10032425AG0	1		Plate
37	MA-F1550110020	1		Bolt
38	MA-31212559000	2	S	Liner
40	MA-03560101201	4		Spring, Conical
41	MA-03500140818	1		Washer
42	MA-A3010108002	2		Nut
45	MA-10052415000	1		Body Ass'y.
46	MA-19952436120	1		Spring
47	MA-10032416180	1		Valve, Check
48	MA-08301100090	1		O-Ring
49	MA-10032416190	1		Seat
50	MA-11802471190	1		Spring
51	MA-08300100070	1		O-Ring
52	MA-11802471180	1		Ring, Back Up
53	MA-10032416140	1		Poppet
54	MA-08300100150	2		O-Ring
55	MA-10032416160	1		Plug
56	MA-10032416170	1		Valve, Unloader
57	MA-11802471240	1	S	Spring
58	MA-69473-10711	1		Plate
59	MA-10032416150	1		Plug
60	MA-10052415130	1		Spring, Return
61	MA-10032416210	1		Plate
62	MA-A3010108003	3		Nut
63	MA-08301100120	2	/P	O-Ring
64	MA-11802471130	1		Stopper

www.mymowerparts.com

For Discount Cub Cadet Parts Call 606-678-9623 or 606-561-4983

Ref #	Part Number	Qty	S/P/F	Description
68	MA-19632442AG0	1		Bracket, Top Link
69	MA-F1540112030	6		Bolt, W/Washer

www.mymowerparts.com

For Discount Cub Cadet Parts Call 606-678-9623 or 606-561-4983

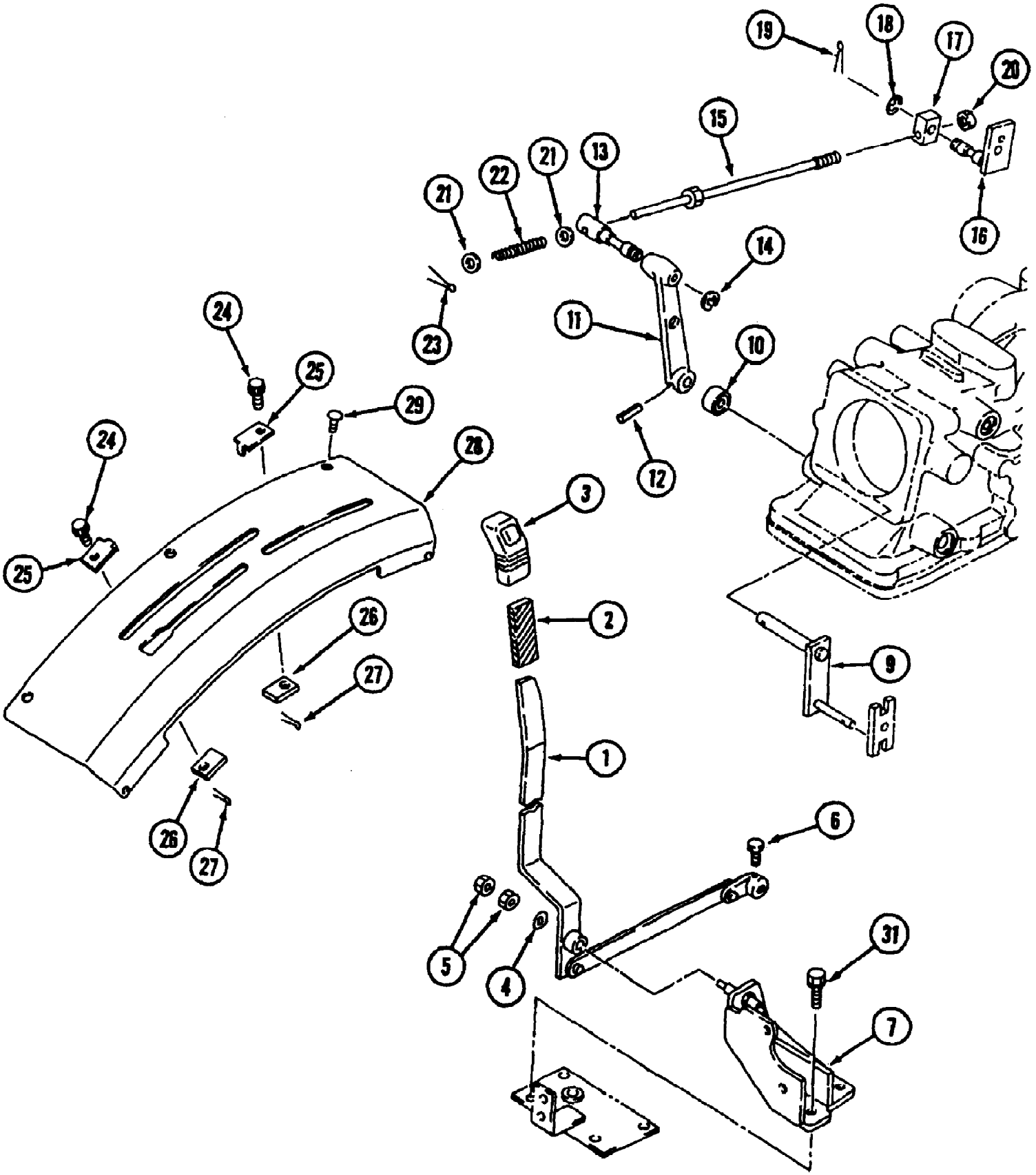

www.mymowerparts.com

For Discount Cub Cadet Parts Call 606-678-9623 or 606-561-4983

Ref #	Part Number	Qty	S/P/F	Description
	MA-19652462AG0	1		Lever, P/C Ass'y. Includes 1, 2
1	MA-19652463AG0	1		Lever, P/C Ass'y.
2	MA-19632439000	1		Tube
3	MA-10302444000	1		Grip
4	MA-03500150822	1		Washer
5	MA-A3010108002	2		Nut
6	MA-A0400106012	1		Bolt
7	MA-19652461AG0	1		Bracket, Lever
9	MA-10032413000	1		Shifter
10	MA-08401012227	1		Oil Seal
11	MA-10032409AG0	1		Arm, Feedback
12	MA-05500005032	1		Pin, Spring
13	MA-10212428AG0	1		Pin, Joint
14	MA-07420100800	1		Ring
15	MA-10032408000	1		Link, Feedback
16	MA-10032406AG0	1		Plate
17	MA-10032407000	1		Joint
18	MA-03500130815	1		Washer
19	MA-05200125016	1	S	Pin, Split
20	MA-A3010108002	1		Nut
21	MA-03500130815	2		Washer
22	MA-10032412000	1		Spring
23	MA-05200125016	1	S	Pin, Split
24	MA-10212438000	2		Grip
25	MA-10302445000	2		Stopper
26	MA-19642466000	2		Plate
27	MA-05200120016	2		Pin, Split
28	MA-19652447BD0	1		Lever, Guide R.H.
29	MA-A2520706012	5		Screw
31	MA-F1550110030	2		Bolt, W/Washer

www.mymowerparts.com

For Discount Cub Cadet Parts Call 606-678-9623 or 606-561-4983

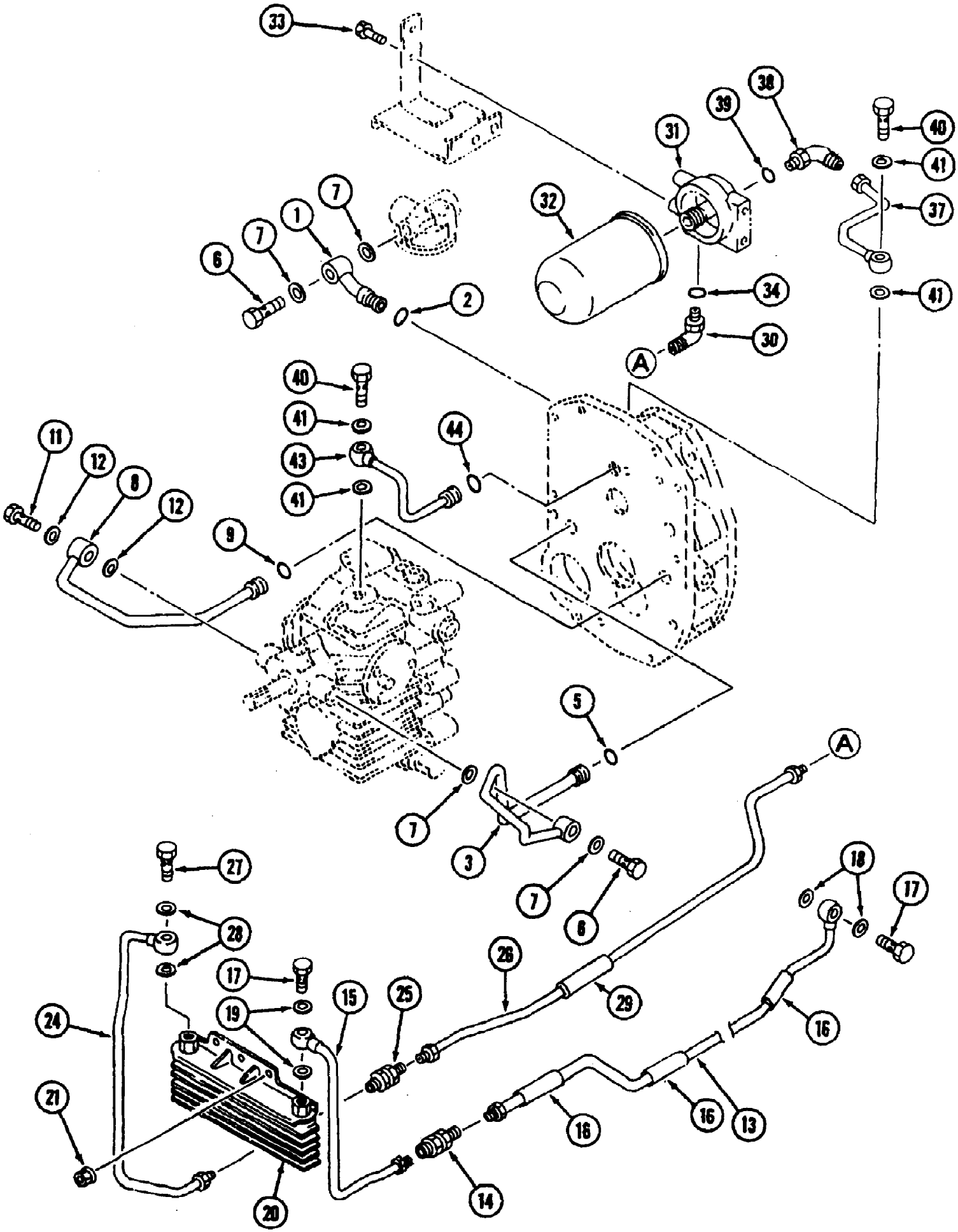

www.mymowerparts.com

For Discount Cub Cadet Parts Call 606-678-9623 or 606-561-4983

Ref #	Part Number	Qty	S/P/F	Description
1	MA-19632541AG0	1		Pipe
2	MA-08301100160	1		O-Ring
3	MA-19632544AG0	1		Pipe K
5	MA-08301100140	1		O-Ring
6	MA-10302534000	2		Bolt, Eye
7	MA-08331001600	4		Seal, Washer
8	MA-19632547AG0	1		Pipe L
9	MA-08301100140	1		O-Ring
11	MA-10302534000	1		Bolt, Eye
12	MA-08331001600	2		Seal, Washer
13	MA-19672545AG0	1		Pipe, M Ass'y.
14	MA-06201112001	1		Body (Union)
15	MA-19672546AG0	1		Pipe, N Ass'y.
16	MA-11352474000	3		Pipe
17	MA-19812453000	2		Bolt, Eye
18	MA-08331001600	2		Seal, Washer
19	MA-08331001601	2		Seal, Washer
20	MA-19632556000	1		Cooler, Oil
21	MA-F3010108001	2		Nut
24	MA-19672552AG0	1		Pipe, P Ass'y.
25	MA-06201112001	1		Body (Union)
26	MA-19672554AG0	1		Pipe, Q Ass'y.
27	MA-19812453000	1		Bolt, Eye
28	MA-08331001601	2		Seal, Washer
29	MA-11352474000	1		Pipe
30	MA-06205112171	1		Body (Elbow)
31	MA-19632559AG0	1	/P	Head, Filter
32	MA-19632558000	1		Filter, Oil
33	MA-F1540108016	2		Bolt, W/Washer
34	MA-08301100140	1		O-Ring
37	MA-19632560AG0	1		Pipe, R Ass'y.
38	MA-06205112171	1		Body (Elbow)
39	MA-08301100140	1		O-Ring
40	MA-19812453000	2		Bolt, Eye
41	MA-08331001600	4		Seal, Washer
43	MA-19632563AG0	1		Pipe, S
44	MA-08301100140	1		O-Ring

www.mymowerparts.com

For Discount Cub Cadet Parts Call 606-678-9623 or 606-561-4983

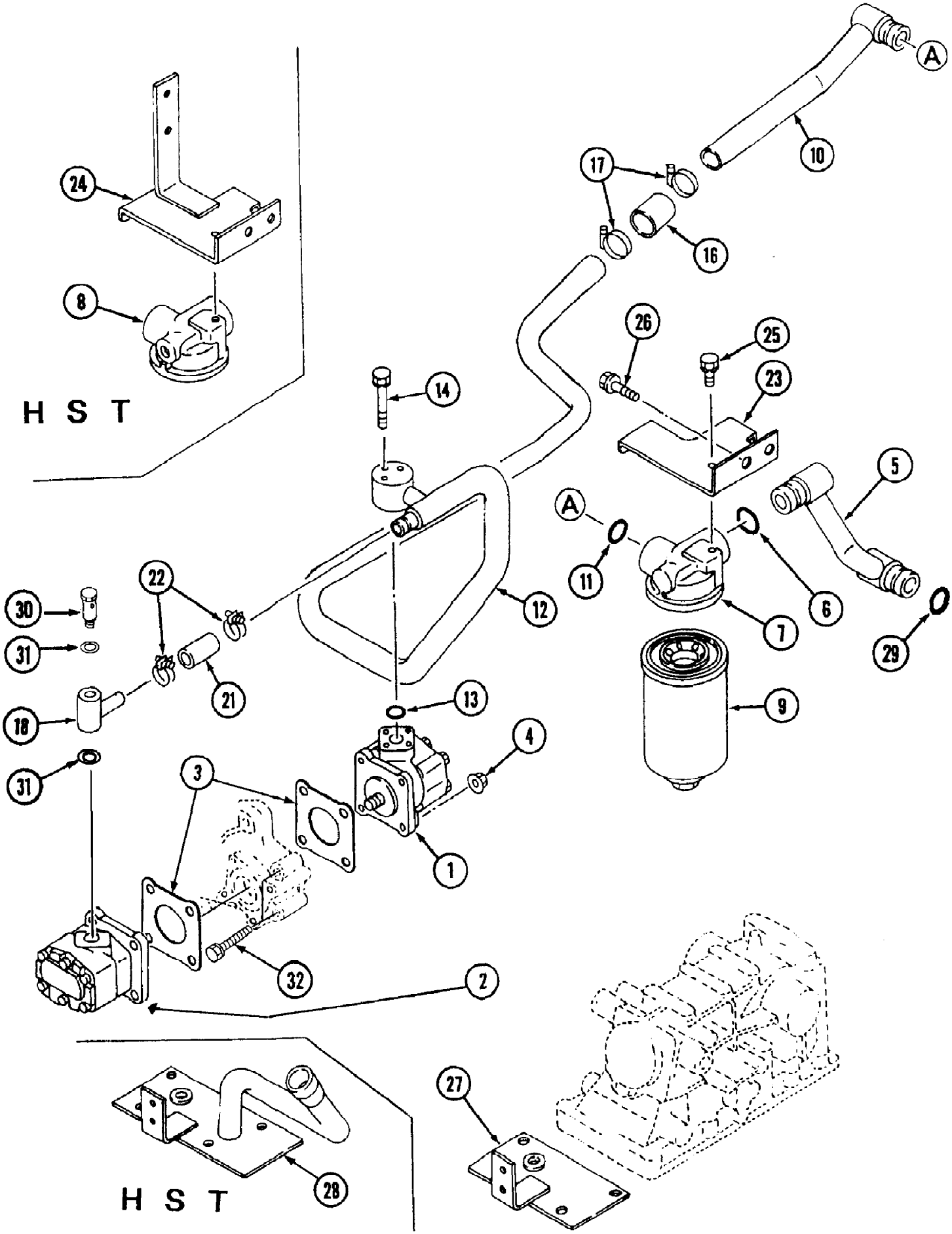

www.mymowerparts.com

For Discount Cub Cadet Parts Call 606-678-9623 or 606-561-4983

Hydraulic Line - Gear Drive (Part 1)

Ref #	Part Number	Qty	S/P/F	Description
1	MA-10352501002	1		Pump, Hydraulic
2	MA-10302539002	1	/P	Pump, Hydraulic
3	MA-67700-20101	2		Packing
4	MA-F3010108001	4		Nut
5	MA-19672503AG0	1		Pipe, A Suction
6	MA-08300100240	1		O-Ring
7	MA-19632506AG0	1		Base, Filter (Gear)
8		1		Base, Filter (HST) Not used on this product
9	MA-11812303000	1		Filter
10	MA-19672511AG0	1		Pipe, B Suction
11	MA-08300100240	1		O-Ring
12	MA-19672512AG1	1		Pipe, C Suction
13	MA-08300100200	1		O-Ring
14	MA-F1440106045	3		Bolt, W/Washer
16	MA-19942526000	1		Hose B
17	MA-HA230102000	2		Clip, Hose
18	MA-19672514AG0	1		Joint
21	MA-19672515000	1		Hose
22	MA-00501100280	2		Clamp, Hose
23	MA-19632516AG0	1		Bracket (Gear)
24		1		Bracket (HST) Not used on this product
25	MA-F1540108020	1		Bolt, W/Washer
26	MA-F1550110020	2		Bolt, W/Washer
27	MA-19632504AG0	1		Cover (Gear)
28		1		Cover (HST) Not used on this product
29	MA-08300100280	1		O-Ring
30	MA-19672516000	1		Bolt, Eye
31	MA-08331002200	2		Seal Washer
32	MA-A0540108070	2		Bolt

www.mymowerparts.com

For Discount Cub Cadet Parts Call 606-678-9623 or 606-561-4983

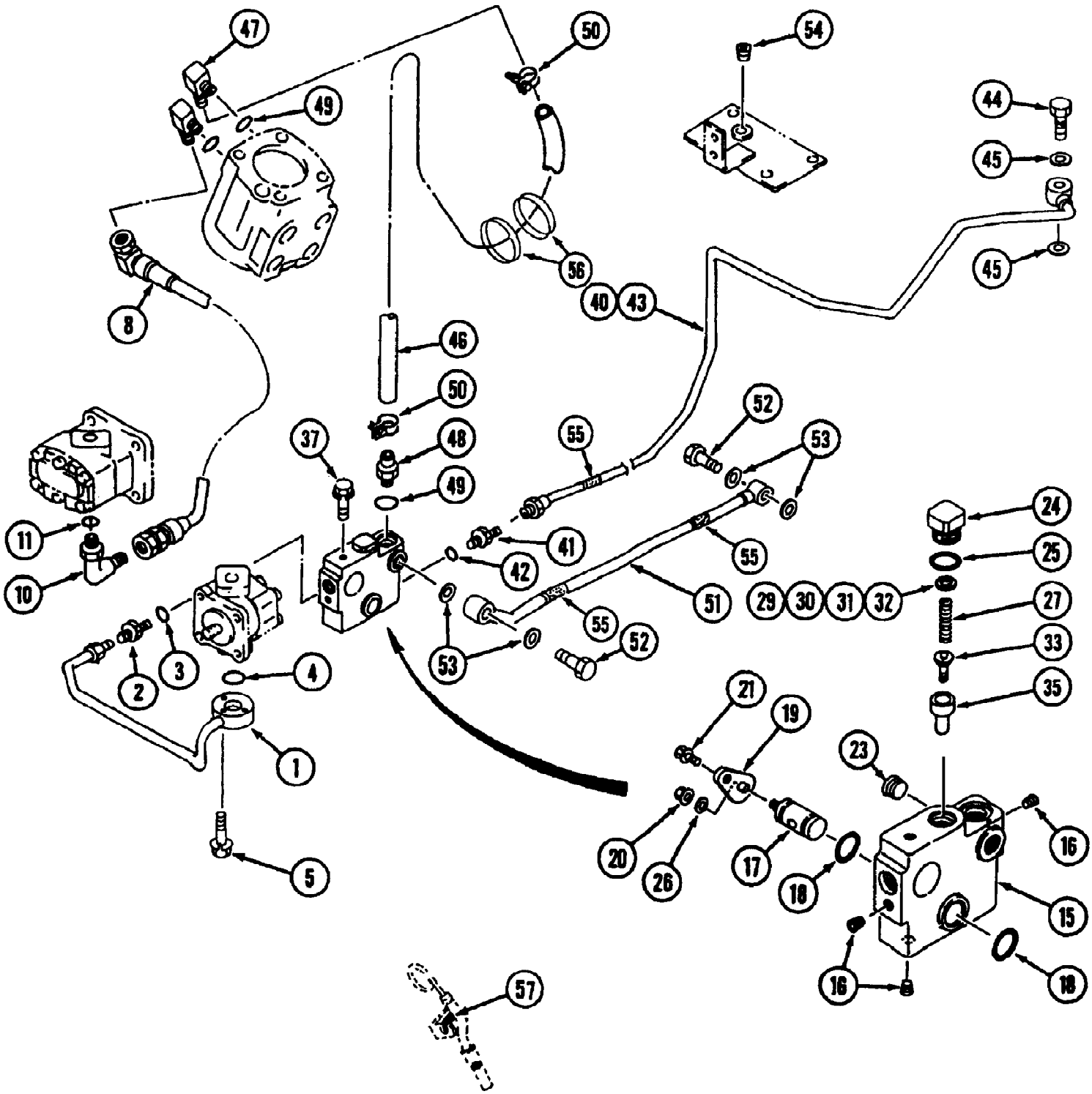

www.mymowerparts.com

For Discount Cub Cadet Parts Call 606-678-9623 or 606-561-4983

Ref #	Part Number	Qty	S/P/F	Description
1	MA-19672520AG1	1		Pipe, A Pre Ass'y.
2	MA-06203112171	1		Body (Nipple)
3	MA-08300100140	1		O-Ring
4	MA-08301100180	1		O-Ring
5	MA-F1440106035	3		Bolt, W/Washer
8	MA-19632522000	1		Hose
10	MA-36949485001	1		Adapter Includes 11
11	MA-08300100140	1		O-Ring
	MA-19632523AG0	1	/P	Block Ass'y. Includes 15-35
15	MA-19632524AG0	1		Block
16	MA-A6010101000	3	/P	Plug
17	MA-19632525000	1		Shaft
18	MA-08300100160	2	/P	O-Ring
19	MA-19632526000	1		Plate
20	MA-F3000106011	1		Nut
21	MA-F1540108016	1		Bolt, W/Washer
23	MA-A6010101700	3		Plug
24	MA-10052405120	1		Plug
25	MA-08300500180	1		O-Ring
	MA-08300500160	1		O-Ring Replaces MA-08300500180 when inventory is depleted.
26	MA-03500141022	1		Washer
27	MA-10052405170	1		Spring
	MA-19632523900	1		Shim Set Includes 29-32
29	MA-10052405130	AR		Shim t=0.1
30	MA-10052405140	AR		Shim t=0.3
31	MA-10052405150	AR		Shim t=1.0
32	MA-10052405160	AR		Shim t=2.0
33	MA-10052405180	1		Poppet
35	MA-10052405191	1	/P	Relief, Housing
37	MA-F1540108016	1		Bolt, W/Washer
40	MA-19632528AG0	1	/P	Pipe, C Pre Ass'y.
41	MA-06203112171	1		Body (Nipple)
42	MA-08301100140	1		O-Ring
43		1		Pipe, D Pre Ass'y. Not used on this product
44	MA-19812453000	1		Bolt, Eye
45	MA-08331001600	2		Seal Washer
46	MA-19682525001	1	S	Hose
47	MA-06319117150	1		Elbow 90 Includes 49
48	MA-06318117150	1		Adapter Includes 49
49	MA-08301100140	2		O-Ring
50	MA-00505000280	2		Clip, Hose
51	MA-19632536AG0	1		Pipe G
52	MA-19812453000	2		Bolt, Eye
53	MA-08331001600	4		Seal, Washer
54	MA-A6010101700	1		Plug
55	MA-11352474000	3		Pipe
56	MA-00511070070	2		Band, Wire
57	MA-27550641000	1		Rubber

www.mymowerparts.com

For Discount Cub Cadet Parts Call 606-678-9623 or 606-561-4983

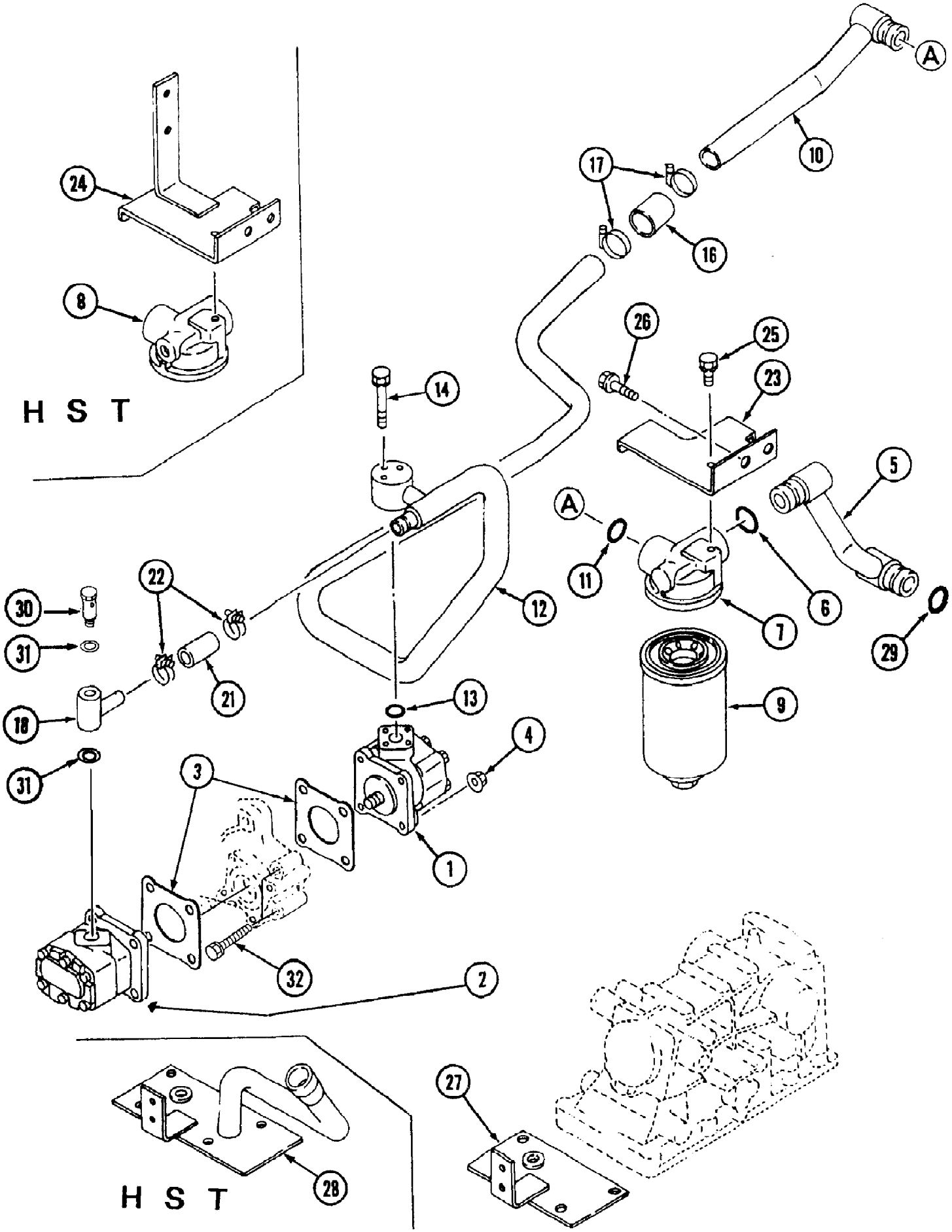

www.mymowerparts.com

For Discount Cub Cadet Parts Call 606-678-9623 or 606-561-4983

Ref #	Part Number	Qty	S/P/F	Description
1	MA-10352501002	1		Pump, Hydraulic
2	MA-10302539002	1	/P	Pump, Hydraulic
3	MA-67700-20101	2		Packing
4	MA-F3010108001	4		Nut
5	MA-19672503AG0	1		Pipe, A Suction
6	MA-08300100240	1		O-Ring
7		1		Base, Filter (Gear) Not used on this product
8	MA-19632507AG0	1		Base, Filter (HST)
9	MA-11812303000	1		Filter
10	MA-19672511AG0	1		Pipe, B Suction
11	MA-08300100240	1		O-Ring
12	MA-19672512AG1	1		Pipe, C Suction
13	MA-08300100200	1		O-Ring
14	MA-F1440106045	3		Bolt, W/Washer
16	MA-19942526000	1		Hose B
17	MA-HA230102000	2		Clip, Hose
18	MA-19672514AG0	1		Joint
21	MA-19672515000	1		Hose
22	MA-00501100280	2		Clamp, Hose
23		1		Bracket (Gear) Not used on this product
24	MA-19632517AG0	1		Bracket (HST)
25	MA-F1540108020	1		Bolt, W/Washer
26	MA-F1550110020	2		Bolt, W/Washer
27		1		Cover (Gear) Not used on this product
28	MA-19632505AG0	1		Cover (HST)
29	MA-08300100280	1		O-Ring
30	MA-19672516000	1		Bolt, Eye
31	MA-08331002200	2		Seal Washer
32	MA-A0540108070	2		Bolt

www.mymowerparts.com

For Discount Cub Cadet Parts Call 606-678-9623 or 606-561-4983

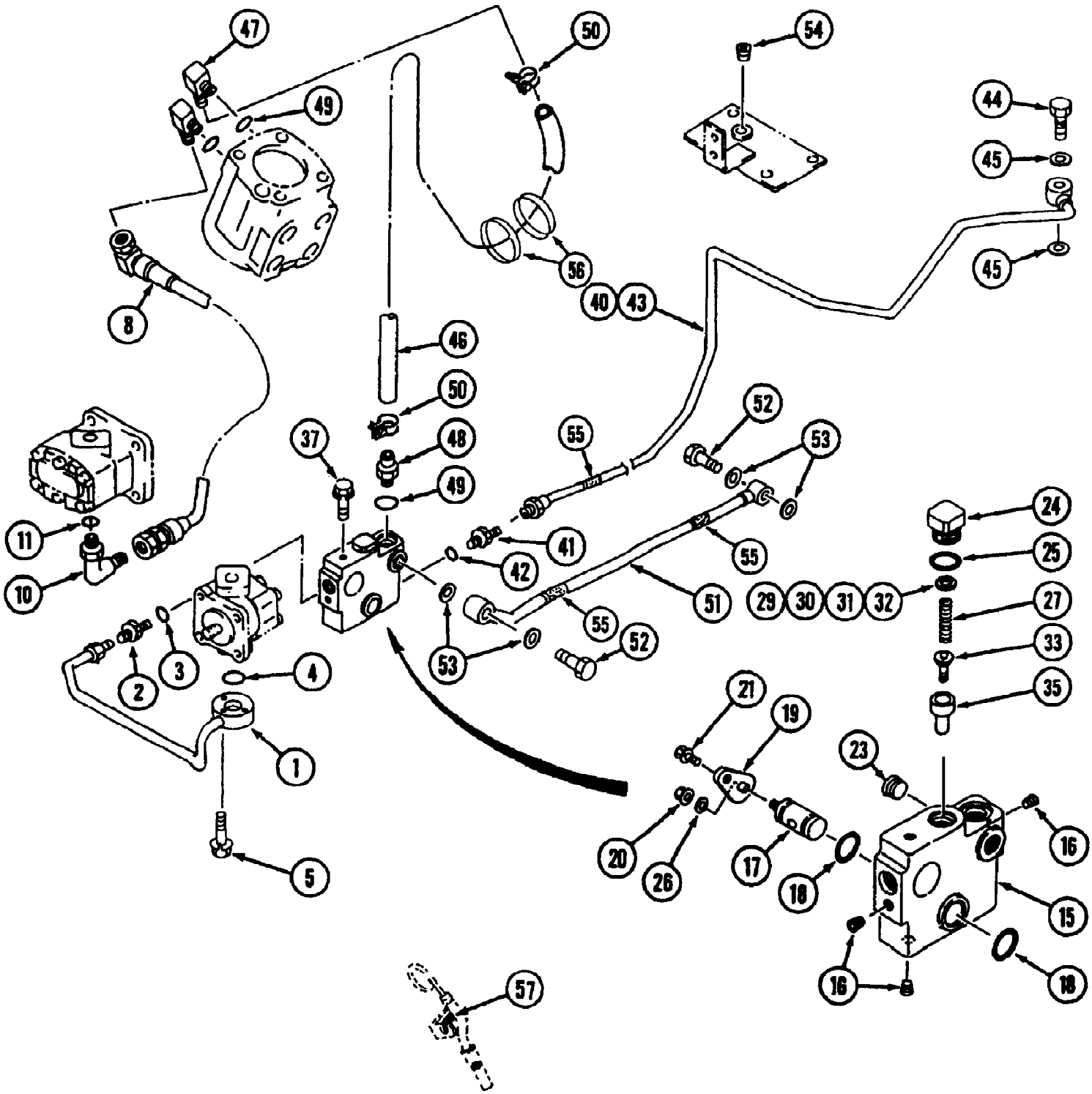

www.mymowerparts.com

For Discount Cub Cadet Parts Call 606-678-9623 or 606-561-4983

Ref #	Part Number	Qty	S/P/F	Description
1	MA-19672520AG1	1		Pipe, A Pre Ass'y.
2	MA-06203112171	1		Body (Nipple)
3	MA-08300100140	1		O-Ring
4	MA-08301100180	1		O-Ring
5	MA-F1440106035	3		Bolt, W/Washer
8	MA-19632522000	1		Hose
10	MA-36949485001	1		Adapter Includes 11
11	MA-08300100140	1		O-Ring
	MA-19632523AG0	1	/P	Block Ass'y. Includes 15-35
15	MA-19632524AG0	1		Block
16	MA-A6010101000	3	/P	Plug
17	MA-19632525000	1		Shaft
18	MA-08300100160	2	/P	O-Ring
19	MA-19632526000	1		Plate
20	MA-F3000106011	1		Nut
21	MA-F1540108016	1		Bolt, W/Washer
23	MA-A6010101700	3		Plug
24	MA-10052405120	1		Plug
25	MA-08300500180	1		O-Ring
	MA-08300500160	1		O-Ring Replaces MA-08300500180 when inventory is depleted.
26	MA-03500141022	1		Washer
27	MA-10052405170	1		Spring
	MA-19632523900	1		Shim Set Includes 29-32
29	MA-10052405130	AR		Shim t=0.1
30	MA-10052405140	AR		Shim t=0.3
31	MA-10052405150	AR		Shim t=1.0
32	MA-10052405160	AR		Shim t=2.0
33	MA-10052405180	1		Poppet
35	MA-10052405191	1	/P	Relief, Housing
37	MA-F1540108016	1		Bolt, W/Washer
40		1		Pipe, C Pre Ass'y. Not used on this product
41	MA-06203112171	1		Body (Nipple)
42	MA-08301100140	1		O-Ring
43	MA-19632530AG0	1		Pipe, D Pre Ass'y.
44	MA-19812453000	1		Bolt, Eye
45	MA-08331001600	2		Seal Washer
46	MA-19682525001	1	S	Hose
47	MA-06319117150	1		Elbow 90 Includes 49
48	MA-06318117150	1		Adapter Includes 49
49	MA-08301100140	2		O-Ring
50	MA-00505000280	2		Clip, Hose
51	MA-19632536AG0	1		Pipe G
52	MA-19812453000	2		Bolt, Eye
53	MA-08331001600	4		Seal, Washer
54	MA-A6010101700	1		Plug
55	MA-11352474000	3		Pipe
56	MA-00511070070	2		Band, Wire
57	MA-27550641000	1		Rubber

www.mymowerparts.com

For Discount Cub Cadet Parts Call 606-678-9623 or 606-561-4983

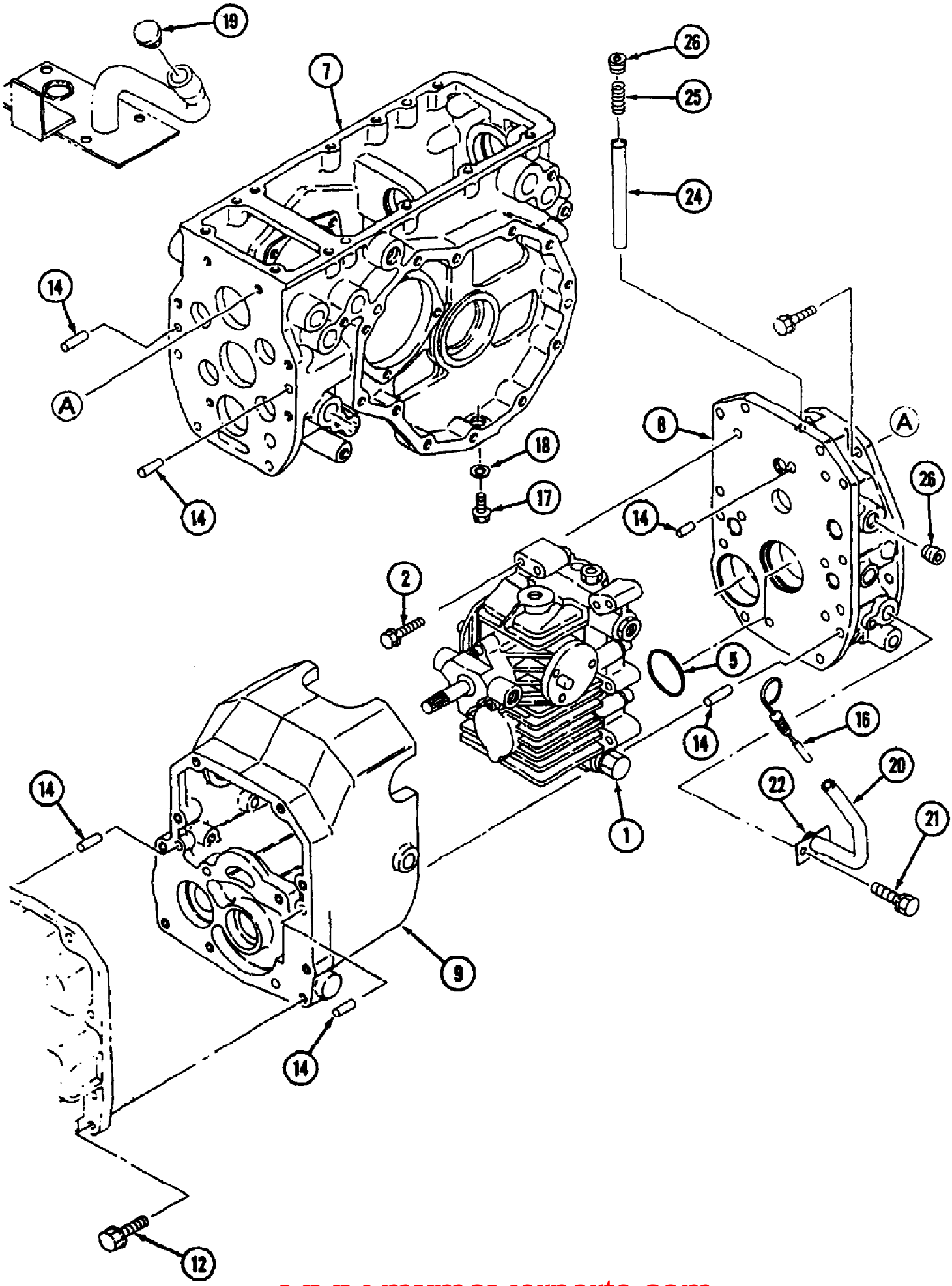

www.mymowerparts.com

For Discount Cub Cadet Parts Call 606-678-9623 or 606-561-4983

Ref #	Part Number	Qty	S/P/F	Description
1	MA-19631301000	1	/P	Hydrostatic Unit
2	MA-F1550110055	6		Bolt
5	MA-08300500560	1		O-Ring
7	MA-19631211AG1	1		Case, T/M
8	MA-19631302AG0	1	/P	Case, Center
9	MA-19631303AG1	1		Case, HST
12	MA-F1550110035	26		Bolt
14	MA-05401010020	6		Pin, Dowel
16	MA-19081017001	1		Gauge, Oil
17	MA-F5000-16000	2		Plug
18	MA-08331001600	2		Seal, Washer
19	MA-11911211000	1		Cap
20	MA-19631331AG0	1		Pipe, Gauge
21	MA-F1550110020	1		Bolt
22	MA-08300100120	1	S	O-Ring
24	MA-19631332000	1		Pipe
25	MA-35232746000	1		Spring
26	MA-A6010A01700	2		Plug

www.mymowerparts.com

For Discount Cub Cadet Parts Call 606-678-9623 or 606-561-4983

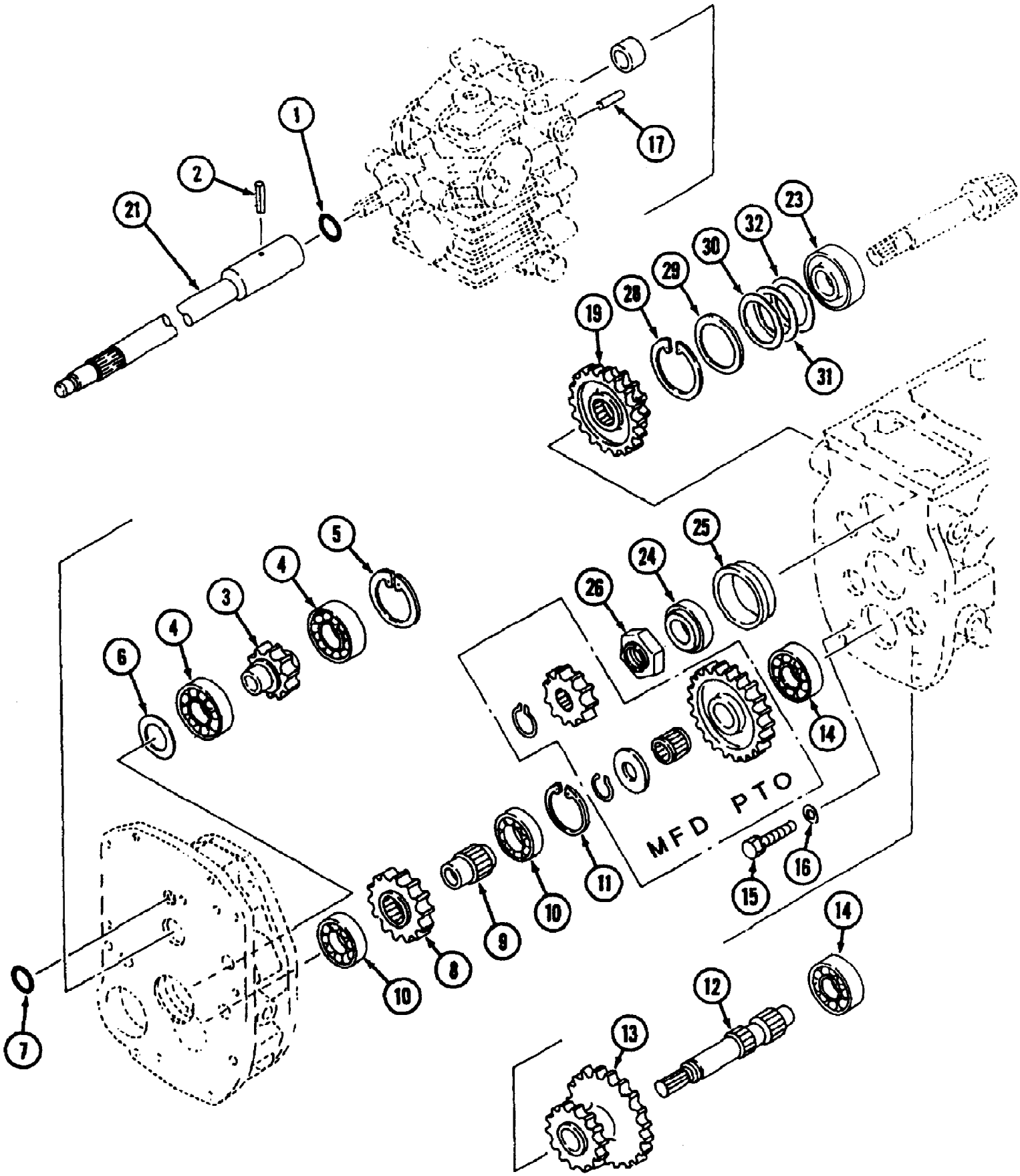

www.mymowerparts.com

For Discount Cub Cadet Parts Call 606-678-9623 or 606-561-4983

Ref #	Part Number	Qty	S/P/F	Description
1	MA-08301100200	1		O-Ring
2	MA-05500006036	1		Pin, Spring
3	MA-19631306000	1		Gear,19T
4	MA-07500062050	2		Bearing
5	MA-07410005201	1	/P	Ring
6	MA-07300005210	1		Liner
7	MA-08301100140	1		O-Ring
8	MA-19631307000	1		Gear, 23T
9	MA-19631308000	1		Boss, Spline
10	MA-07500060050	2		Bearing
11	MA-07410004701	1	/P	Ring
12	MA-19631309000	1		Shaft, Sub
13	MA-19631311000	1		Gear, 25-37T
14	MA-07500063040	2		Bearing
15	MA-F1550110020	1		Bolt
16	MA-03500161032	1		Washer
17	MA-05400101020	1		Pin, Dowel
19	MA-19631312000	1		Gear, 19-32T
21	MA-19631305000	1		Shaft, Main
23	MA-19631256000	1		Bearing
24	MA-07700130205	1		Bearing
25	MA-11351302011	1		Holder
26	MA-11741273000	1		Nut (M25)
28	MA-11351322000	1		Ring, Snap
29	MA-11351317011	1		Shim
	MA-10191309000	1		Shim Set Includes 30-32
30	MA-11351315011	AR		Shim t=0.1
31	MA-11351316011	AR		Shim t=0.2
32	MA-11351317011	AR		Shim t=0.5

www.mymowerparts.com

For Discount Cub Cadet Parts Call 606-678-9623 or 606-561-4983

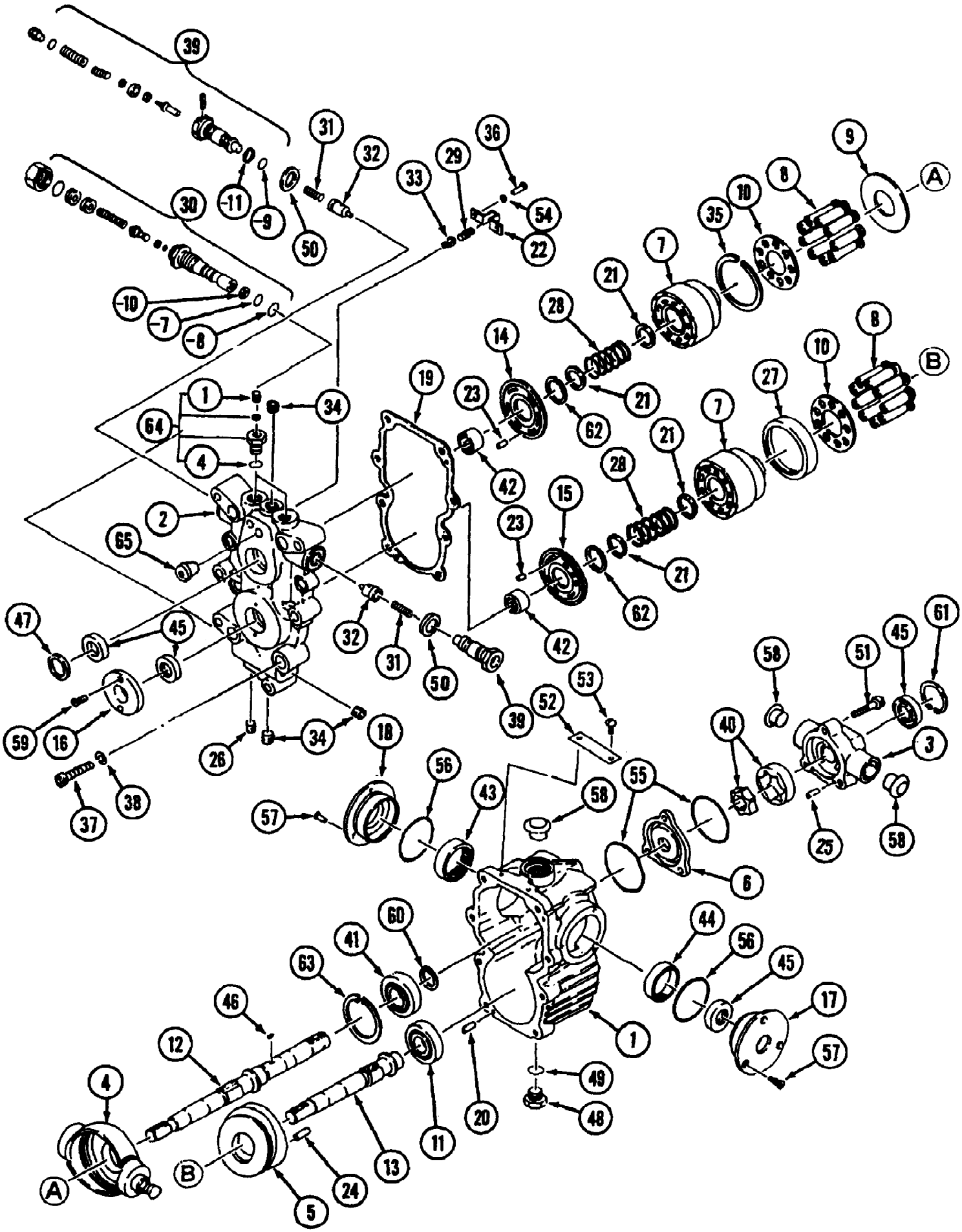

www.mymowerparts.com

For Discount Cub Cadet Parts Call 606-678-9623 or 606-561-4983

Ref #	Part Number	Qty	S/P/F	Description
1	MA-19631301110	1		Case
2	MA-19631301120	1		Block Port
3		1		Charge Pump Case
4	MA-19631301170	1		Swash Plate
5		1		Swash Plate
6	MA-19631301210	1		Plate
7		2		Cylinder Block
8		18		Piston S/A
9	MA-19631301230	1		Plate, Thrust
10	MA-19631301190	2		Plate, Retainer
11	MA-19631301240	1		Bearing, Ball
12	MA-19631301250	1		Shaft
13	MA-19631301260	1		Shaft
14	MA-19631301270	1		Plate, Valve
15	MA-19631301280	1		Plate, Valve
16	MA-19631301290	1		Flange
17		1		Cover
18		1		Cover B
19	MA-19631301340	1		Gasket
20	MA-19631301360	2		Pin
21		4		Holder, Spring
22	MA-19631301370	1		Holder, Spring
23	MA-19631301380	2		Pin
24	MA-19631301390	1		Pin
25	MA-19631301410	2		Pin
26	MA-19631301420	1		Plug
27		1		Holder, Retainer
28		2		Spring
29	MA-19631301430	1		Spring
30	MA-19631301440	1		Valve S/A Includes 30-7,30-8,30-10
30-7	MA-08300100120	1	S	O-Ring
30-8	MA-08301100180	2		O-Ring
30-10	MA-08320100120	1		Ring, Back Up
31	MA-19631301450	2		Spring
32	MA-19631301460	2		Poppet
33	MA-19631301470	1		Valve
34	MA-19631301480	3		Plug
35	MA-19631301490	1		Ring, Snap
36	MA-A5440706010	2		Bolt
37	MA-A5440710040	8		Bolt
38	MA-A3600101002	8	/P	Washer, Spring
39	MA-19631301510	2		Valve S/A Includes 39-9,39-11
39-9	MA-08300100140	2		O-Ring
39-11	MA-08320100140	2		Ring, Back Up
40		1		Trochoid Rotor
41	MA-19631301520	1		Bearing, Ball
42	MA-19631301530	2		Bearing, Needle
43		1		Bearing, Needle
44		1		Bush
45	MA-19631301140	4		Seal, Oil
46	MA-19631301150	1		Key
47	MA-19631301610	1		Bush
48	MA-19631301620	1		Plug

www.mymowerparts.com

For Discount Cub Cadet Parts Call 606-678-9623 or 606-561-4983

Ref #	Part Number	Qty	S/P/F	Description
49	MA-08301100140	1		O-Ring
50	MA-19631301350	2		Washer, Seal
51	MA-A5440708035	3		Bolt
52		1		Plate, Name
53		2		Screw, Drive
54	MA-A3600100602	2		Washer, Spring
55	MA-19631301160	2		O-Ring
56	MA-08300200550	2		O-Ring
57	MA-A2220105012	6		Screw
58	MA-19631301550	3		Plug
59	MA-A2220105014	2		Screw
60	MA-07400002500	1	/P	Ring, Snap
61	MA-07410003500	1		Ring, Snap
62		2		Ring, Snap
63	MA-07410005200	1	/P	Ring, Snap
64	MA-19631301560	2		Plug S/A Includes 64-1, 64-4
64-1	MA-19631301580	2		Screw
64-4	MA-08301100140	2		O-Ring
65	MA-19631301570	1		Plug
	MA-19631301330	1	F	Seal Kit
	MA-19631301220	1	F	Cylinder Block (P) Ass'y.
	MA-19631301180	1	F	Cylinder Block (M) Ass'y.
	MA-19631301130	1	F	Charge Pump Ass'y.
	MA-19631301310	1	F	Cover A
	MA-19631301320	1	F	Cover B

www.mymowerparts.com

For Discount Cub Cadet Parts Call 606-678-9623 or 606-561-4983

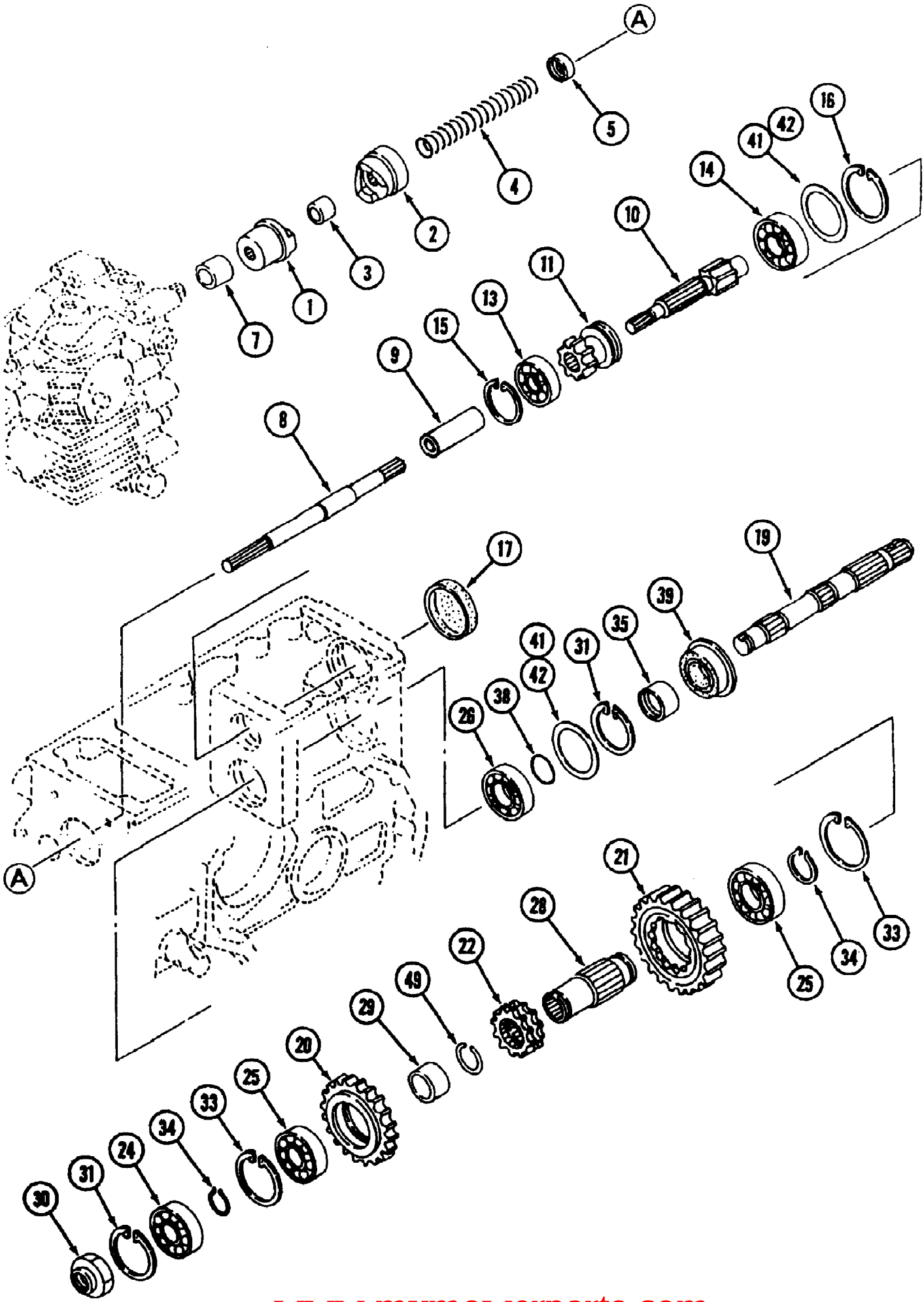

www.mymowerparts.com

For Discount Cub Cadet Parts Call 606-678-9623 or 606-561-4983

Ref #	Part Number	Qty	S/P/F	Description
1	MA-19811603000	1		Clutch A
2	MA-19811604001	1		Clutch B
3	MA-07961016150	1		Bushing
4	MA-19811605000	1		Spring
5	MA-19631261000	1		Collar
7	MA-36904608000	1		Collar
8	MA-19631241001	1		Shaft
9	MA-10251922000	1	S	Collar
10	MA-19631243000	1		Shaft, PTO Drive
11	MA-19631244000	1		Gear,17T
13	MA-07500063040	1		Bearing
14	MA-07500063050	1		Bearing
15	MA-07410005201	1	/P	Ring
16	MA-07410006200	1		Ring
17	MA-08340062100	1		Seal Cap
19	MA-19631246000	1		Shaft, PTO
20	MA-19631247000	1		Gear, 41T
21	MA-19631248000	1		Gear, 48T
22	MA-19631249000	1		Gear, Clutch
24	MA-07500063050	1		Bearing
25	MA-07500062070	2		Bearing
26	MA-07500062060	1		Bearing
28	MA-19631251000	1		Boss, Spline
29	MA-19631252000	1		Collar
30	MA-11741273000	1		Nut (M25)
31	MA-07410006200	2		Ring
33	MA-07410007201	2		Ring
34	MA-07400003500	2	S	Ring
35	MA-10251405000	1		Bushing
38	MA-08300100300	1		O-Ring
39	MA-10211314000	1		Seal, Oil
	MA-10211318000	1		Liner Set Includes 41-42
41	MA-07300006201	AR		Liner t=0.15
42	MA-07300006204	AR		Liner t=0.4
49	MA-19631253000	1		Ring

www.mymowerparts.com

For Discount Cub Cadet Parts Call 606-678-9623 or 606-561-4983

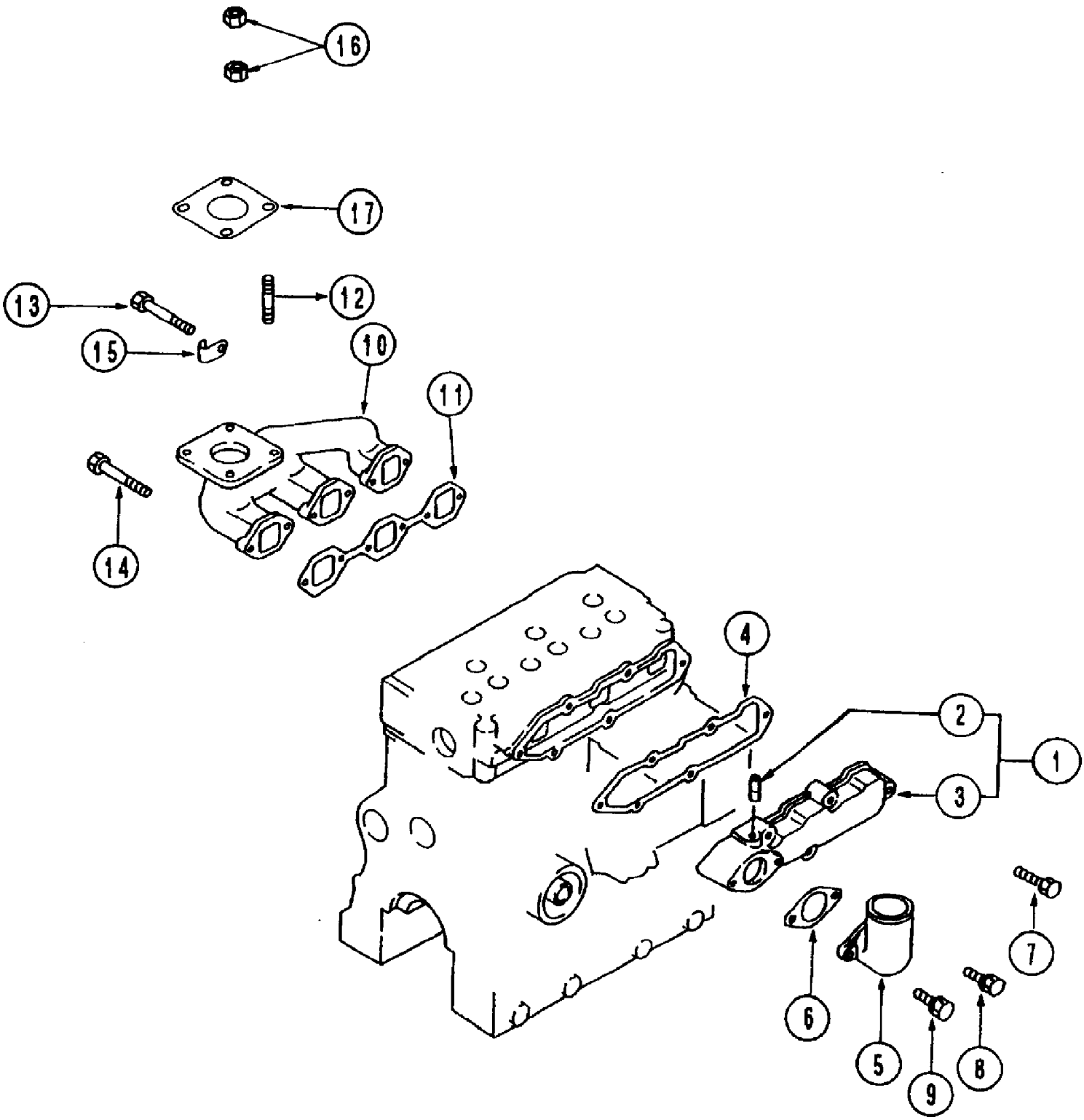

www.mymowerparts.com

For Discount Cub Cadet Parts Call 606-678-9623 or 606-561-4983

Ref #	Part Number	Qty	S/P/F	Description
1	MA-31B30-10010	1		Cover Ass'y., Inlet
2		1		Pipe
3		1		Cover Inlet
4	MA-31B30-00902	1		Gasket, Inlet
5	MA-31A30-00300	1		Pipe, Inlet
6	MA-31A30-00801	1		Gasket, Inlet
7	MA-F1540108035	5		Bolt, W/Washer
8	MA-F1540108020	1		Bolt, W/Washer
9	MA-F1805-08065	1	/P	Bolt, W/Washer
10	MA-31B32-00100	1		Manifold, Exhaust
11	MA-31B32-01200	1		Gasket, Exhaust
12	MA-MF401936	4	S	Stud
13	MA-F1035-08020	4	/P	Bolt
14	MA-F1035-08055	2		Bolt
15	MA-31A32-02100	1		Clamp
16	MA-MM436867	8		Nut
17	MA-30A30-00200	1		Gasket

www.mymowerparts.com

For Discount Cub Cadet Parts Call 606-678-9623 or 606-561-4983

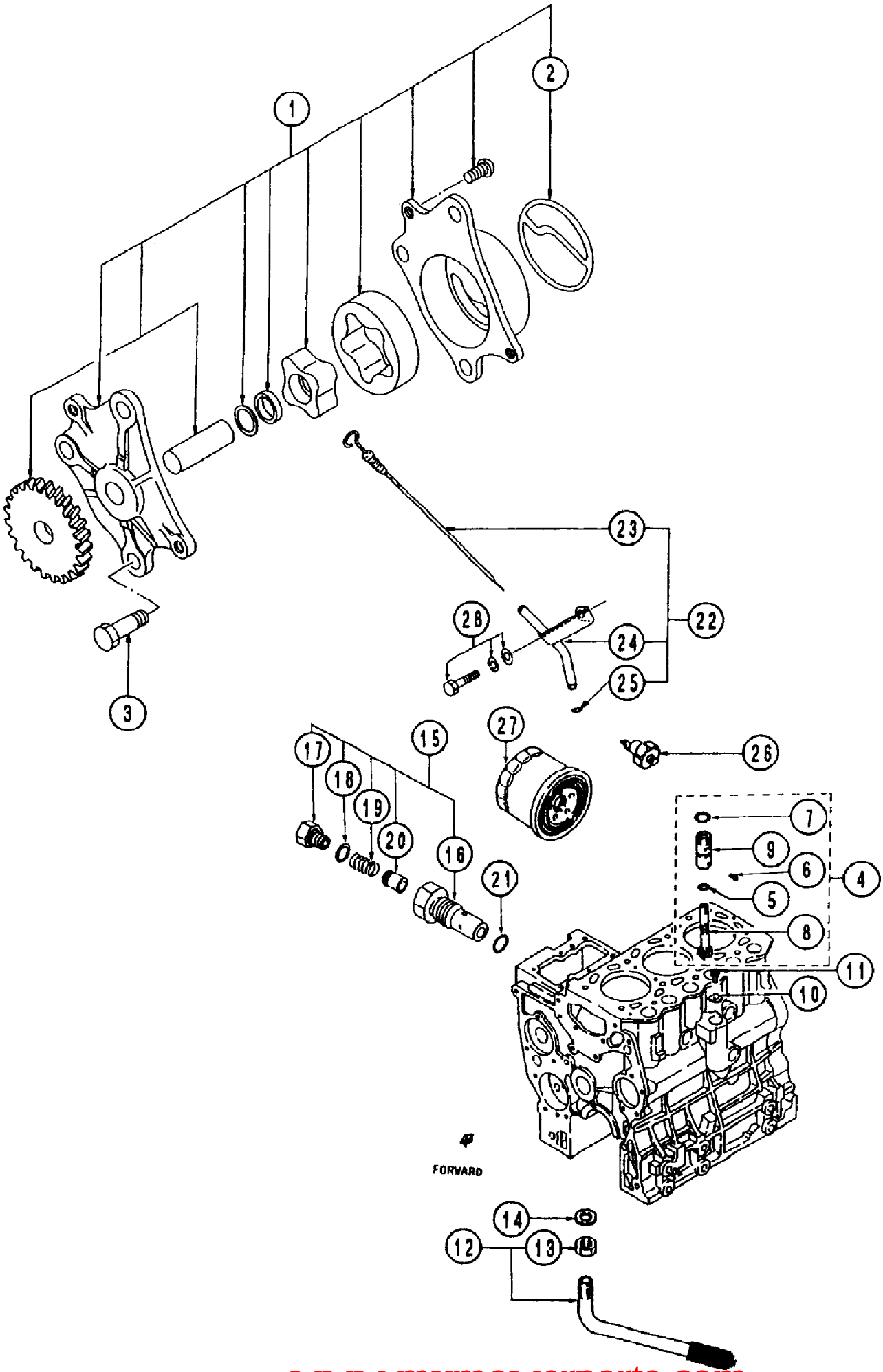

www.mymowerparts.com

For Discount Cub Cadet Parts Call 606-678-9623 or 606-561-4983

Ref #	Part Number	Qty	S/P/F	Description
1	MA-31A35-30010	1		Pump Ass'y, Oil
2	MA-31A35-02300	1		Packing, Body
3	MA-F1035-08022	3		Bolt
4	MA-MM430598	1	S	Driven Unit
5	MA-MD701788	1		O-Ring
6	MA-MF472535	1	S	Pin, Spring
7	MA-MF520012	1	S	O-Ring
8	MA-MM407171	1	S	Gear
9	MA-MM430419	1	/P	Sleeve
10	MA-MD701789	1		Plate
11	MA-F1440106012	1		Bolt, W/Washer
12	MA-31A35-05040	1		Strainer Ass'y
13	MA-MF430729	1		Nut, Jam
14	MA-MF660036	1		Gasket
15	MA-32A36-0510	1		Valve Ass'y., Relief
16		1		Housing, Valve
17		1		Plug
18		1		Gasket
19		1		Spring, Relief
20		1		Plunger, Relief
21	MA-F4202-22000	1		Gasket
22		1		Gage & Guide Ass'y. Furnish Component Parts
23	MA-31B42-01500	1		Gauge Ass'y., Oil Level
24	MA-31B42-01600	1		Guide, Oil Level
25	MA-MF520004	1	S	O-Ring
26	MA-31A90-00300	1		Switch, Oil
27	MA-MD134953	1	S	Filter Ass'y.
28	MA-F1540108016	1		Bolt, W/Washer

www.mymowerparts.com

For Discount Cub Cadet Parts Call 606-678-9623 or 606-561-4983

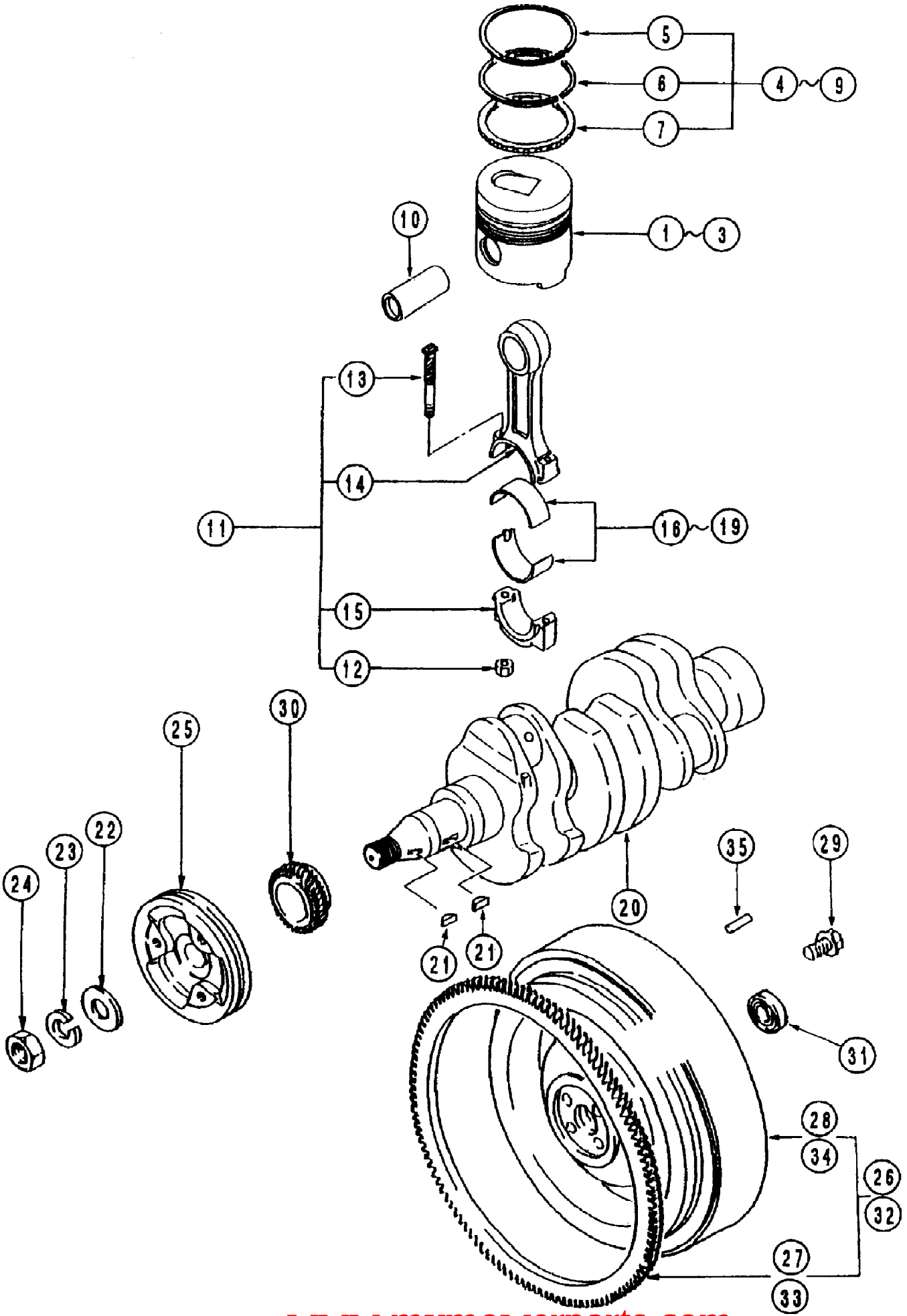

www.mymowerparts.com

For Discount Cub Cadet Parts Call 606-678-9623 or 606-561-4983

Ref #	Part Number	Qty	S/P/F	Description
1	MA-31A17-11100	3		Piston
2	MA-31A17-11200	3		Piston O.S. 0.25
3	MA-31A17-11300	3		Piston O.S. 0.50
4	MA-MM433921	3	S	Ring Set,Piston STD
5		3		Ring,Piston No.1
6		3		Ring,Piston No.2
7		3		Ring Ass'y.,Oil
8	MA-MM437404	3	/P	Ring Set,Piston O.S. 0.25
9	MA-MM437405	3		Ring Set,Piston O.S. 0.50
10	MA-31A17-10600	3	S	Pin, Piston
11	MA-31A19-10021	3		Rod Ass'y.,Connecting
12	MA-MD006704	6		Nut
13	MA-MD021105	6		Bolt, Connecting
14		3		Con-Rod
15		3		Cap,Connecting Rod
16	MA-MM437305	3	S	Metal Set, Con-Rod STD
17	MA-30A19-00010	3	S	Metal Set, Con-Rod U.S. 0.25
18	MA-30A19-00020	3		Metal Set, Con-Rod U.S. 0.50
19	MA-30A19-00030	3		Metal Set, Con-Rod U.S. 0.75
20	MA-31B20-00100	1		Crankshaft
21	MA-MF476215	2		Key, Woodruff
22	MA-MF450010	1		Washer, Plain
23	MA-MF450410	1	S	Washer, Spring
24	MA-MF430126	1	S	Nut
25	MA-31B20-02100	1	S	Pulley, Crankshaft
26	MA-31B21-01050	1		Flywheel Sub Ass'y
27	MA-MD040556	1		Gear,Ring
28		1		Flywheel
29	MA-MD952231	4	S	Bolt
30	MA-31A23-01302	1		Gear,Crankshaft
31	MA-MD002613	1	S	Bearing, Ball
32		1		Flywheel Sub Ass'y Not used on this product
33		1		Gear,Ring Not used on this product
34		1		Flywheel Not used on this product
35		1		Pin, Dowel

www.mymowerparts.com

For Discount Cub Cadet Parts Call 606-678-9623 or 606-561-4983

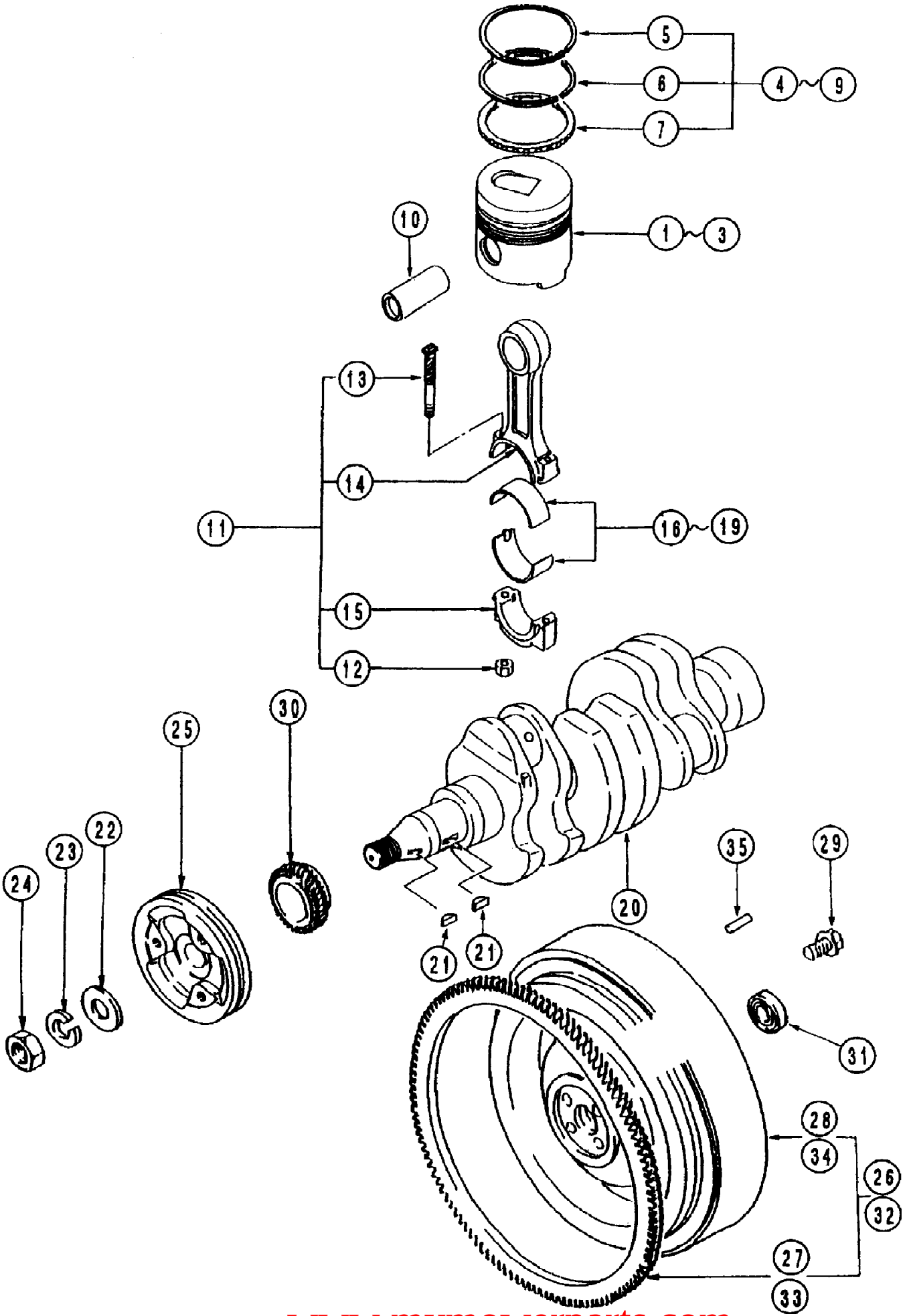

www.mymowerparts.com

For Discount Cub Cadet Parts Call 606-678-9623 or 606-561-4983

Ref #	Part Number	Qty	S/P/F	Description
1	MA-31A17-11100	3		Piston
2	MA-31A17-11200	3		Piston O.S. 0.25
3	MA-31A17-11300	3		Piston O.S. 0.50
4	MA-MM433921	3	S	Ring Set,Piston STD
5		3		Ring,Piston No.1
6		3		Ring,Piston No.2
7		3		Ring Ass'y.,Oil
8	MA-MM437404	3	/P	Ring Set,Piston O.S. 0.25
9	MA-MM437405	3		Ring Set,Piston O.S. 0.50
10	MA-31A17-10600	3	S	Pin, Piston
11	MA-31A19-10021	3		Rod Ass'y.,Connecting
12	MA-MD006704	6		Nut
13	MA-MD021105	6		Bolt, Connecting
14		3		Con-Rod
15		3		Cap,Connecting Rod
16	MA-MM437305	3	S	Metal Set, Con-Rod STD
17	MA-30A19-00010	3	S	Metal Set, Con-Rod U.S. 0.25
18	MA-30A19-00020	3		Metal Set, Con-Rod U.S. 0.50
19	MA-30A19-00030	3		Metal Set, Con-Rod U.S. 0.75
20	MA-31B20-00100	1		Crankshaft
21	MA-MF476215	2		Key, Woodruff
22	MA-MF450010	1		Washer, Plain
23	MA-MF450410	1	S	Washer, Spring
24	MA-MF430126	1	S	Nut
25	MA-31B20-02100	1	S	Pulley, Crankshaft
26		1		Flywheel Sub Ass'y Not used on this product
27		1		Gear,Ring Not used on this product
28		1		Flywheel Not used on this product
29	MA-MD952231	4	S	Bolt
30	MA-31A23-01302	1		Gear,Crankshaft
31	MA-MD002613	1	S	Bearing, Ball
32	MA-31B21-02021	1		Flywheel Sub Ass'y
33	MA-MD040556	1		Gear,Ring
34		1		Flywheel
35		1		Pin, Dowel

www.mymowerparts.com

For Discount Cub Cadet Parts Call 606-678-9623 or 606-561-4983

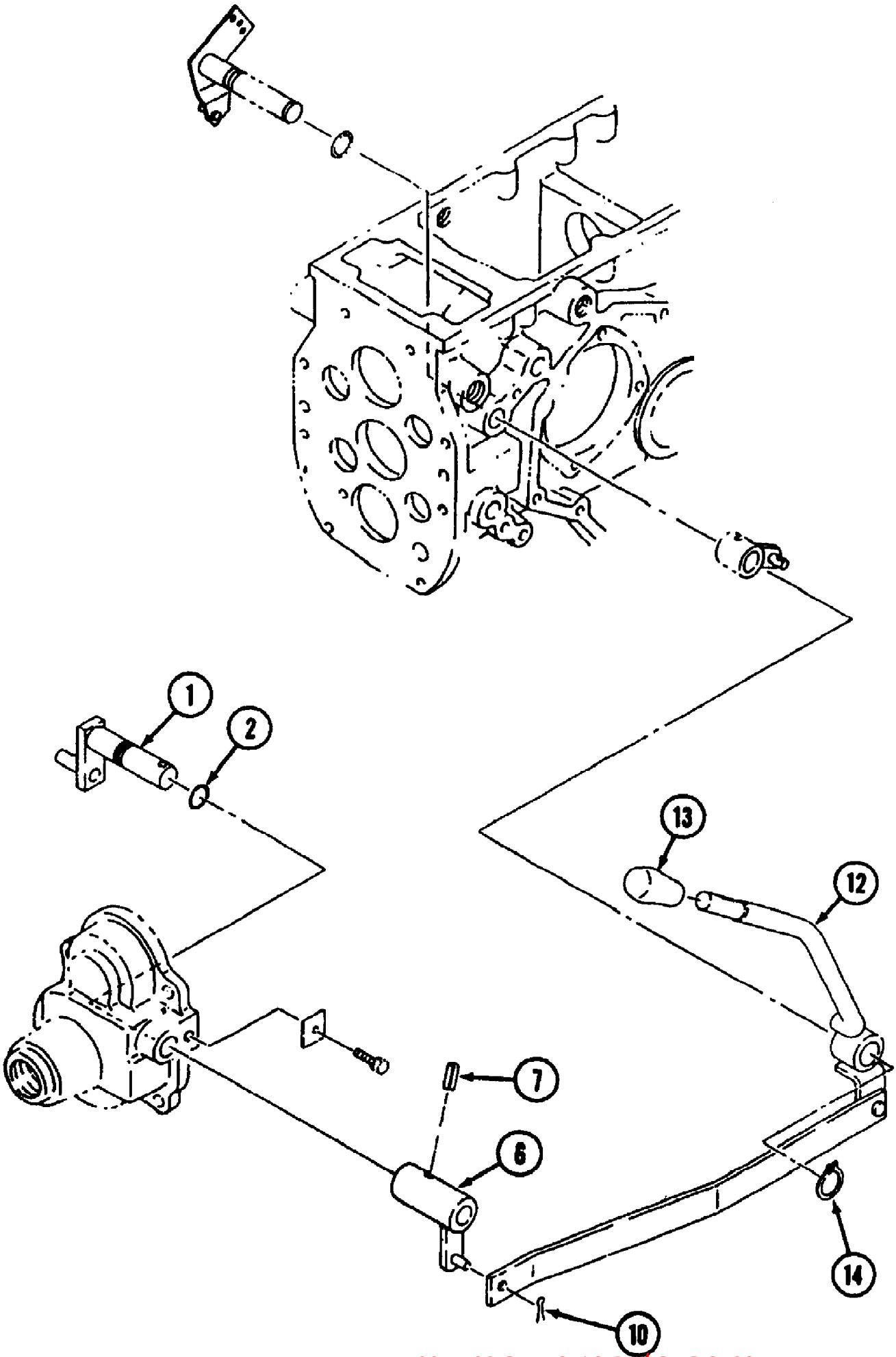

www.mymowerparts.com

For Discount Cub Cadet Parts Call 606-678-9623 or 606-561-4983

Ref #	Part Number	Qty	S/P/F	Description
1	MA-19631851000	1		Shifter, MFD
2	MA-08300100140	1		O-Ring
6	MA-19631853AG0	1		Arm, MFD
7	MA-10191734000	1		Pin, Spring
10	MA-05200125016	1	S	Pin, Split
12	MA-19631855AG0	1		Lever, MFD
13	MA-06960012360	1		Grip
14	MA-07400102000	1		Ring

www.mymowerparts.com

For Discount Cub Cadet Parts Call 606-678-9623 or 606-561-4983

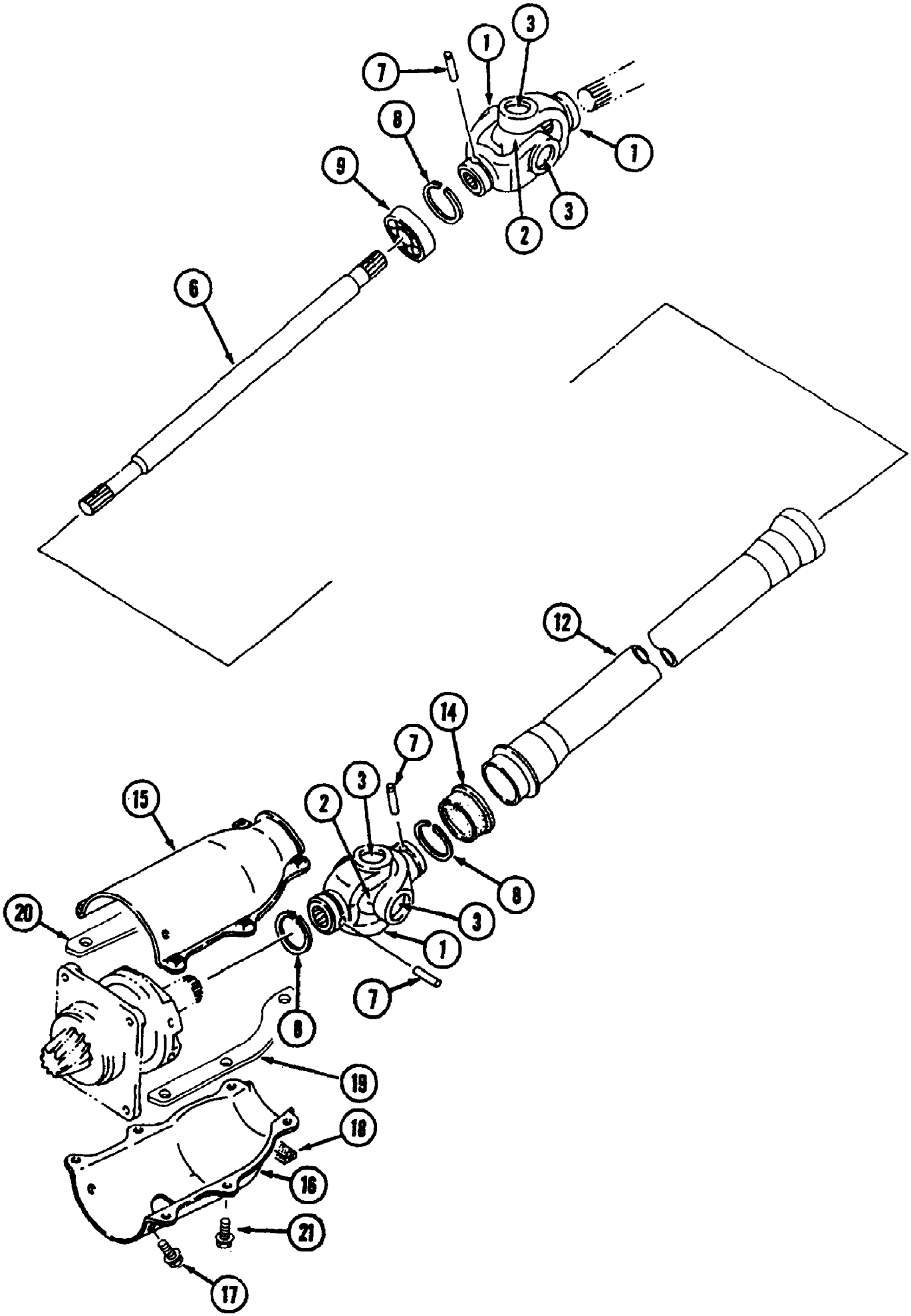

www.mymowerparts.com

For Discount Cub Cadet Parts Call 606-678-9623 or 606-561-4983

Ref #	Part Number	Qty	S/P/F	Description
	MA-10070552000	2		Joint Ass'y. Includes 1-3
1	MA-10070552100	4		Spline, Yoke
2	MA-10070552200	2		Journal Kit
3	MA-07410102000	8	S	Ring, Snap
6	MA-19671912AG0	1		Shaft
7	MA-05401006028	3		Pin, Dowel
8	MA-10070553001	3		Ring, Snap
9	MA-07500560044	1		Bearing
12	MA-19631914AG0	1		Cover
14	MA-19061916000	1		Cushion
15	MA-19671913AG0	1		Cover, Upper
16	MA-19671916AG0	1		Cover, Lower
17	MA-H1440106012	2		Bolt
18	MA-19671917000	1		Cushion
19	MA-19671918AG0	1		Plate
20	MA-19671919AG0	1		Plate
21	MA-H1440106020	6	/P	Bolt

www.mymowerparts.com

For Discount Cub Cadet Parts Call 606-678-9623 or 606-561-4983

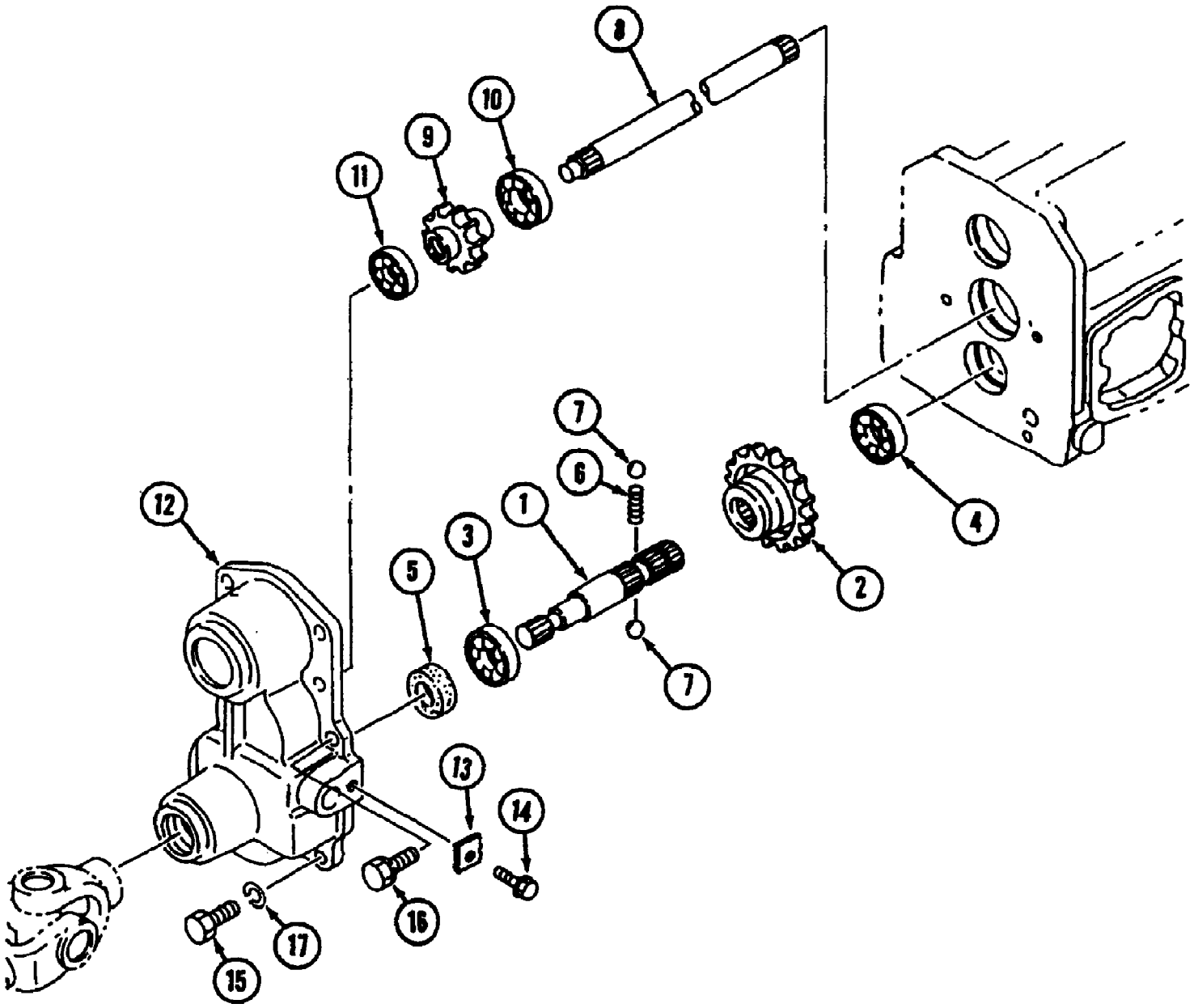

www.mymowerparts.com

For Discount Cub Cadet Parts Call 606-678-9623 or 606-561-4983

Ref #	Part Number	Qty	S/P/F	Description
1	MA-19631918000	1		Shaft
2	MA-19631919000	1		Gear, 32T
3	MA-07500062040	1		Bearing
4	MA-07500063040	1		Bearing
5	MA-08401020407	1		Seal, Oil
6	MA-10301916000	1		Spring
7	MA-08000000800	2		Ball
8	MA-19631921000	1		Shaft
9	MA-19631922000	1		Gear, 26T
10	MA-07500062060	1		Bearing
11	MA-07500062030	1		Bearing
12	MA-19631956AG0	1		Case, MFD
13	MA-10251304000	1		Plate
14	MA-F1540108016	1		Bolt
15	MA-69542-64700	2		Bolt
16	MA-F1550110030	6		Bolt
17	MA-A3600101002	2	/P	Washer

www.mymowerparts.com

For Discount Cub Cadet Parts Call 606-678-9623 or 606-561-4983

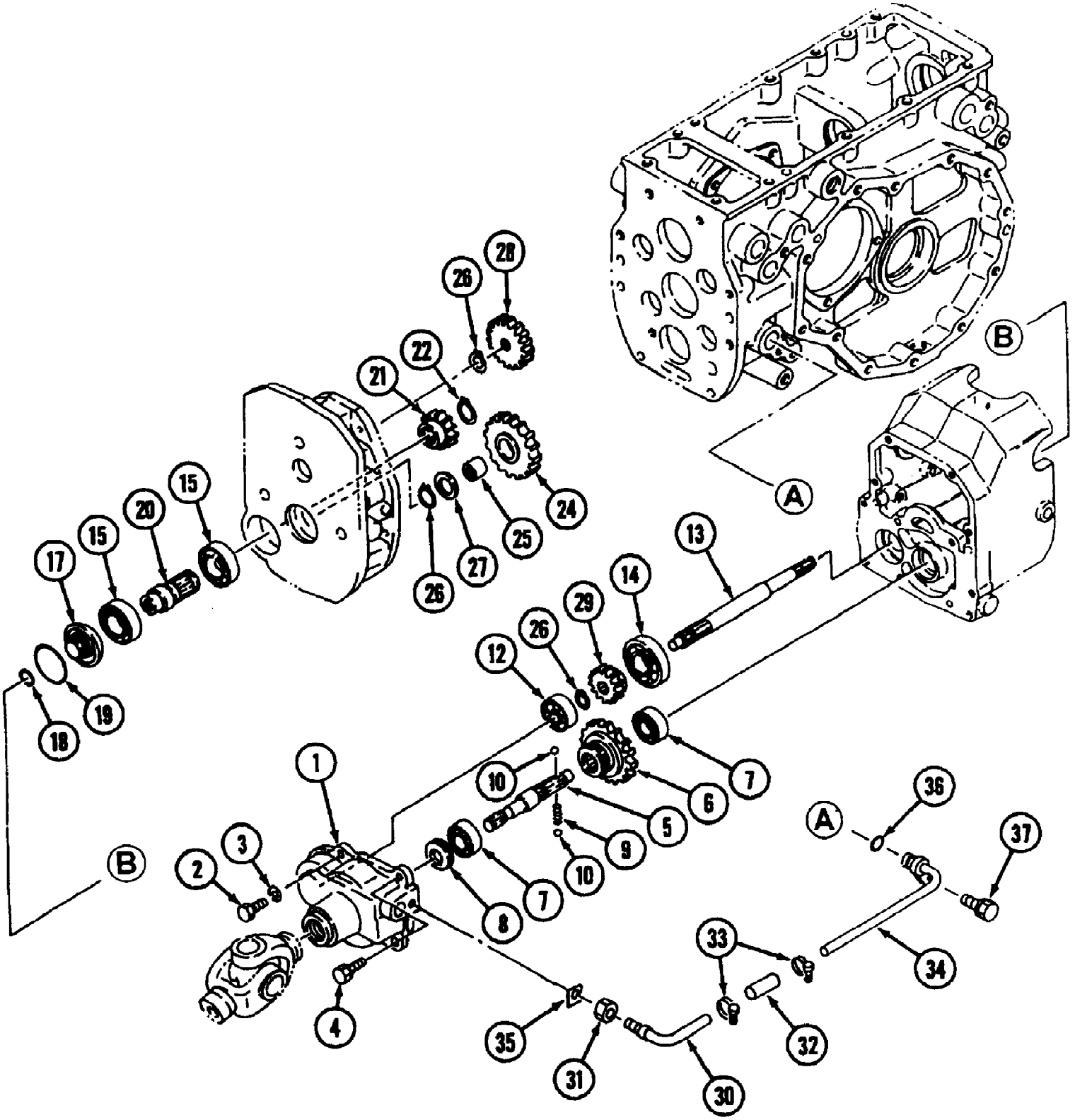

www.mymowerparts.com

For Discount Cub Cadet Parts Call 606-678-9623 or 606-561-4983

Ref #	Part Number	Qty	S/P/F	Description
1	MA-19631917AG0	1		Case, MFD
2	MA-69542-64700	2		Bolt
3	MA-A3600101002	2	/P	Washer
4	MA-F1550110030	2		Bolt
5	MA-19631918000	1		Shaft
6	MA-19631919000	1		Gear, 32T
7	MA-07500062040	2		Bearing
8	MA-08401020407	1		Seal, Oil
9	MA-10301916000	1		Spring
10	MA-08000000800	2		Ball
12	MA-07500062030	1		Bearing
13	MA-19631923000	1		Shaft
14	MA-07500060060	1		Bearing
15	MA-07500062060	2		Bearing
17	MA-19631926000	1		Holder
18	MA-08300500260	1		O-Ring
19	MA-08300500560	1		O-Ring
20	MA-19631927000	1		Joint
21	MA-19631928000	1		Gear, 20T
22	MA-07400003000	1	/P	Ring
24	MA-19631929000	1		Gear, 36T
25	MA-07802202620	1		Bearing
26	MA-07400002000	3		Ring
27	MA-11741299000	1		Spacer
28	MA-19631931000	1		Gear, 20T
29	MA-19631932000	1		Gear, 26T
30	MA-19631971AG0	1		Pipe A
31	MA-A3030112002	1		Nut
32	MA-19631972000	1		Hose
33	MA-00501100200	2		Clamp
34	MA-19631973AG0	1		Pipe B
35	MA-19631974000	1		Plate
36	MA-08301100160	1		O-Ring
37	MA-F1550110020	1		Bolt

www.mymowerparts.com

For Discount Cub Cadet Parts Call 606-678-9623 or 606-561-4983

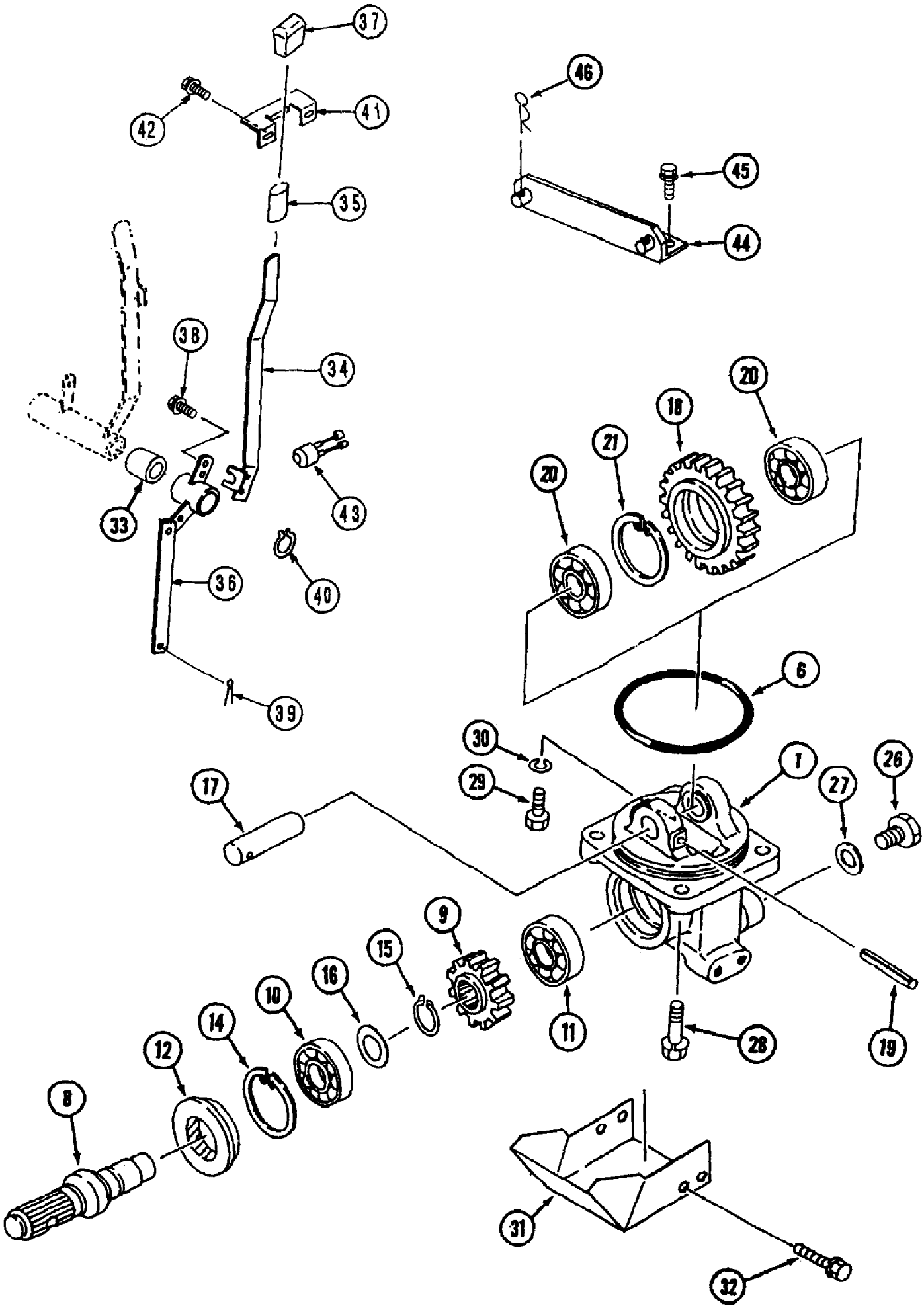

www.mymowerparts.com

For Discount Cub Cadet Parts Call 606-678-9623 or 606-561-4983

Ref #	Part Number	Qty	S/P/F	Description
		1		Mid, PTO Ass'y. Includes 1-27; Furnish Component Parts
1	MA-19631601AG0	1		Case, Mid
6	MA-08300200950	1		O-Ring
8	MA-19631603000	1		Shaft
9	MA-19631604000	1		Gear, 21T
10	MA-07500062050	1		Bearing
11	MA-07500063040	1		Bearing
12	MA-08412355212	1		Seal, Oil
14	MA-07410005201	1	/P	Ring
15	MA-07400002500	1	/P	Ring
16	MA-13521608000	1		Liner
17	MA-19871852000	1		Shaft A
18	MA-19631606000	1		Gear, 35T
19	MA-05500005050	1		Pin, Spring
20	MA-07500063040	2		Bearing
21	MA-07410005201	1	/P	Ring
31	MA-19631607AG0	1		Cover
26	MA-F5000-16000	1		Plug
27	MA-08331001600	1		Seal, Washer
28	MA-F1550110030	3		Bolt
29	MA-69542-64700	1		Bolt
30	MA-A3600101002	1	/P	Washer
32	MA-H1540108016	4		Bolt
33	MA-12181223000	1		Pipe
		1		Lever, Mid Ass'y. Includes 34,35; Furnish Component Parts
34	MA-12181226AG0	1		Lever, Mid PTO
35	MA-19631658000	1		Tube
36	MA-12181227AG0	1		Lever, Mid PTO
37	MA-19061731000	1		Grip
38	MA-H1540108016	2		Bolt
39	MA-05200125016	1	S	Pin, Split
40	MA-07400102000	1		Ring
41	MA-19631659AG0	1		Plate, Mid PTO
42	MA-H1440106016	2	/P	Bolt
43	MA-10253505001	1	/P	Switch
44	MA-19633105000	1		Bracket, Drawbar
45	MA-H1540108020	2		Bolt
46	MA-05210116000	2		Pin, Snap

www.mymowerparts.com

For Discount Cub Cadet Parts Call 606-678-9623 or 606-561-4983

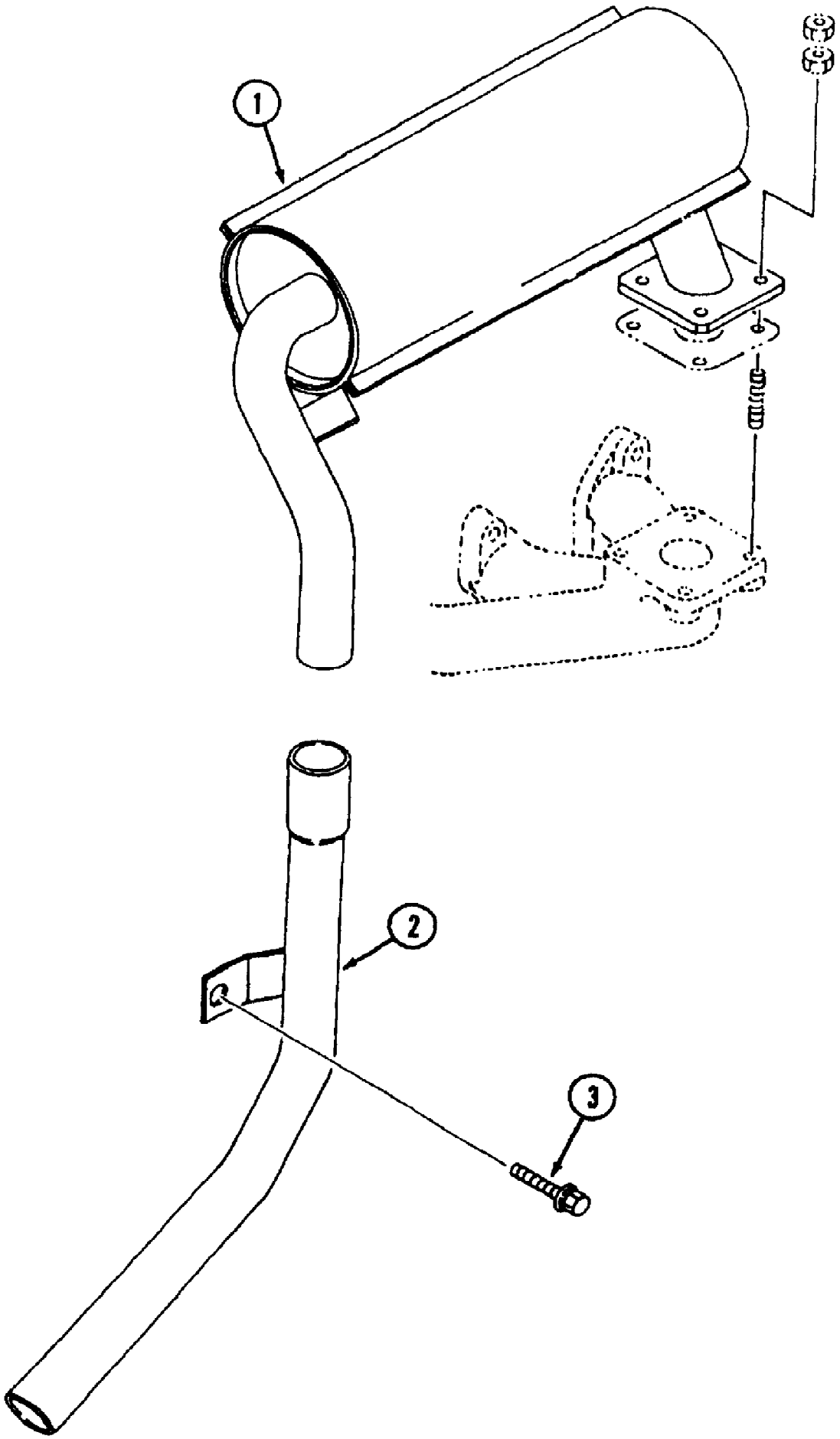

www.mymowerparts.com

For Discount Cub Cadet Parts Call 606-678-9623 or 606-561-4983

Ref #	Part Number	Qty	S/P/F	Description
1	MA-196703110K1	1		Muffler
2	MA-196703180K0	1		Pipe, Tail
3	MA-H1840108020	1		Bolt

www.mymowerparts.com

For Discount Cub Cadet Parts Call 606-678-9623 or 606-561-4983

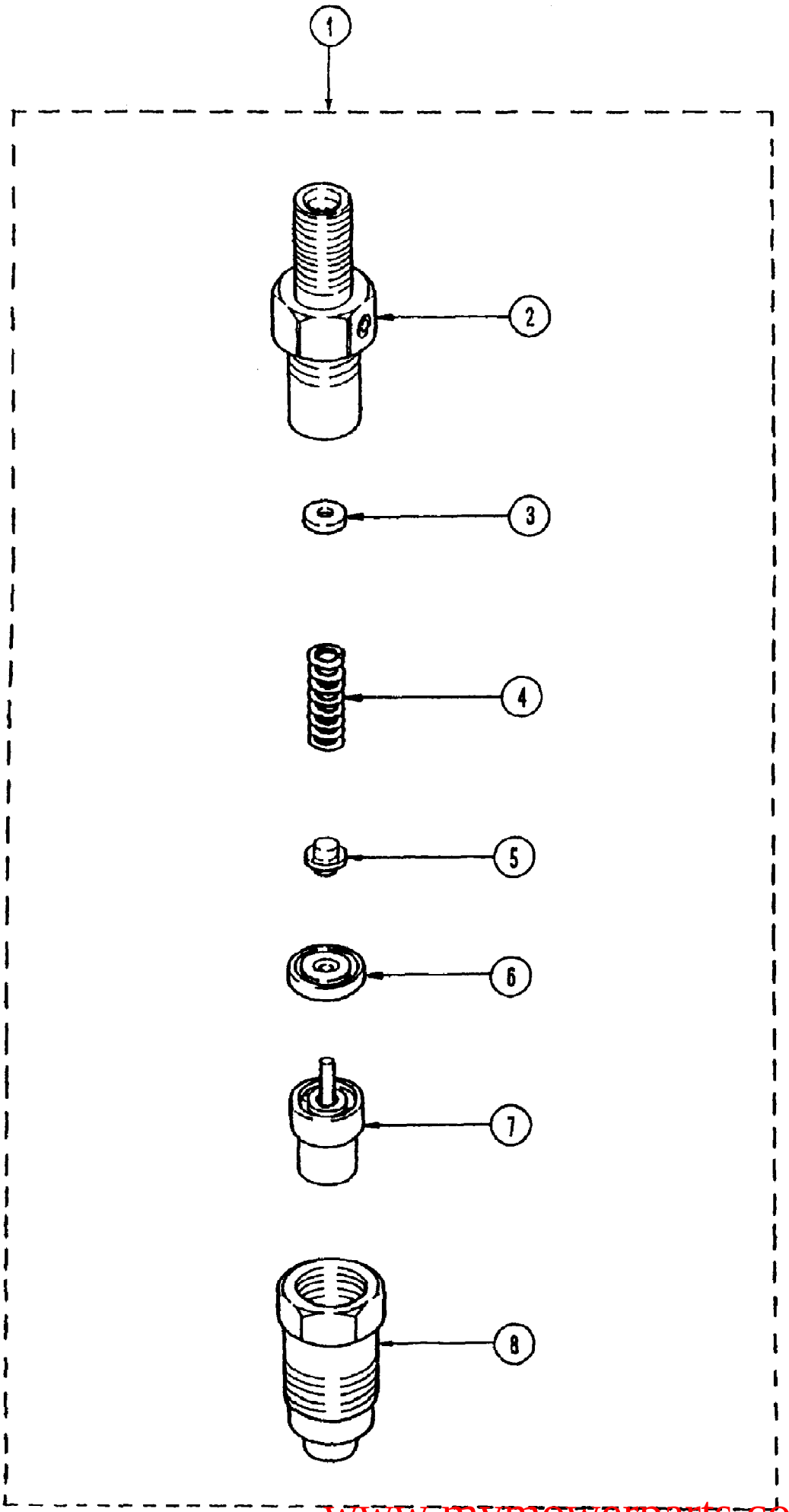

www.mymowerparts.com

For Discount Cub Cadet Parts Call 606-678-9623 or 606-561-4983

Ref #	Part Number	Qty	S/P/F	Description
1	MA-MM43594101	3		Nozzle & Holder Ass'y
2	MA-09311-03840	3		Body Sub Ass'y.
3	MA-09317-51810	AR		Washer T=1.25
	MA-09317-51810	AR		Washer T=1.25
	MA-09317-51830	AR		Washer T=1.30
	MA-09317-51830	AR		Washer T=1.30
	MA-09317-51850	AR		Washer T=1.35
	MA-09317-51850	AR		Washer T=1.35
	MA-09317-51870	AR		Washer T=1.40
	MA-09317-51870	AR		Washer T=1.40
	MA-09317-51890	AR		Washer T=1.45
	MA-09317-51890	AR		Washer T=1.45
	MA-09317-51910	AR		Washer T=1.50
	MA-09317-51910	AR		Washer T=1.50
	MA-09317-51930	AR		Washer T=1.55
	MA-09317-51930	AR		Washer T=1.55
	MA-09317-51950	AR		Washer T=1.60
	MA-09317-51950	AR		Washer T=1.60
	MA-09317-51970	AR		Washer T=1.65
	MA-09317-51990	AR		Washer T=1.70
4	MA-09312-70310	3		Spring, Pressure
5	MA-09312-10380	3		Pin, Pressure
6	MA-09317-40070	3		Piece, Distance
7	MA-09340-05060	3		Nozzle Ass'y.
8	MA-09316-41351	3		Nut, Retaining

www.mymowerparts.com

For Discount Cub Cadet Parts Call 606-678-9623 or 606-561-4983

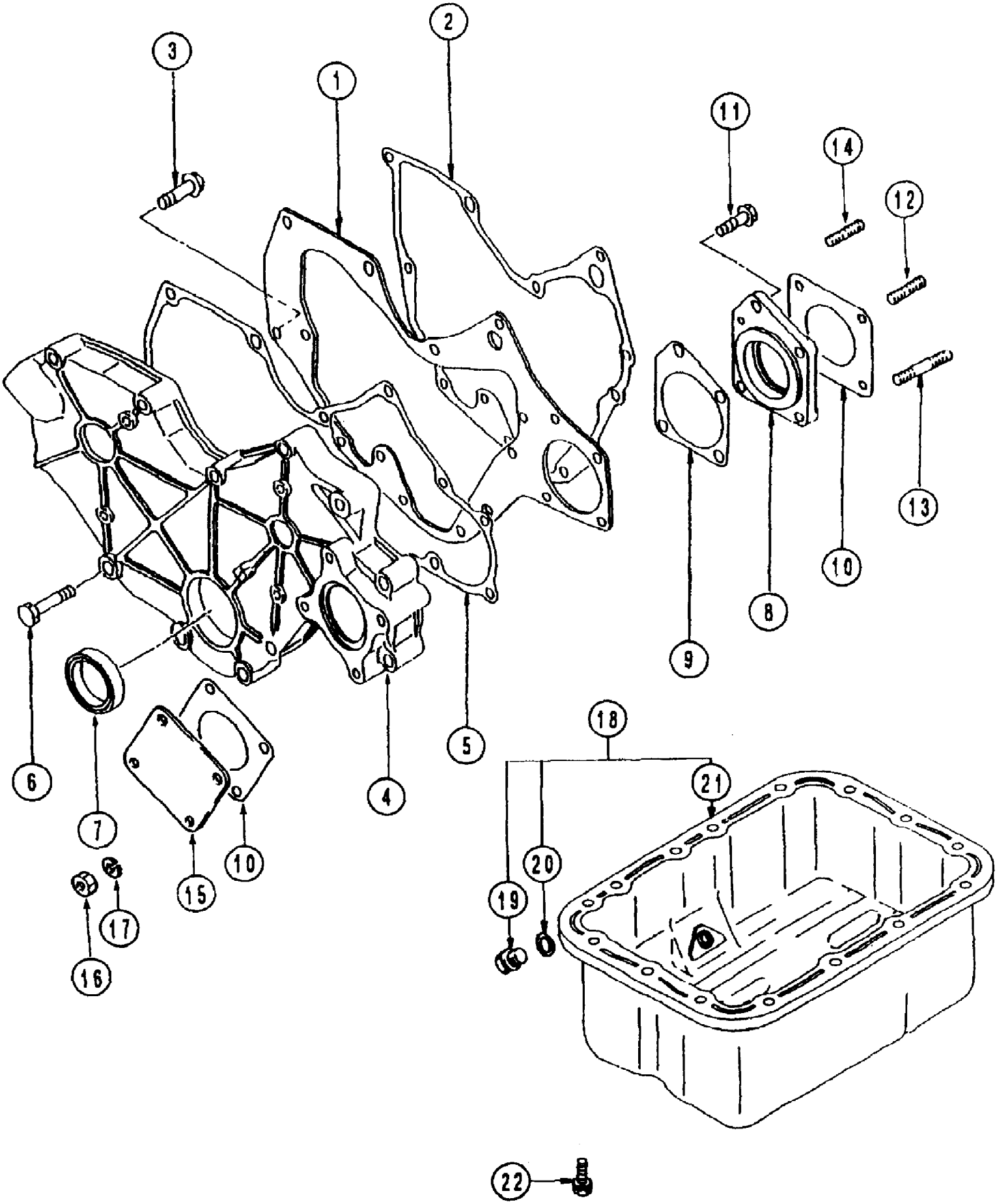

www.mymowerparts.com

For Discount Cub Cadet Parts Call 606-678-9623 or 606-561-4983

Ref #	Part Number	Qty	S/P/F	Description
1	MA-31A11-02100	1		Plate, Front
2	MA-31A07-11901	1		Gasket, Front Plate
3	MA-F1540108016	7		Bolt, W/Washer
4	MA-31A11-00800	1	/P	Case, Gear, PTO
5	MA-31A11-11101	1	S	Gasket, Gear
6	MA-F1035-08045	8		Bolt
7	MA-MD008762	1		Seal, Oil
8	MA-31A11-05101	1		Housing, Gear Pump
9	MA-31A11-05201	1		Gasket, Housing
10	MA-MM40120601	2	S	Gasket, O/Pump Cover
11	MA-F1540108030	1		Bolt, W/Washer
12	MA-MF401936	1	S	Stud
13	MA-MS401335	1		Stud
14	MA-MF401935	2		Stud
15	MA-MM401205	1	S	Cover,Oil Pump
16	MA-MF430005	2		Nut
17	MA-MF450405	2		Washer, Spring
18	MA-31B13-10021	1		Pan Ass'y., Oil
19	MA-MD050316	1		Plug
20	MA-MD050317	1		Gasket,Oil Drain
21	~NLA	1		Pan, Oil
22	MA-F1540108016	15		Bolt, W/Washer

www.mymowerparts.com

For Discount Cub Cadet Parts Call 606-678-9623 or 606-561-4983

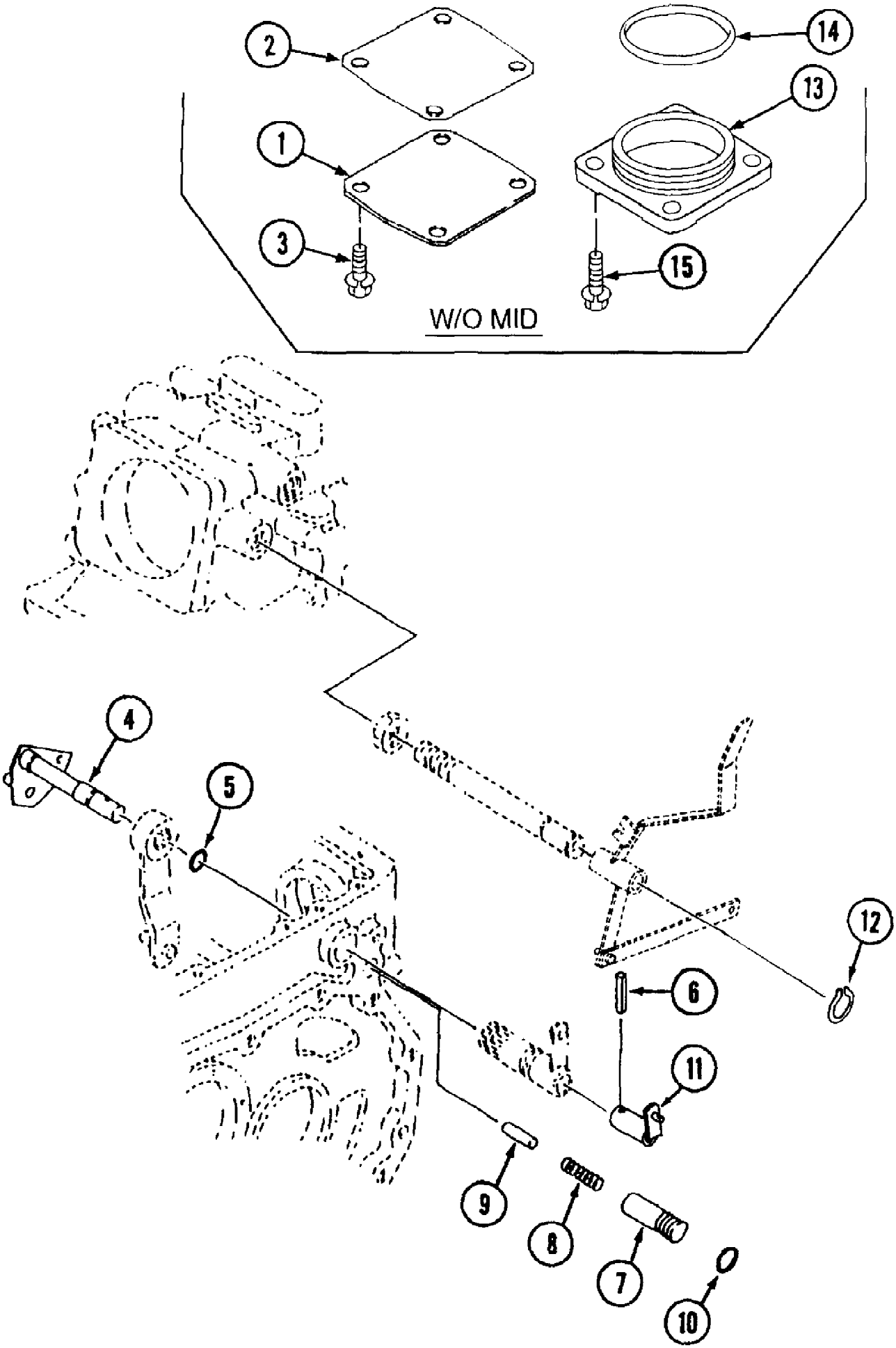

www.mymowerparts.com

For Discount Cub Cadet Parts Call 606-678-9623 or 606-561-4983

Ref #	Part Number	Qty	S/P/F	Description
1	MA-19631602AG2	1	/P/F	Cover
2	MA-19671612000	1	F	Gasket
3	MA-F1550110025	4	F	Bolt
4	MA-19631651000	1		Shifter, Mid
5	MA-08301100120	1	/P	O-Ring
6	MA-10191734000	1		Pin, Spring
7	MA-19631652000	1		Boss
8	MA-67428-01700	1		Spring
9	MA-11741737000	1		Pin
10	MA-08300100160	1	/P	O-Ring
11	MA-19631654AG0	1		Arm, Mid
12	MA-07400102000	1		Ring
13	MA-19671601AG0	1	F	Cover
14	MA-08300200950	1	F	Ring Used with MA-19671601AG0 Cover Only.
15	MA-F1550110030	4	F	Bolt Used with MA-19671601AG0 Cover Only.

www.mymowerparts.com

For Discount Cub Cadet Parts Call 606-678-9623 or 606-561-4983

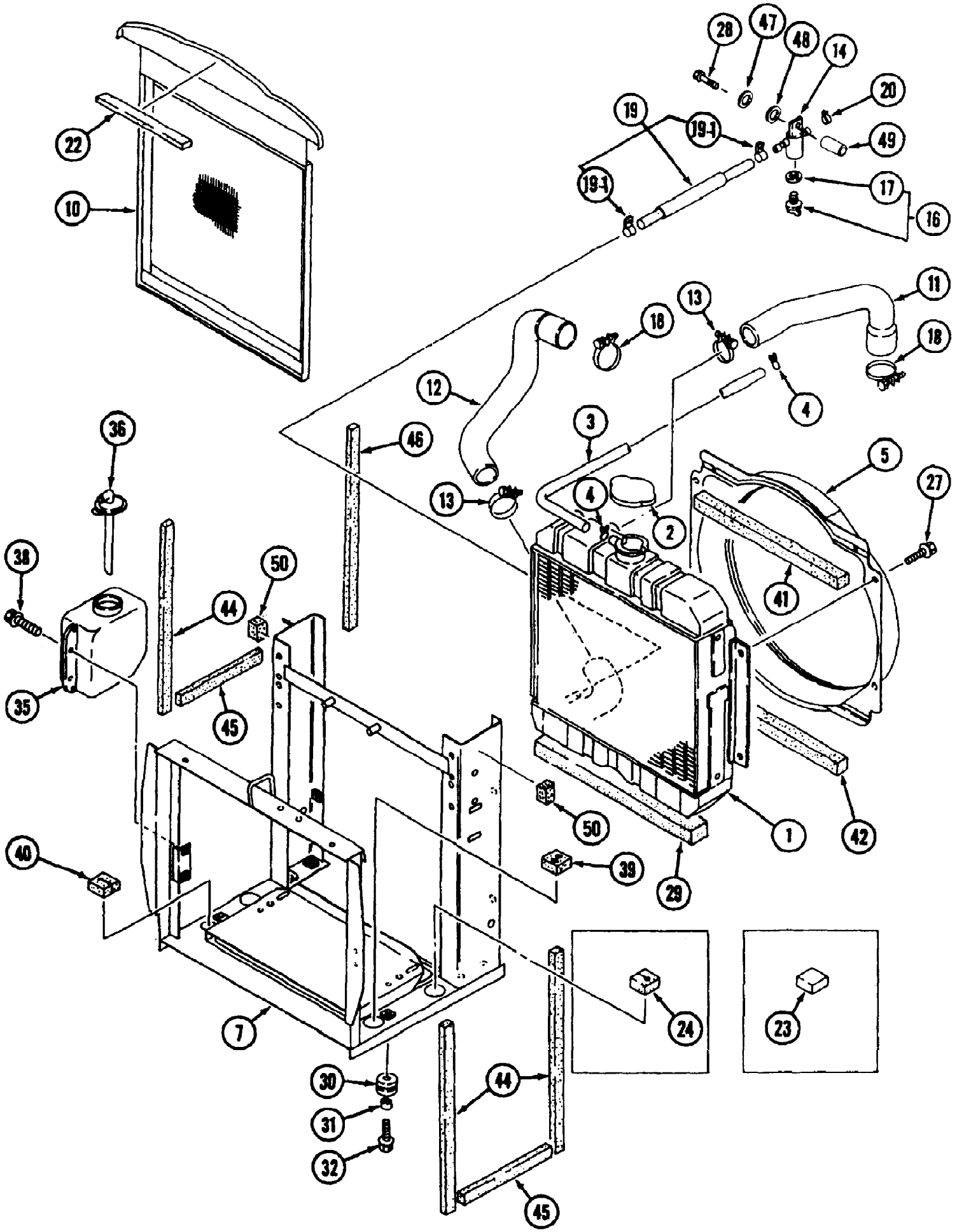

www.mymowerparts.com

For Discount Cub Cadet Parts Call 606-678-9623 or 606-561-4983

Ref #	Part Number	Qty	S/P/F	Description
	MA-19630411000	1	/P	Radiator Includes Items 1 - 4
1	MA-19630411100	1	S	Body, Radiator
2	MA-68201-01813	1		Cap
3	MA-19640411200	1		Hose, Rubber
4	MA-68201-01814	2		Clip
5	MA-19670421AG0	1		Shroud Fan
7	MA-19670413AG1	1		Bracket, Radiator
	MA-19670413AG2	1		Bracket, Radiator Replaces MA-19670413AG1 when inventory is depleted
10	MA-19670416AG0	1		Net Radiator
11	MA-10380416000	1		Hose, Upper
12	MA-10320417000	1		Hose, Outlet
13	MA-00501100380	2		Clamp, Hose
14	MA-11740415000	1		Joint, Water
16	MA-67401A00113	1	/P	Water Cock Ass'y.
17	MA-67401-00114	1		Gasket
18	MA-00501100450	2		Clamp, Hose
19	MA-19630422001	1	S	Hose, Drain Ass'y Includes 19 & 19-1
19-1	MA-69501-06613	2		Clamp
20	MA-00504112005	1		Clamp, Hose
22	MA-10303531000	1		Rubber B
23	MA-19630426000	2		Cushion (Gear)
24		1		Cushion (HST) Not used on this product
27	MA-H1840108020	4		Bolt
28	MA-A0540108095	1		Bolt
29	MA-11912638000	1		Cushion
30	MA-11930439000	6		Grommet
31	MA-67700-26000	6		Collar
32	MA-H1540108030	6	/P	Bolt
	MA-19080445000	1		Sub Tank Ass'y. Includes 35 & 36
35	MA-19080445100	1		Tank, Sub
36	MA-19080445200	1		Cap Ass'y.
38	MA-H1440106016	2	/P	Bolt
39	MA-19630424000	1		Cushion
40	MA-19630425000	1		Cushion
41	MA-35187645500	1		Seal
42	MA-35080771000	1		Rubber
44	MA-19630431000	3		Cushion
45	MA-19630432000	2		Cushion
46	MA-19630434000	1		Cushion
47	MA-A3600100802	1		Washer
48	MA-03500140818	1		Washer
49	MA-10312574000	1		Collar
50	MA-10212677000	2		Cushion B

www.mymowerparts.com

For Discount Cub Cadet Parts Call 606-678-9623 or 606-561-4983

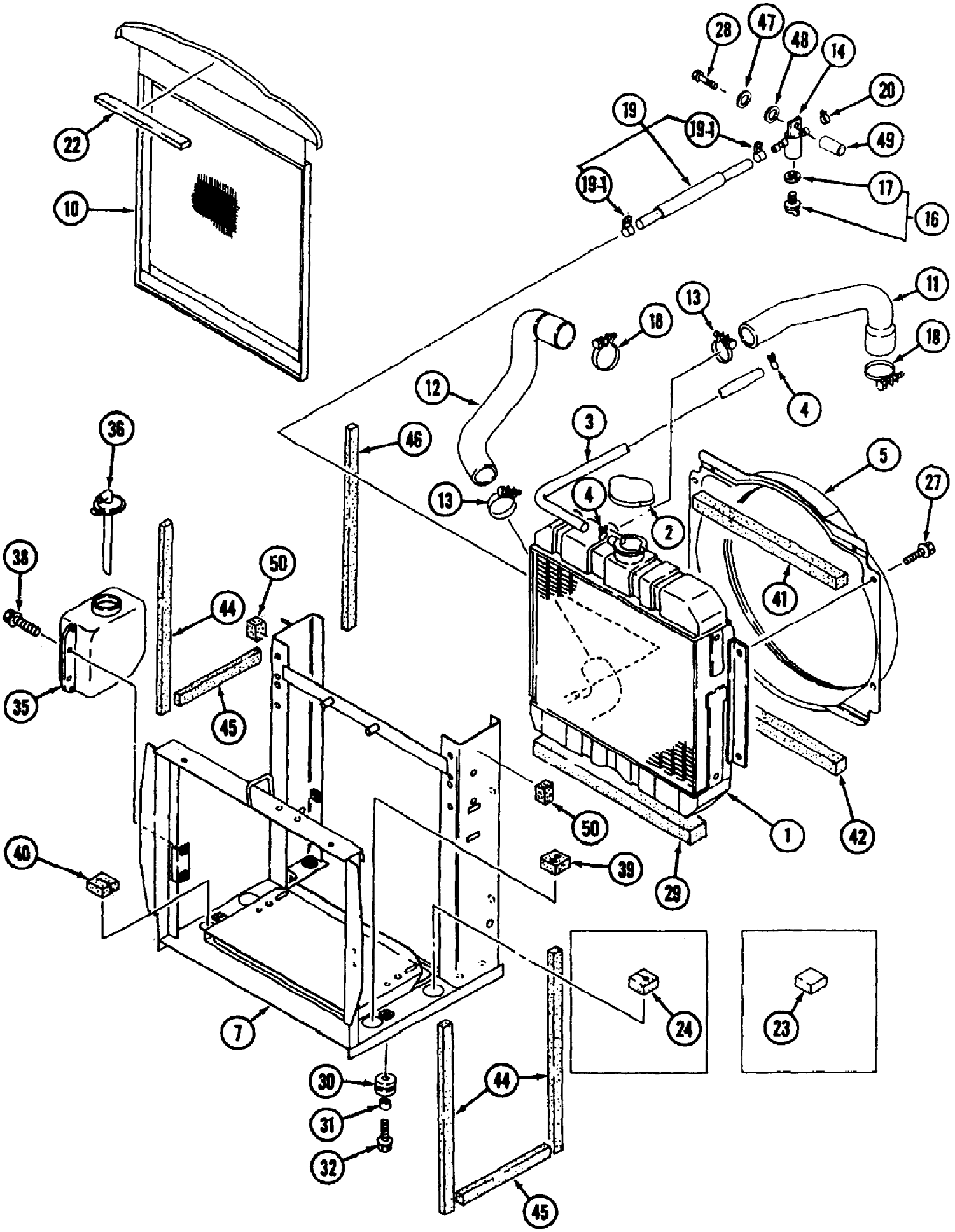

www.mymowerparts.com

For Discount Cub Cadet Parts Call 606-678-9623 or 606-561-4983

Ref #	Part Number	Qty	S/P/F	Description
	MA-19630411000	1	/P	Radiator
1	MA-19630411100	1	S	Body, Radiator
2	MA-68201-01813	1		Cap
3	MA-19640411200	1		Hose, Rubber
4	MA-68201-01814	2		Clip
5	MA-19670421AG0	1		Shroud Fan
7	MA-19670413AG1	1		Bracket, Radiator
	MA-19670413AG2	1		Bracket, Radiator Replaces MA-19670413AG1 when inventory is depleted
10	MA-19670416AG0	1		Net Radiator
11	MA-10380416000	1		Hose, Upper
12	MA-10320417000	1		Hose, Outlet
13	MA-00501100380	2		Clamp, Hose
14	MA-11740415000	1		Joint, Water
16	MA-67401A00113	1	/P	Water Cock Ass'y.
17	MA-67401-00114	1		Gasket
18	MA-00501100450	2		Clamp, Hose
19	MA-19630422001	1	S	Hose, Drain Ass'y Includes 19 & 19-1
19-1	MA-69501-06613	2		Clamp
20	MA-00504112005	1		Clamp, Hose
22	MA-10303531000	1		Rubber B
23		1		Cushion (Gear) Not used on this product
24	MA-19630427000	2		Cushion (HST)
27	MA-H1840108020	4		Bolt
28	MA-A0540108095	1		Bolt
29	MA-11912638000	1		Cushion
30	MA-11930439000	6		Grommet
31	MA-67700-26000	6		Collar
32	MA-H1540108030	6	/P	Bolt
	MA-19080445000	1		Sub Tank Ass'y. Includes 35 & 36
35	MA-19080445100	1		Tank, Sub
36	MA-19080445200	1		Cap Ass'y.
38	MA-H1440106016	2	/P	Bolt
39	MA-19630424000	1		Cushion
40	MA-19630425000	1		Cushion
41	MA-35187645500	1		Seal
42	MA-35080771000	1		Rubber
44	MA-19630431000	3		Cushion
45	MA-19630432000	2		Cushion
46	MA-19630434000	1		Cushion
47	MA-A3600100802	1		Washer
48	MA-03500140818	1		Washer
49	MA-10312574000	1		Collar
50	MA-10212677000	2		Cushion B

www.mymowerparts.com

For Discount Cub Cadet Parts Call 606-678-9623 or 606-561-4983

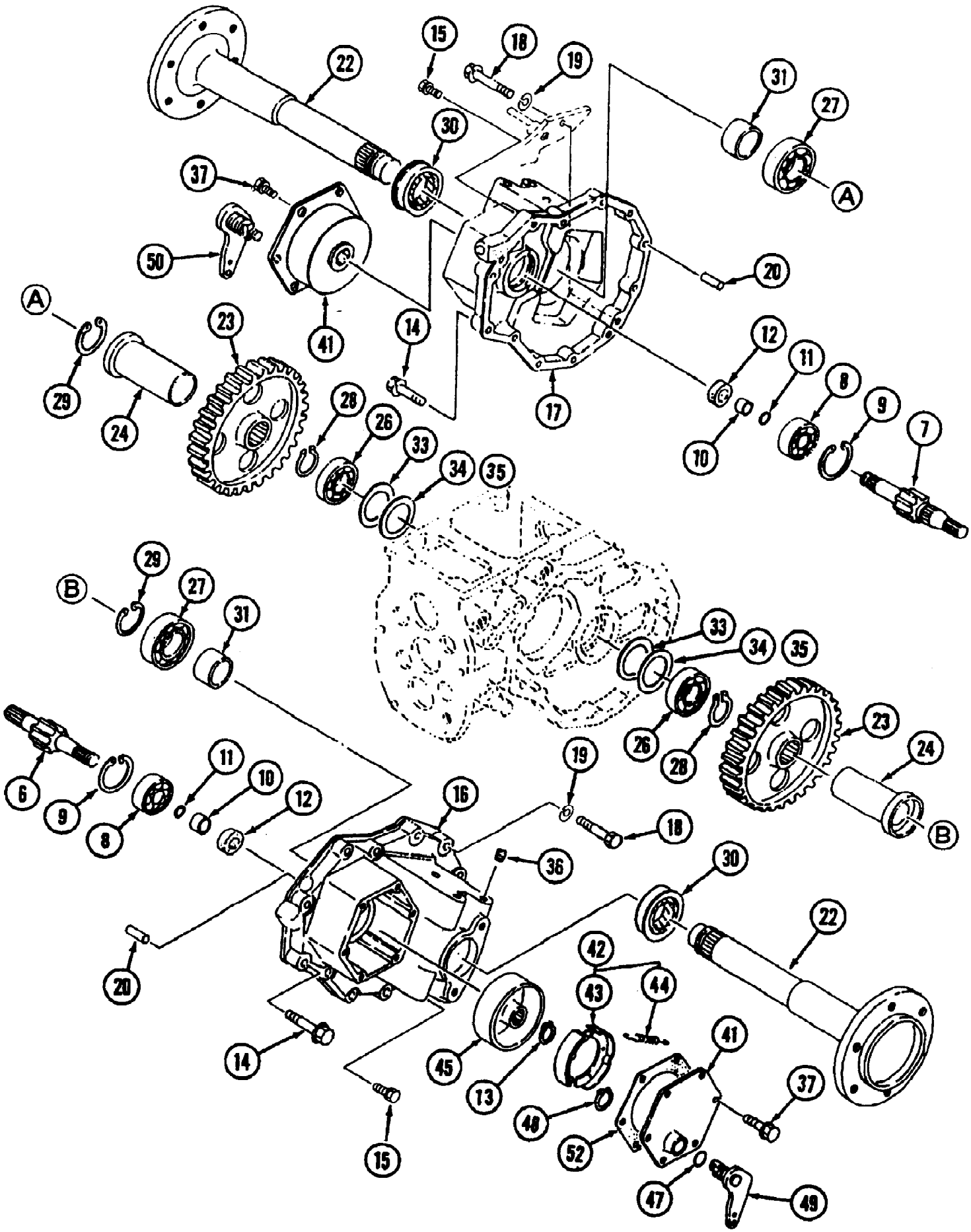

www.mymowerparts.com

For Discount Cub Cadet Parts Call 606-678-9623 or 606-561-4983

Ref #	Part Number	Qty	S/P/F	Description
6	MA-19631511000	1		Shaft, L.H.
7	MA-19631512000	1		Shaft, R.H.
8	MA-07520663050	2		Bearing
9	MA-07410006201	2		Ring
10	MA-11351402100	2		Bushing
11	MA-08300100250	2		O-Ring
12	MA-08411355511	2		Seal, Oil
13	MA-07400002500	2	/P	Ring
14	MA-F1550110045	14		Bolt
15	MA-F1550110050	4		Bolt
16	MA-19631513AG1	1		Case, L.H.
17	MA-19631514AG1	1		Case, R.H.
18	MA-A0550110065	6		Bolt
19	MA-A3600101002	6	/P	Washer
20	MA-05401010020	4		Pin, Dowel
22	MA-19631516AG0	2		Shaft, Axle
23	MA-10321509000	2		Gear, 72T
24	MA-19631518000	2		Collar
26	MA-07500062070	2		Bearing
27	MA-07500062090	2		Bearing
28	MA-07400004501	2		Ring
29	MA-07410008501	2		Ring
30	MA-13331454000	2		Seal, Oil
31	MA-13331456000	2		Bush
	MA-19631519000	2		Shim, Set Includes 33-35
33	MA-07300007204	AR		Liner t=0.4
34	MA-07300007208	AR		Liner t=0.8
35	MA-07300007202	AR		Liner t=0.2
36	MA-05534-14000	4		Plug
37	MA-F1540108020	12		Bolt
	MA-19861451AG0	1		Brake Ass'y., L.H. Includes 41-49
	MA-19861461AG0	1		Brake Ass'y., R.H. Includes 41-48, 50
41	MA-19861452AG0	1 (2)		Cover, Brake
42	MA-19861467000	2 (4)		Shoe, Set
43		2 (4)		Shoe, Brake
44		2 (4)		Spring
45	MA-19861456000	1 (2)		Drum, Brake
47	MA-08300100180	1 (2)	/P	O-Ring
48	MA-07400002200	1 (2)		Ring
49	MA-19861455AG0	1		Cam Brake, L.H.
50	MA-19861462AG0	1		Cam Brake, R.H.
52	MA-10071435000	2		Gasket

www.mymowerparts.com

For Discount Cub Cadet Parts Call 606-678-9623 or 606-561-4983

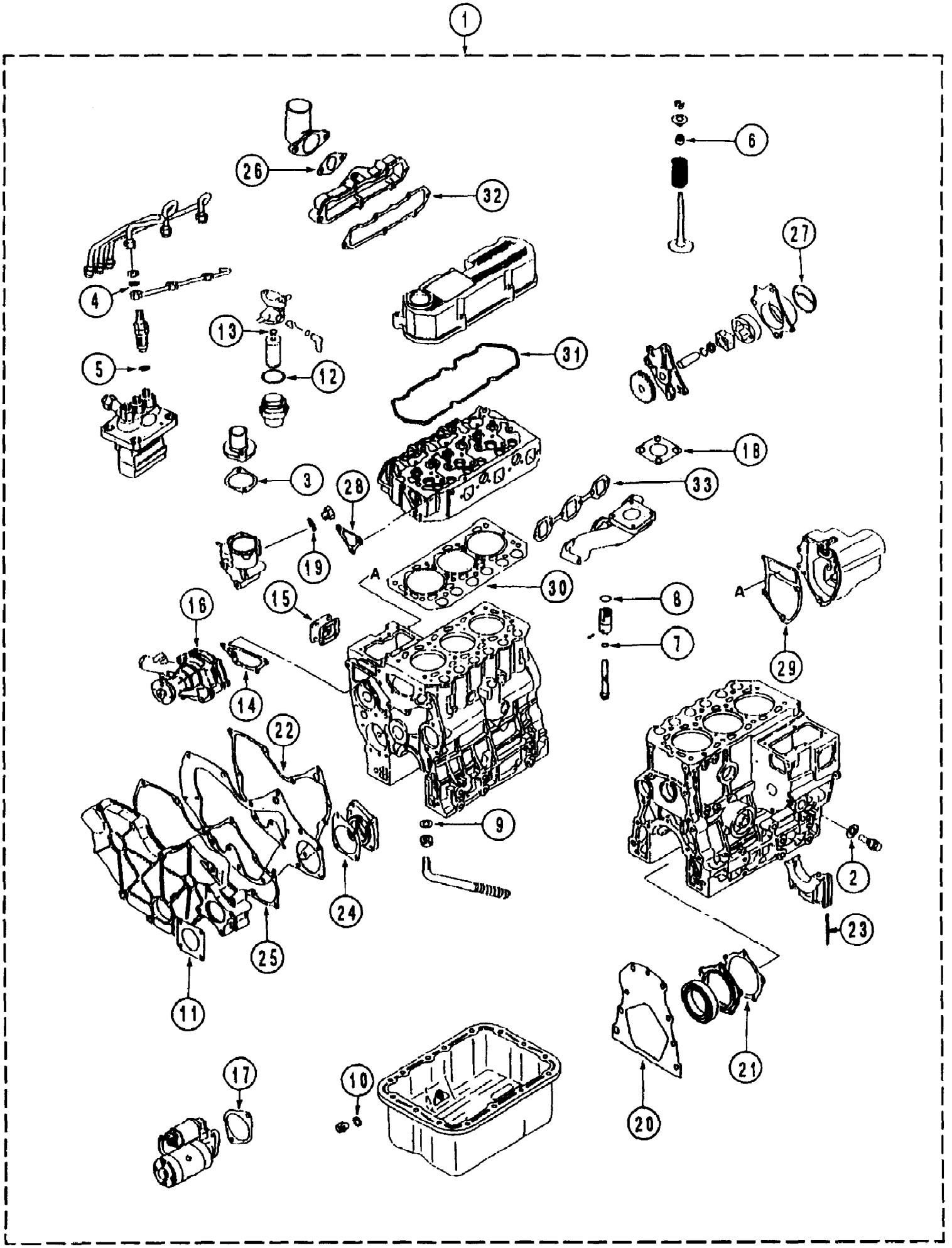

www.mymowerparts.com

For Discount Cub Cadet Parts Call 606-678-9623 or 606-561-4983

Ref #	Part Number	Qty	S/P/F	Description
1	MA-31B94-20061	1	S	Gasket Kit, (O/H)
2	MA-F4202-22000	1		Gasket
3	MA-MD000551	1	S	Gasket
4	MA-MD068355	3		Gasket
5	MA-MD070717	3		Gasket
6	MA-MD115472	6		Seal, Valve Stem
7	MA-MD701788	1		O-Ring
8	MA-MF520012	1	S	O-Ring
9	MA-MF660036	1		Gasket
10	MA-F4202-14000	2		Gasket
11	MA-MM40120601	2	S	Gasket, O/Pump Cover
12	MA-MM404878	1		O-Ring
13	MA-MM404881	1	S	O-Ring
14	MA-30H45-00100	1	S	Gasket, Water Pump
15	MA-MM40915101	1	S	Gasket, Tie-Rod Cover
16	MA-MM409326	1		Gasket, Water Pump
17	MA-MM40941901	1	S	Gasket, Starter
18	MA-30A30-00200	1		Gasket
19	MA-30636-35900	1		Gasket
20	MA-31A07-02401	1		Gasket, Rear Plate
21	MA-31A07-11701	1		Gasket, Oil Seal Case
22	MA-31A07-11901	1		Gasket, Front Plate
23	MA-31A07-12200	4		Seal, Side
24	MA-31A11-05201	1		Gasket, Housing
25	MA-31A11-11101	1	S	Gasket, Gear
26	MA-31A30-00801	1		Gasket, Inlet
27	MA-31A35-02300	1		Packing, Body
28	MA-31A46-10101	1		Gasket, Thermo Case
29	MA-31A63-12201	1	S	Gasket, Governor Case
30	MA-31B01-23200	1		Gasket, Cylinder Head
31	MA-31B04-13201	1	/P	Gasket, Rocker Cover
32	MA-31B30-00902	1		Gasket, Inlet Cover
33	MA-31B32-01200	1		Gasket, Exh. Manifold
		1		Gasket, Liquid Not Shown; Purchase Locally

www.mymowerparts.com

For Discount Cub Cadet Parts Call 606-678-9623 or 606-561-4983

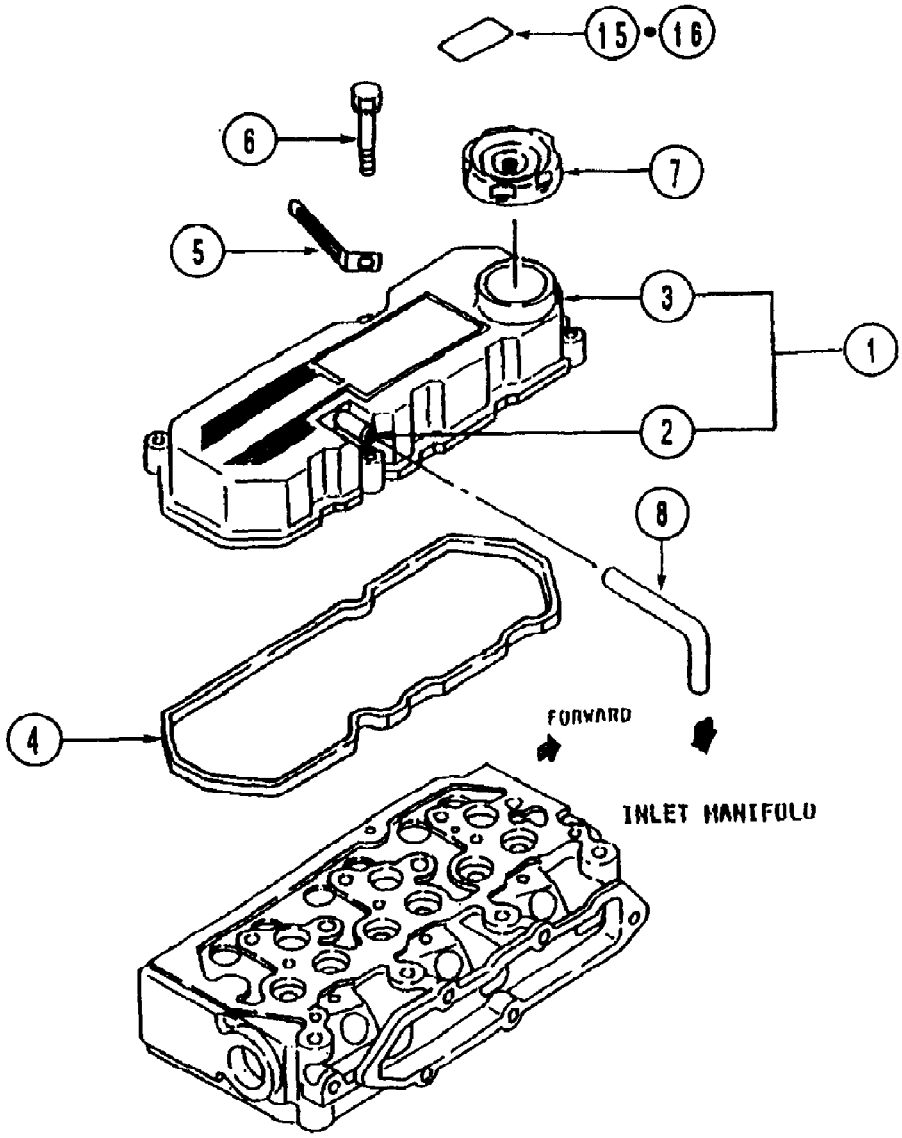

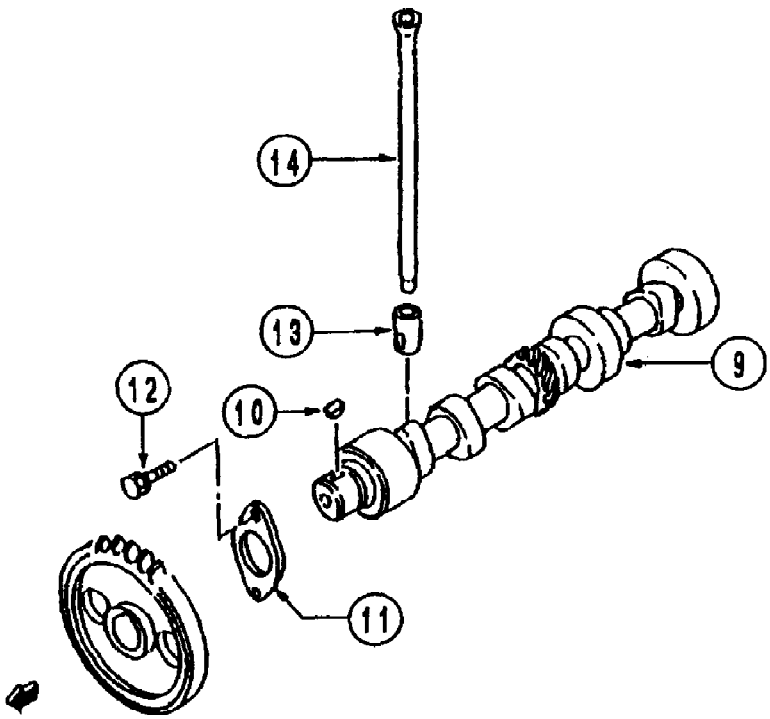

www.mymowerparts.com

For Discount Cub Cadet Parts Call 606-678-9623 or 606-561-4983

Ref #	Part Number	Qty	S/P/F	Description
1	MA-31B04-03010	1		Cover Ass'y., Rocker
2	MA-K9644171	1		Pipe
3	~NLA	1		Cover, Rocker
4	MA-31B04-13201	1	/P	Gasket, Rocker
5	MA-MS470059	1		Clip
6	MA-F1540108040	4		Bolt, W/Washer
7	MA-MD008784	1		Cap, Oil
8	MA-MM400380	1		Breather, Pipe
9	MA-31B05-00101	1	S	Camshaft
10	MA-MF476215	1		Key, Woodruff
11	MA-30405-31400	1		Plate, Thrust
12	MA-F1540108016	2		Bolt, W/Washer
13	MA-MM402737	6	S	Tappet
14	MA-31A05-01300	6		Rod, Push
15	MA-31B04-07400	1		Label, Model (Gear)
16		1		Label, Model (HST) Not used on this product

www.mymowerparts.com

For Discount Cub Cadet Parts Call 606-678-9623 or 606-561-4983

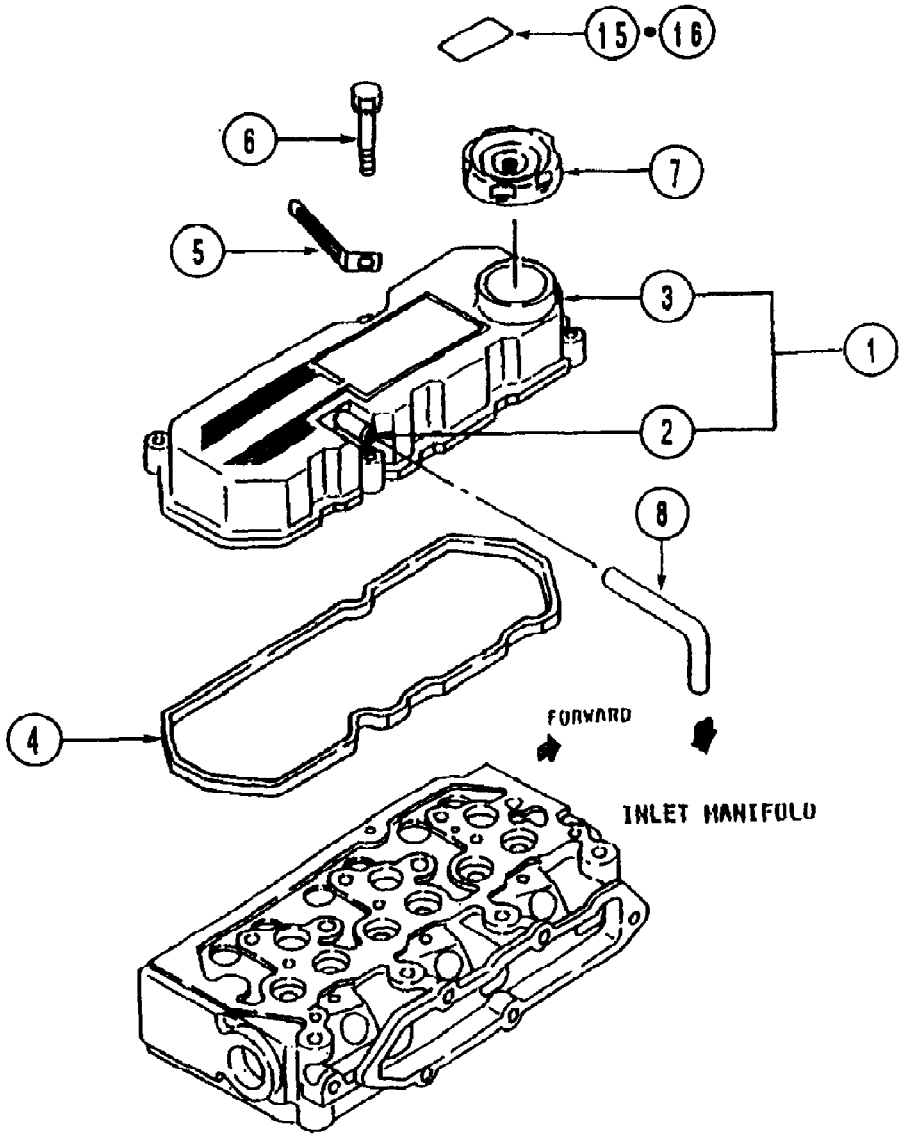

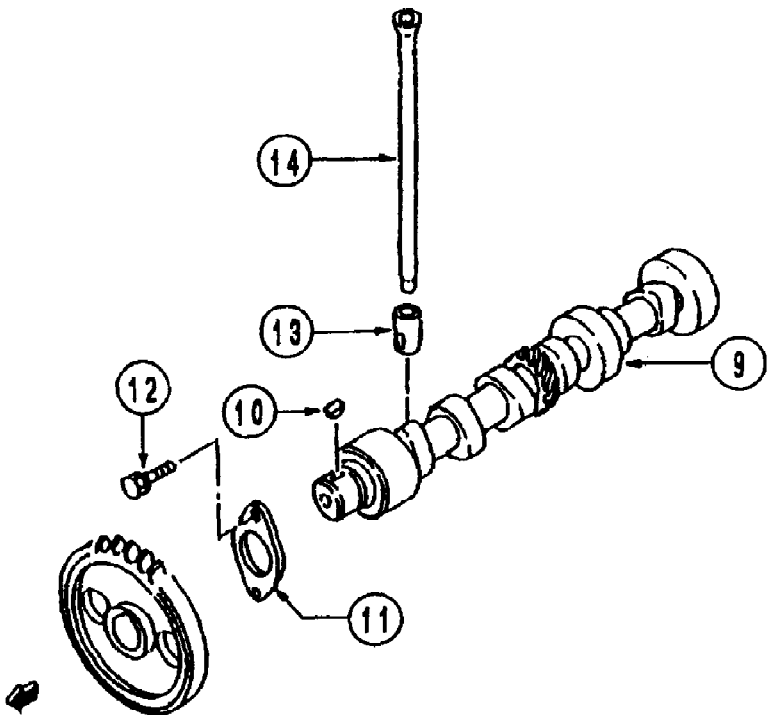

www.mymowerparts.com

For Discount Cub Cadet Parts Call 606-678-9623 or 606-561-4983

Ref #	Part Number	Qty	S/P/F	Description
1	MA-31B04-03010	1		Cover Ass'y., Rocker
2	MA-K9644171	1		Pipe
3	~NLA	1		Cover, Rocker
4	MA-31B04-13201	1	/P	Gasket, Rocker
5	MA-MS470059	1		Clip
6	MA-F1540108040	4		Bolt, W/Washer
7	MA-MD008784	1		Cap, Oil
8	MA-MM400380	1		Breather, Pipe
9	MA-31B05-00101	1	S	Camshaft
10	MA-MF476215	1		Key, Woodruff
11	MA-30405-31400	1		Plate, Thrust
12	MA-F1540108016	2		Bolt, W/Washer
13	MA-MM402737	6	S	Tappet
14	MA-31A05-01300	6		Rod, Push
15		1		Label, Model (Gear) Not used on this product
16	MA-31B04-07500	1		Label, Model (HST)

www.mymowerparts.com

For Discount Cub Cadet Parts Call 606-678-9623 or 606-561-4983

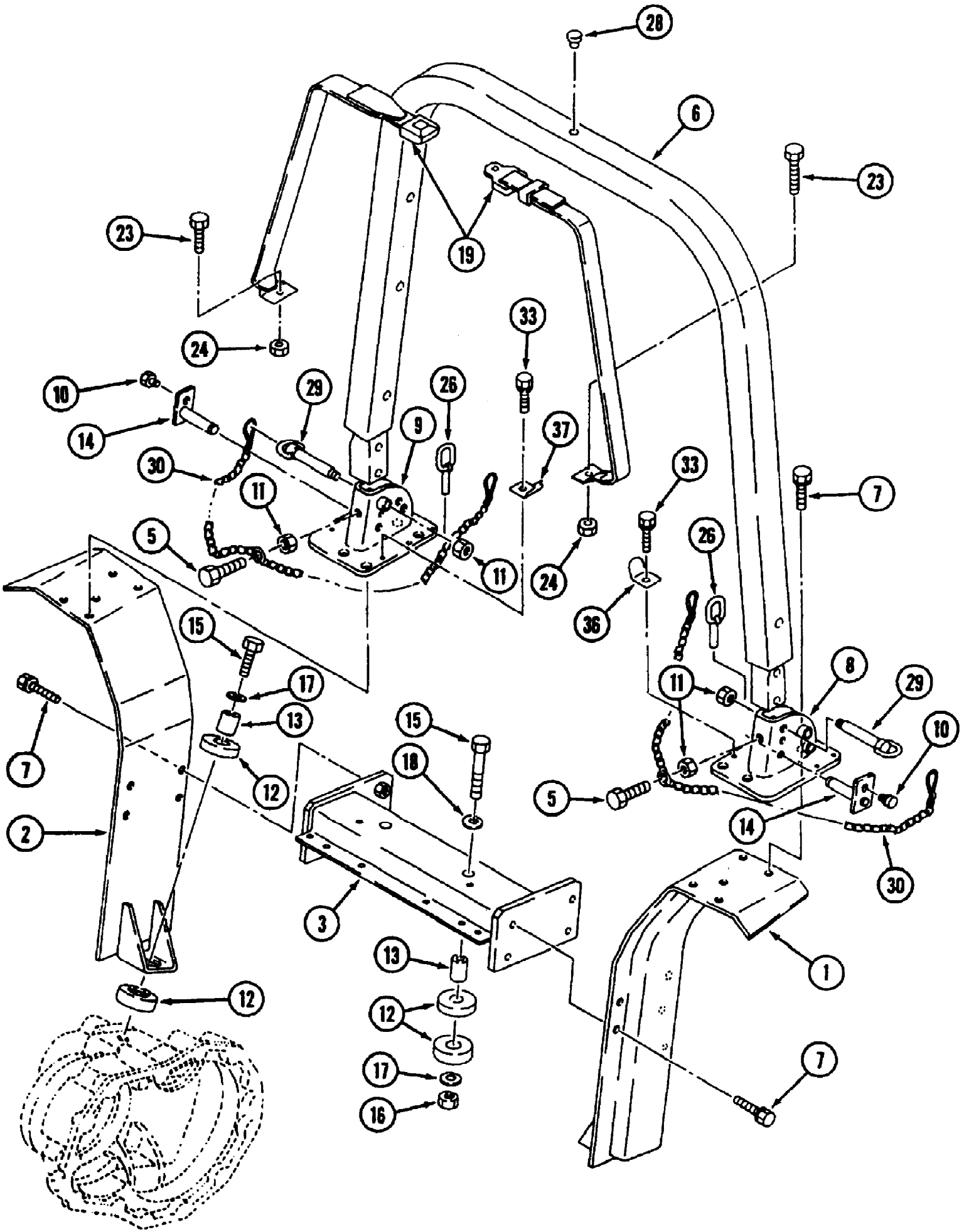

www.mymowerparts.com

For Discount Cub Cadet Parts Call 606-678-9623 or 606-561-4983

Ref #	Part Number	Qty	S/P/F	Description
1	MA-19633901BD0	1	/P	Frame, L.H.
2	MA-19633902BD0	1	/P	Frame, R.H.
3	MA-19633905BD0	1	/P	Support
5	MA-A0520112040	2		Bolt
6	MA-19633909AG0	1		Roll Bar
7	MA-F9450112035	16		Bolt
8	MA-19633903AG0	1		Bracket, L.H.
9	MA-19633904AG0	1		Bracket, R.H.
10	MA-19043907000	2		Bolt
11	MA-A3030112002	4		Nut
12	MA-19633914000	8		Rubber, Cushion
13	MA-19633915000	4		Collar
14	MA-19043903000	2		Pin, Hinge
15	MA-A9450116060	4		Bolt
16	MA-A0830116001	2		Nut
17	MA-03500171652	4		Washer
18	MA-03550161630	2		Washer
19	MA-19633919000	1	/P	Seat Belt Ass'y. (Includes Ref. No. 23 and 24)
23	MA-19633919400	2		Bolt
24	MA-19633919500	2		Nut
26	MA-19043905000	2		Pin, Linch
28	MA-11763534001	1		Plug, Mat
29	MA-19043904000	2		Pin
30	MA-19633912000	2		Chain
33	MA-F1540108012	2		Bolt
36	MA-19633926AG0	1		Hook, Seat Belt L.H.
37	MA-19633927AG0	1		Hook, Seat Belt R.H.

www.mymowerparts.com

For Discount Cub Cadet Parts Call 606-678-9623 or 606-561-4983

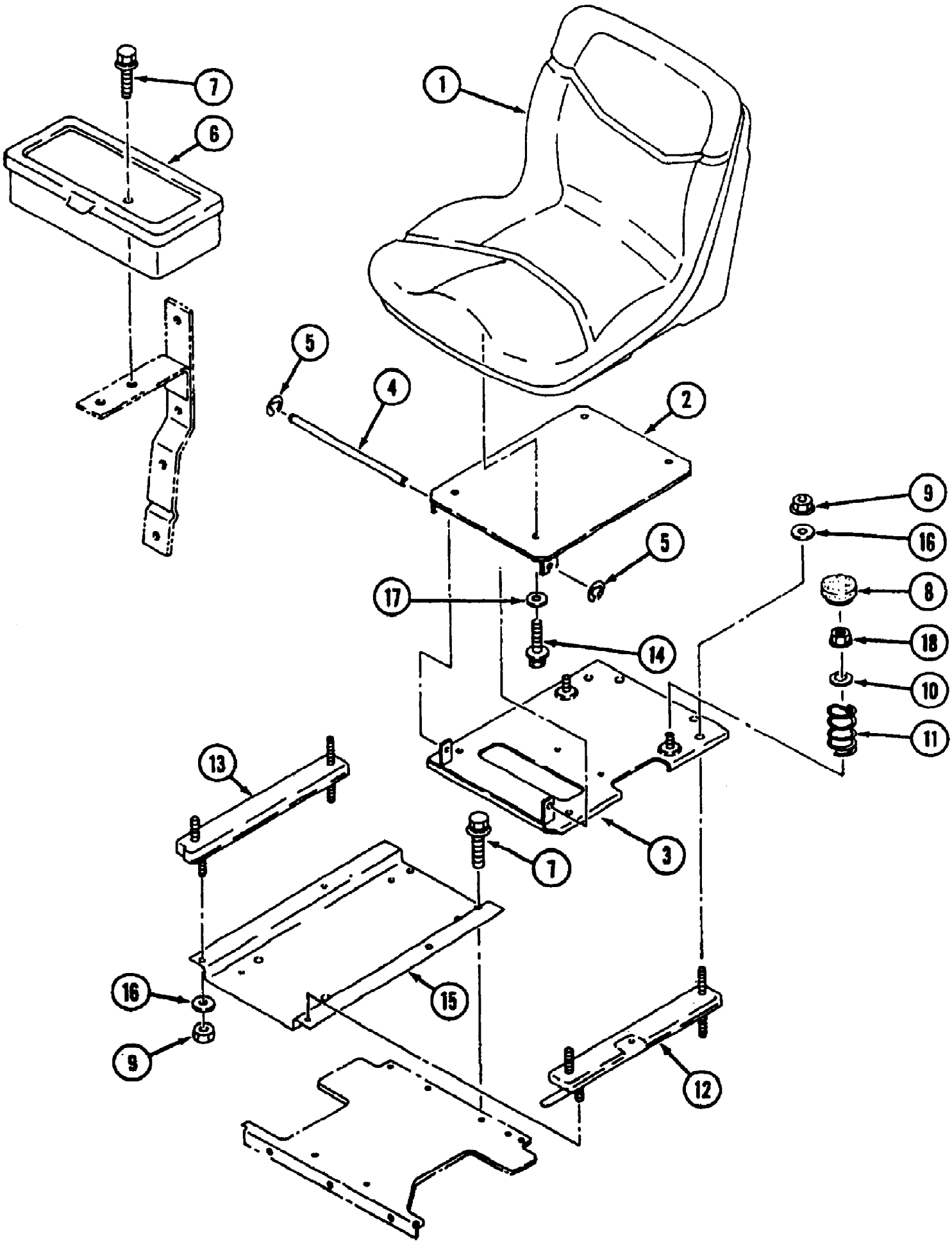

www.mymowerparts.com

For Discount Cub Cadet Parts Call 606-678-9623 or 606-561-4983

Ref #	Part Number	Qty	S/P/F	Description
1	757-3005	1		Seat Ass'y.
2	MA-19633404AG1	1		Bracket
3	MA-19633409AG1	1		Bracket, Seat
4	MA-19633411000	1		Pin
5	MA-07420100800	2		Ring
6	MA-69509-16000	1		Box, Tool
7	MA-H1540108020	6		Bolt
8	MA-19633417000	2		Rubber
9	712-3097	8	S	Nut, 8 mm
10	MA-03500160826	2		Washer
11	MA-19633415AG0	2	/P	Spring
12	703-2641	1		Adjuster, Slide
13	703-2640	1		Rail, Slide
14	710-3008	2	/P	Bolt
15	MA-19633408AG0	1		Support
16	736-0119	8	S	Washer, Lock, 5/16
17	736-0275	2	S	Washer, Flat, 5/16
18	MA-F3010108001	2		Nut

www.mymowerparts.com

For Discount Cub Cadet Parts Call 606-678-9623 or 606-561-4983

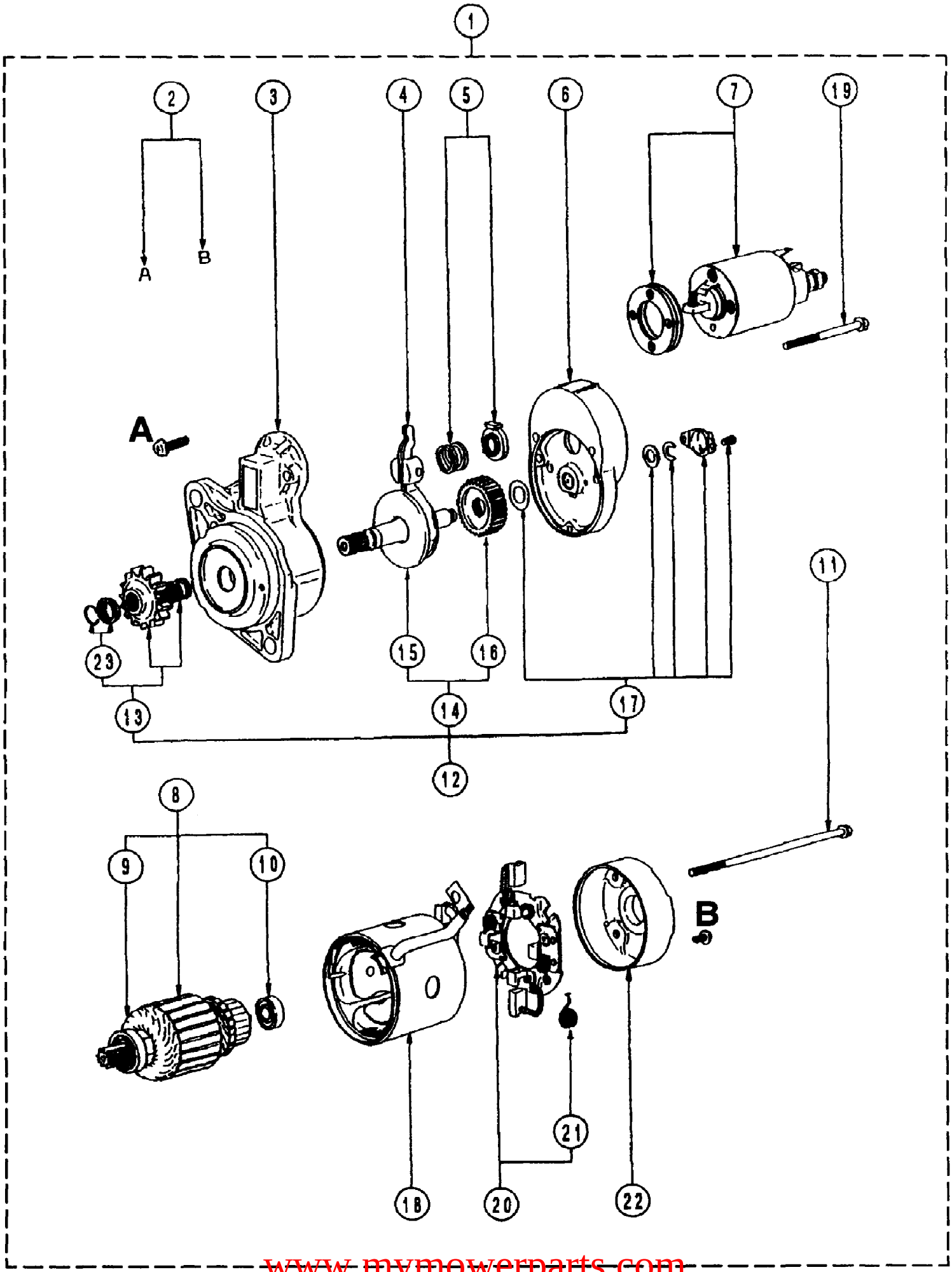

www.mymowerparts.com

For Discount Cub Cadet Parts Call 606-678-9623 or 606-561-4983

Ref #	Part Number	Qty	S/P/F	Description
1	MA-MM40941001	1	/P	Starter Ass'y
2	MA-M414X00472	1		Screw Set
3	MA-M641X03972	1		Bracket Ass'y, Front
4	MA-M863C04671	1		Lever Ass'y
5	MA-M389X10871	1		Spring Set
6	MA-M640B11971	1		Bracket Ass'y, Center
7	MA-M371X80171	1	/P	Switch Ass'y
8	MA-M106X57171	1		Armature Set
9	MA-S930P12170	1	S	Bearing, Front
10	MA-S930P14270	1	/P	Bearing, Rear
11	MA-M981C73901	2		Bolt Set
12	MA-M357X81371	1		Shaft Ass'y, Clutch
13	MA-MM502396	1		Pinion Set
14	MA-M231X00476	1		Gear Set
15	MA-M357C70771	1	S	Shaft Ass'y, Pinion
16	MA-M231C00401	1		Gear
17	MA-M212X09071	1		Cover Set
18	MA-M800X59471	1		Yoke Ass'y
19	MA-M981C74001	1		Bolt Set
20	MA-M649T04471	1		Holder Ass'y, Brush
21	MA-M391C00101	4		Spring, Brush
22	MA-M644810201	1		Bracket Ass'y, Rear
23	MA-M385X03471	1		Stopper Set

www.mymowerparts.com

For Discount Cub Cadet Parts Call 606-678-9623 or 606-561-4983

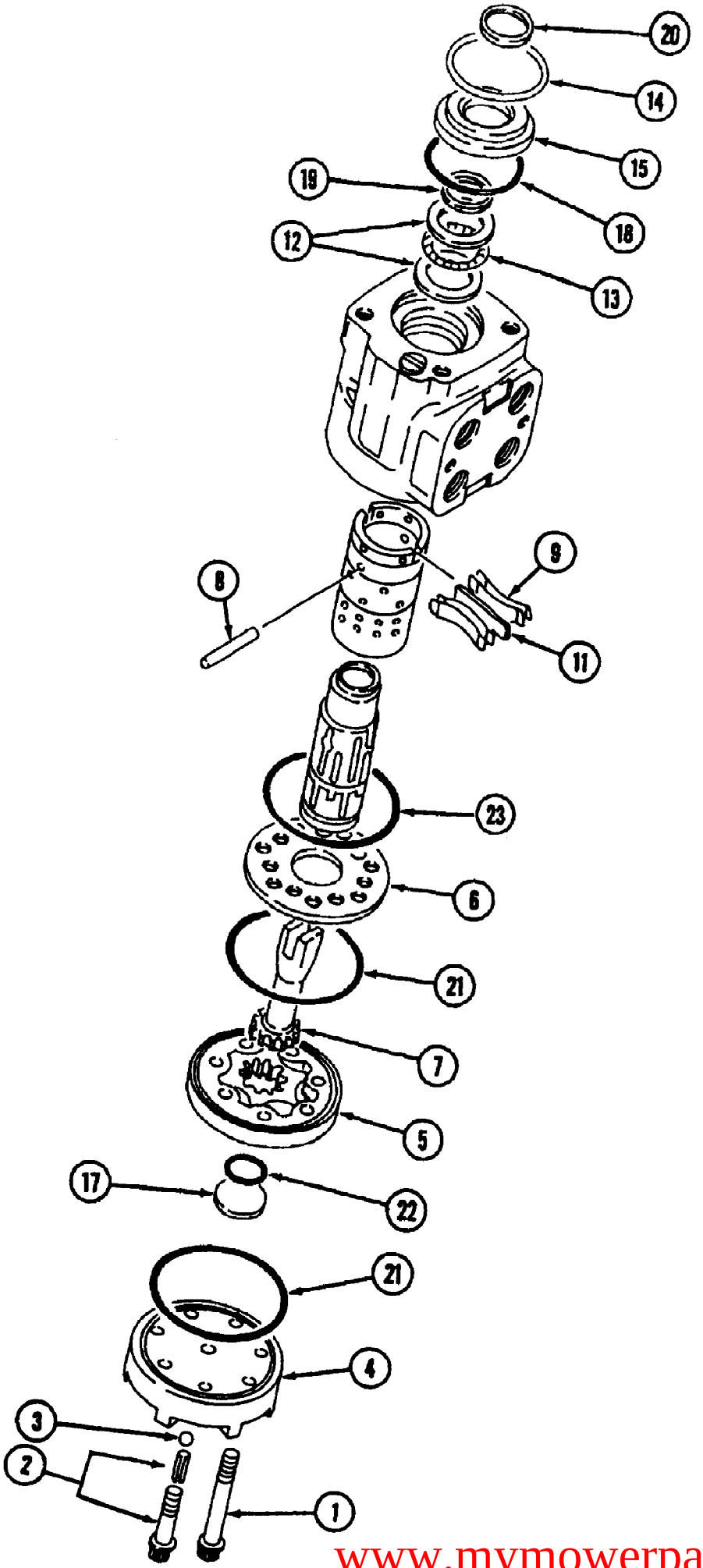

www.mymowerparts.com

For Discount Cub Cadet Parts Call 606-678-9623 or 606-561-4983

Ref #	Part Number	Qty	S/P/F	Description
	MA-10322231001	1	/P	Steering Unit
1	MA-10302268100	6		Screw
2	MA-10302268110	1		Retainer, Screw Ass'y.
3	MA-10302268120	1		Ball
4	MA-11932347120	1		Cap
5	MA-10322231100	1		Gerotor
6	MA-10302268210	1		Plate, Spacer
7	MA-10302268301	1		Drive
8	MA-10302268310	1		Pin
9	MA-11932347130	4		Spring, Centering
11	MA-10302268320	2		Spring, Flat
	MA-10302268700	1	/P	Kit,Needle Bearing Includes 12, 13
12	MA-10302268340	2		Race Bearing
13	MA-11932347140	1	S	Needle
14	MA-11932347150	1		Ring
15	MA-11932347160	1		Bushing
17	MA-10302268530	1		Plug
	MA-10302268600	1		Kit, Seal Includes 18-23
18	MA-10302268500	1		O-Ring
19	MA-10302268510	1		Oil, Seal
20	MA-10302268520	1		Seal, Dust
21	MA-10302268330	2		O-Ring
22	MA-10302268540	1		O-Ring
23	MA-10302268350	1		O-Ring

www.mymowerparts.com

For Discount Cub Cadet Parts Call 606-678-9623 or 606-561-4983

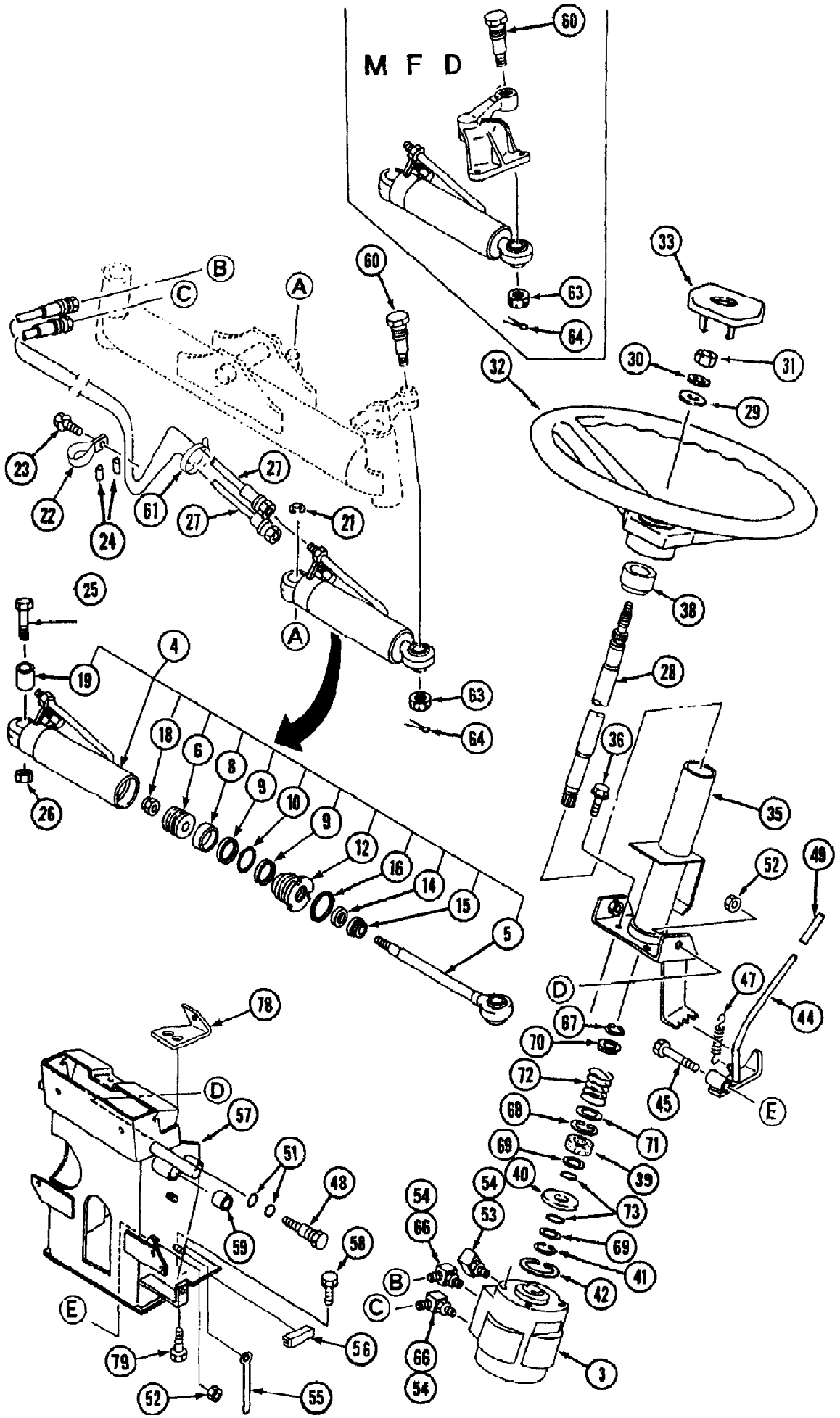

www.mymowerparts.com

For Discount Cub Cadet Parts Call 606-678-9623 or 606-561-4983

Ref #	Part Number	Qty	S/P/F	Description
3	MA-10322231001	1	/P	Steering Unit
4	MA-19672205AG0	1		Cylinder Ass'y. Includes items 5-19
5	MA-19632207AG0	1		Rod, Cylinder
6	MA-19632208000	1		Piston
	MA-19632209000	1		Kit, Seal A Includes items 8-10
8	MA-19632209100	1		Wear Ring
9	MA-08301100340	1		O-Ring
10	MA-08320100340	2		Ring
12	MA-19632211000	1		Case
	MA-19632212000	1		Kit, Seal B Includes items 14-16
14	MA-19632212100	1		Seal Rod
15	MA-19632212200	1		Seal, Dust
16	MA-08301100400	1		O-Ring
18	MA-A3530112000	1		Nut
19	MA-07963024250	1		Bushing
21	MA-07420101900	1		Ring (2WD)
22	MA-11812151000	1		Clamp
23	MA-H1540108020	1		Bolt
24	MA-19672226000	2		Cushion
25		1		Bolt (MFD) Not used on this product
26		1		Nut (MFD) Not used on this product
27	MA-19672231001	2		Hose
28	MA-19672245000	1		Shaft, Steering
29	MA-03500151430	1		Washer
30	MA-A3600101402	1		Washer
31	MA-A3030114002	1		Nut
	MA-10302216000	1		Steering Ass'y. Includes items 32, 33
32	MA-10302217000	1		Steering Wheel
33	MA-10302218000	1		Center Pad
35	MA-19632252AG0	1		Column
36	MA-F1550110020	4		Bolt
38	MA-11742201170	1		Bushing, Column
39	MA-08401022358	1		Oil Seal
40	MA-27931515000	1		Washer
41	MA-07410004001	1		Ring
42	MA-07400002000	1		Ring
44	MA-19672255AG0	1		Lever
45	MA-A0520112060	1		Bolt
47	MA-27932754001	1		Spring
48	MA-19632257000	2		Bolt
49	MA-14212284000	1		Grip
51	MA-08301100160	4		O-Ring
52	MA-A3030112002	3		Nut
53	MA-19632259000	1		Valve, Check Includes item 54
54	MA-08301100140	3		O-Ring
55	MA-00502108063	1		Clamp
56	MA-10253429000	1		Rubber Band
57	MA-19672265AG0	1	F	Bracket, Column
	MA-19672265AG1	1	F	Bracket, Column
58	MA-F1550110025	4		Bolt
59	MA-07961025200	2		Bushing
60	MA-19632267000	1		Bolt
61	MA-00511032070	1		Band, Wire

www.mymowerparts.com

For Discount Cub Cadet Parts Call 606-678-9623 or 606-561-4983

Ref #	Part Number	Qty	S/P/F	Description
63	MA-A3130101601	1		Nut
64	MA-05200140032	1		Pin, Split
66	MA-06313117130	2		Elbow 90 Includes item 54
67	MA-07400102200	1		Ring
68	MA-07410003500	1		Ring
69	MA-07310002005	2		Liner
70	MA-19672257000	1		Collar
71	MA-19672258000	1		Liner
72	MA-31223012001	1		Spring
73	MA-08301100200	2		O-Ring
78	MA-19672267000	1	F	Bracket
79	MA-F1540108020	1	F	Bolt

www.mymowerparts.com

For Discount Cub Cadet Parts Call 606-678-9623 or 606-561-4983

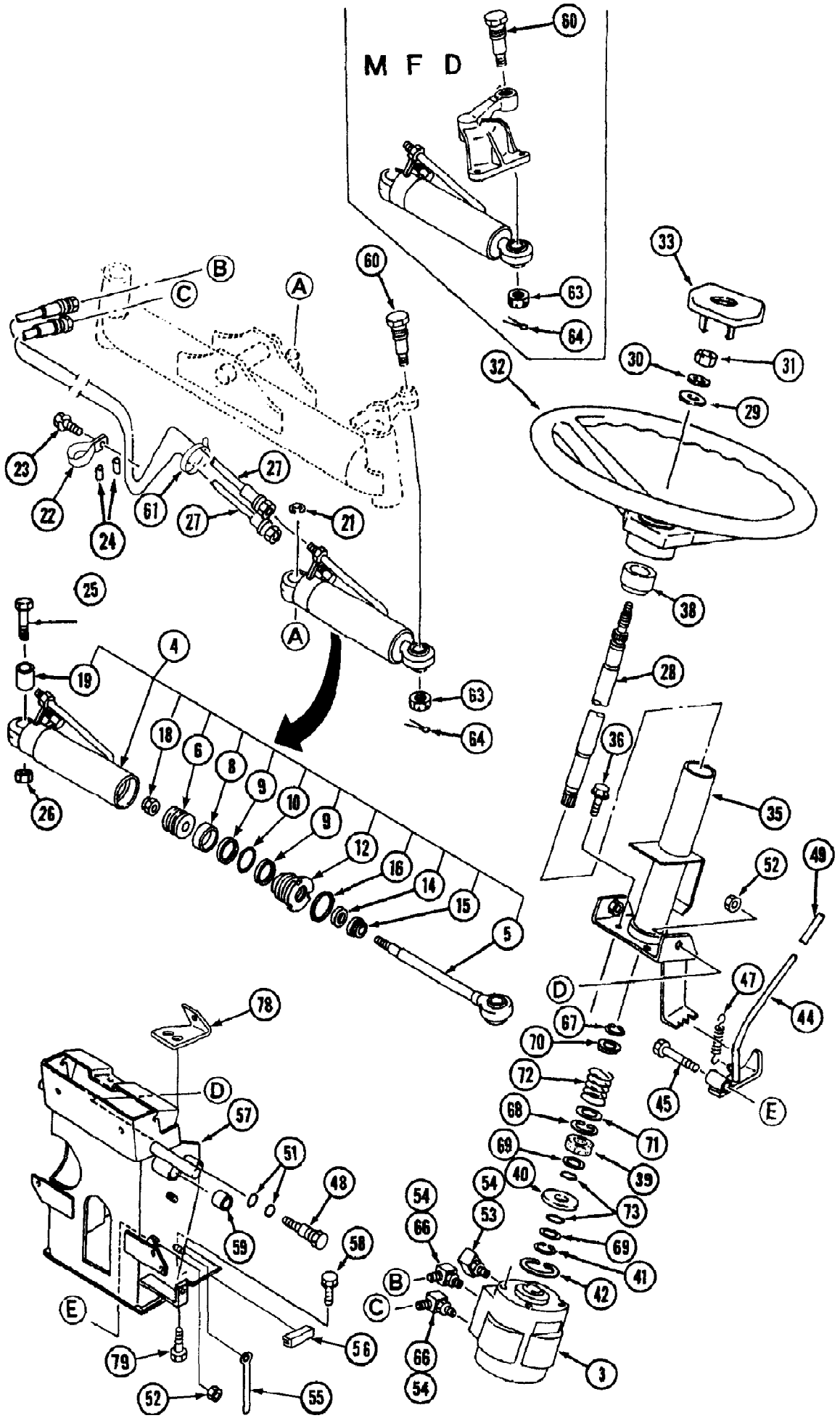

www.mymowerparts.com

For Discount Cub Cadet Parts Call 606-678-9623 or 606-561-4983

Ref #	Part Number	Qty	S/P/F	Description
3	MA-10322231001	1	/P	Steering Unit
4	MA-19672205AG0	1		Cylinder Ass'y. Includes items 5-19
5	MA-19632207AG0	1		Rod, Cylinder
6	MA-19632208000	1		Piston
	MA-19632209000	1		Kit, Seal A Includes items 8-10
8	MA-19632209100	1		Wear Ring
9	MA-08301100340	1		O-Ring
10	MA-08320100340	2		Ring
12	MA-19632211000	1		Case
	MA-19632212000	1		Kit, Seal B Includes items 14-16
14	MA-19632212100	1		Seal Rod
15	MA-19632212200	1		Seal, Dust
16	MA-08301100400	1		O-Ring
18	MA-A3530112000	1		Nut
19	MA-07963024250	1		Bushing
21		1		Ring (2WD) Not used on this product
22	MA-11812151000	1		Clamp
23	MA-H1540108020	1		Bolt
24	MA-19672226000	2		Cushion
25	MA-19632225000	1		Bolt (MFD)
26	MA-A0730124001	1		Nut (MFD)
27	MA-19672231001	2		Hose
28	MA-19672245000	1		Shaft, Steering
29	MA-03500151430	1		Washer
30	MA-A3600101402	1		Washer
31	MA-A3030114002	1		Nut
	MA-10302216000	1		Steering Ass'y. Includes items 32, 33
32	MA-10302217000	1		Steering Wheel
33	MA-10302218000	1		Center Pad
35	MA-19632252AG0	1		Column
36	MA-F1550110020	4		Bolt
38	MA-11742201170	1		Bushing, Column
39	MA-08401022358	1		Oil Seal
40	MA-27931515000	1		Washer
41	MA-07410004001	1		Ring
42	MA-07400002000	1		Ring
44	MA-19672255AG0	1		Lever
45	MA-A0520112060	1		Bolt
47	MA-27932754001	1		Spring
48	MA-19632257000	2		Bolt
49	MA-14212284000	1		Grip
51	MA-08301100160	4		O-Ring
52	MA-A3030112002	3		Nut
53	MA-19632259000	1		Valve, Check Includes item 54
54	MA-08301100140	3		O-Ring
55	MA-00502108063	1		Clamp
56	MA-10253429000	1		Rubber Band
57	MA-19672265AG0	1	F	Bracket, Column
	MA-19672265AG1	1	F	Bracket, Column
58	MA-F1550110025	4		Bolt
59	MA-07961025200	2		Bushing
60	MA-19632267000	1		Bolt
61	MA-00511032070	1		Band, Wire

www.mymowerparts.com

For Discount Cub Cadet Parts Call 606-678-9623 or 606-561-4983

Ref #	Part Number	Qty	S/P/F	Description
63	MA-A3130101601	1		Nut
64	MA-05200140032	1		Pin, Split
66	MA-06313117130	2		Elbow 90 Includes item 54
67	MA-07400102200	1		Ring
68	MA-07410003500	1		Ring
69	MA-07310002005	2		Liner
70	MA-19672257000	1		Collar
71	MA-19672258000	1		Liner
72	MA-31223012001	1		Spring
73	MA-08301100200	2		O-Ring
78	MA-19672267000	1	F	Bracket
79	MA-F1540108020	1	F	Bolt

www.mymowerparts.com

For Discount Cub Cadet Parts Call 606-678-9623 or 606-561-4983

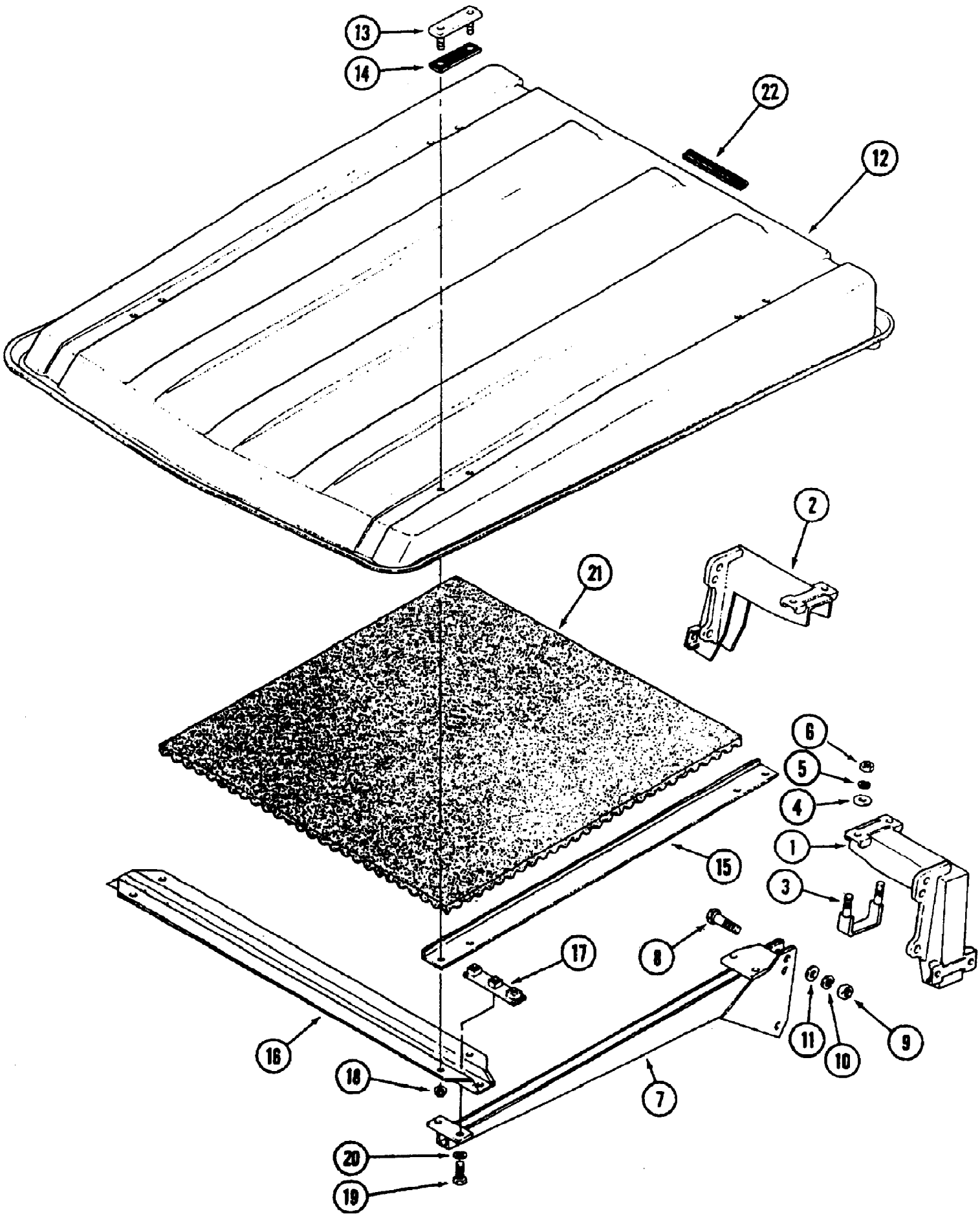

www.mymowerparts.com

For Discount Cub Cadet Parts Call 606-678-9623 or 606-561-4983

Ref #	Part Number	Qty	S/P/F	Description
1	MA-12186021AN0	1		Support L.H.
2	MA-12186023AN0	1		Support R.H.
3	MA-12186025000	4		U-Bolt
4	MA-12186029000	8		Washer
5	MA-12186030000	8		Washer
6	MA-A3030412002	8		Nut
7	MA-12186027AN0	2		Frame
8	MA-12186039000	4		Bolt
9	MA-A3030414002	4		Nut
10	MA-12186041000	4		Washer
11	MA-12186042000	4		Washer
12	MA-12186055000	1		Roof Includes 21, 22
13	MA-12186036000	4		Clamp, Roof
14	MA-12186037000	4		Packing
15	MA-12186038AN0	2		Plate
16	MA-12186032AN0	2		Frame
17	MA-12186033000	4		Clamp
18	MA-A3010410002	8		Nut
19	MA-12186044000	12		Bolt
20	MA-12186045000	20		Washer
21	MA-12186035200	1		Cushion
22	MA-12186035300	1		Trim

www.mymowerparts.com

For Discount Cub Cadet Parts Call 606-678-9623 or 606-561-4983

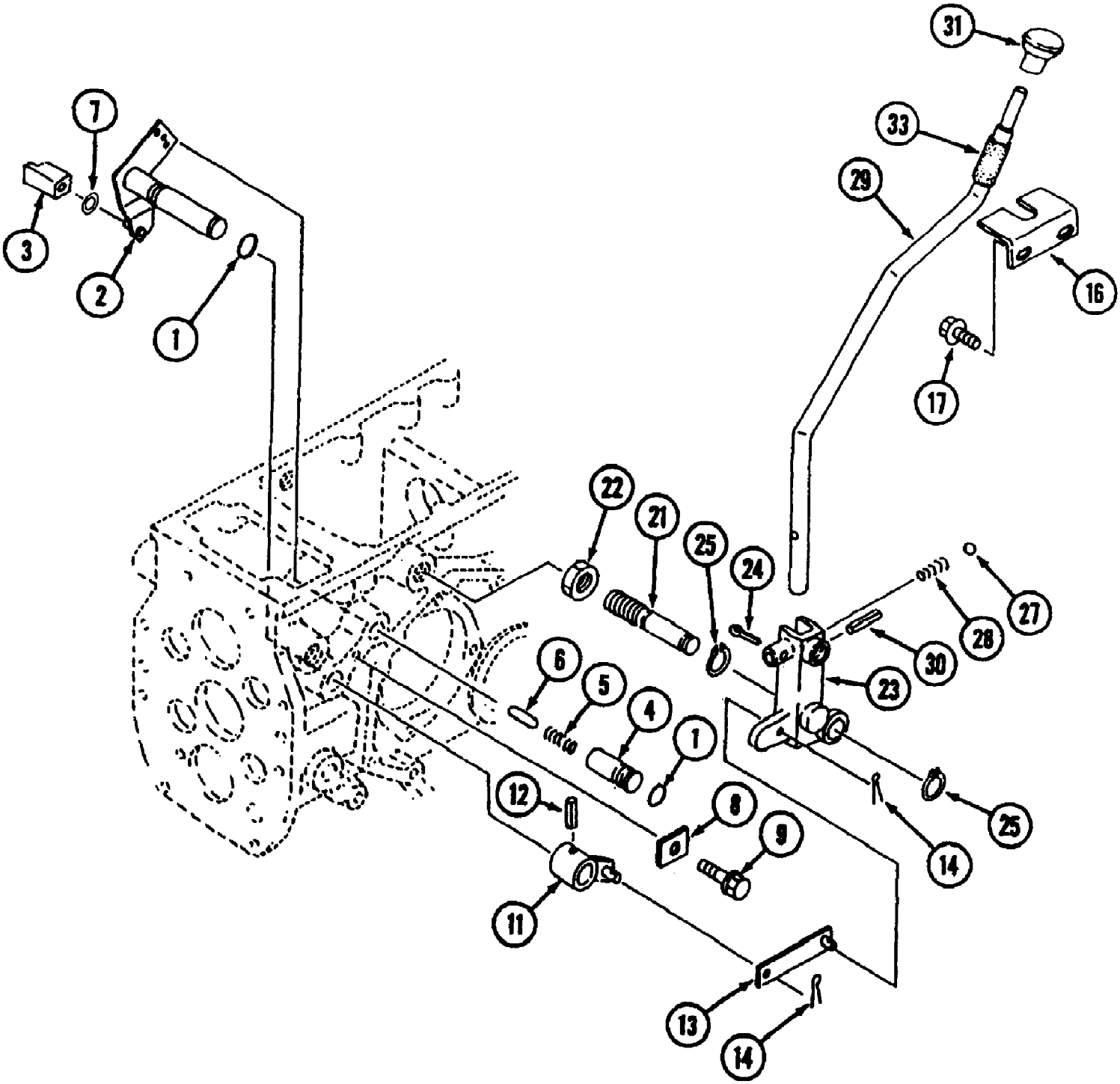

www.mymowerparts.com

For Discount Cub Cadet Parts Call 606-678-9623 or 606-561-4983

Ref #	Part Number	Qty	S/P/F	Description
1	MA-08300100160	2	/P	O-Ring
2	MA-19631721001	1	/P	Shifter, Range
3	MA-19631722000	1		Piece, Shift
4	MA-19631723000	1		Boss
5	MA-67428-01700	1		Spring
6	MA-11741737000	1		Pin
7	MA-07310001016	1	S	Liner
8	MA-19631724000	1		Plate
9	MA-F1550110020	1		Bolt
11	MA-19631725AG0	1		Arm, Range
12	MA-10191734000	1		Pin
13	MA-19631726000	1		Plate, Joint
14	MA-05200125016	2	S	Pin, Split
16	MA-19631730AG0	1		Plate, Range
17	MA-H1440106016	2	/P	Bolt
21	MA-19631727000	1		Shaft
22	MA-A3030120001	1		Nut
23	MA-19631728AG0	1		Bracket, Range
24	MA-05200130032	1		Pin, Split
25	MA-07400102000	2		Ring
27	MA-08000000900	1		Ball
28	MA-67428-01700	1		Spring
29	MA-19631729AG0	1		Lever, Range
30	MA-10311715000	1		Pin, Spring
31	MA-06960012360	1		Grip
33	MA-19632439000	1		Tube

www.mymowerparts.com

For Discount Cub Cadet Parts Call 606-678-9623 or 606-561-4983

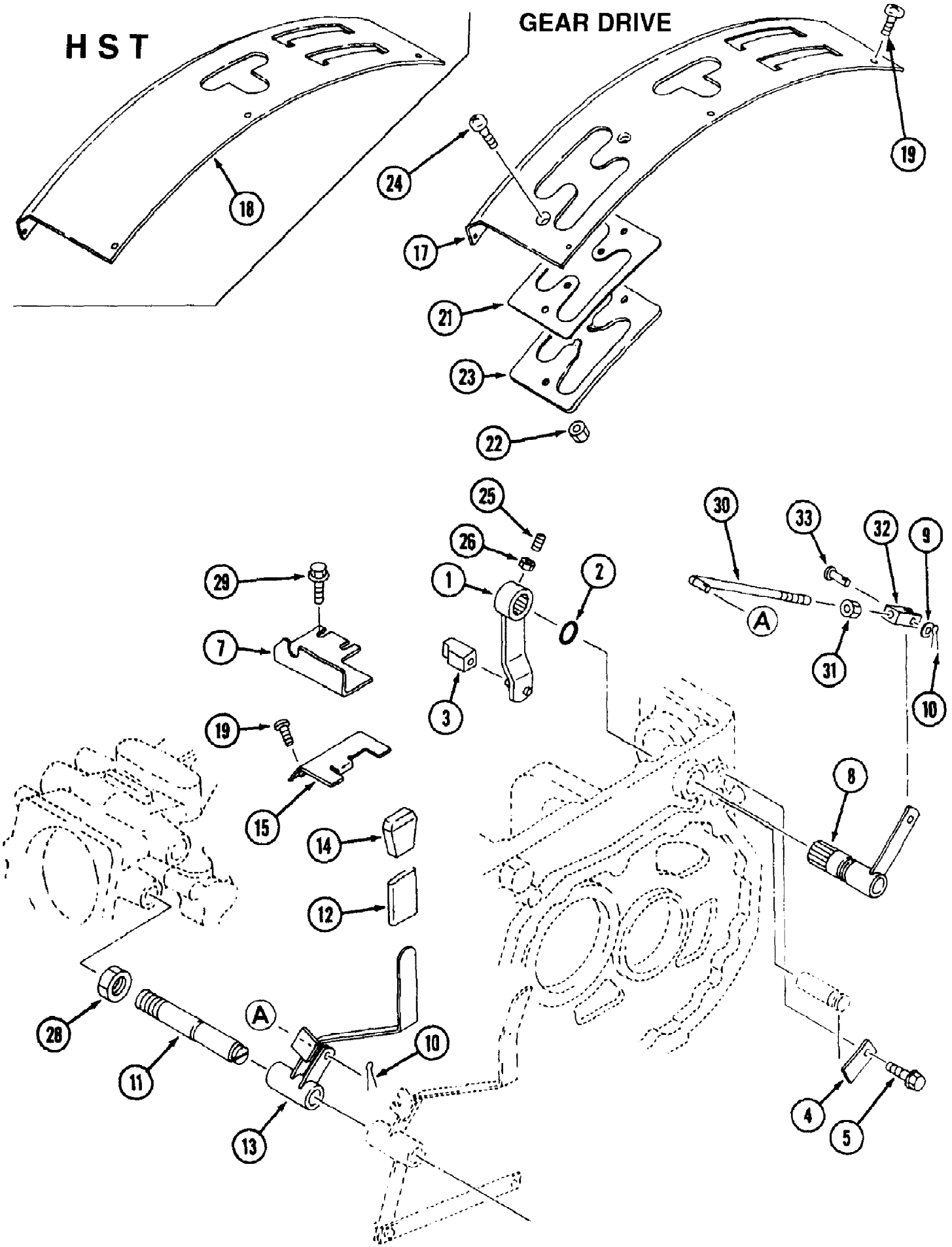

www.mymowerparts.com

For Discount Cub Cadet Parts Call 606-678-9623 or 606-561-4983

Ref #	Part Number	Qty	S/P/F	Description
1	MA-19631742000	1		Shifter, R. PTO
2	MA-08300100210	1		O-Ring
3	MA-19631743000	1		Piece, Shift
4	MA-19631741000	1		Plate
5	MA-F1550110020	1		Bolt
7	MA-19631744AG0	1		Plate, SW
8	MA-19631745AG0	1		Arm, R. PTO
9	MA-03500150822	1		Washer
10	MA-05200125016	2	S	Pin, Split
11	MA-19631746000	1		Shaft, PTO Lever
	MA-19631757AG0	1		Lever, PTO Ass'y. Includes 12, 13
12	MA-19631658000	1		Tube
13	MA-19631747AG0	1		Lever, R. PTO
14	MA-19061731000	1		Grip
15	MA-19631748AG0	1		Plate Guide
17	MA-19631749BD0	1	/P	Lever, Guide L.H. (Gear)
18		1		Lever, Guide L.H. (HST) Not used on this product
19	MA-A2520706012	7		Screw
21	MA-19631755000	1		Guide, Rubber (Gear)
22	MA-F3000105001	2		Nut (Gear)
23	MA-19631756AG0	1		Plate (Gear)
24	MA-A2220105016	2		Screw (Gear)
25	MA-HA130201000	1		Screw
26	MA-A3010108002	1		Nut
28	MA-A3030120001	1		Nut
29	MA-H1540108020	2		Bolt
30	MA-10321759000	1		Joint
31	MA-A3030110002	1		Nut
32	MA-19041269000	1		Joint
33	MA-05620108025	1		Pin, Clevis

www.mymowerparts.com

For Discount Cub Cadet Parts Call 606-678-9623 or 606-561-4983

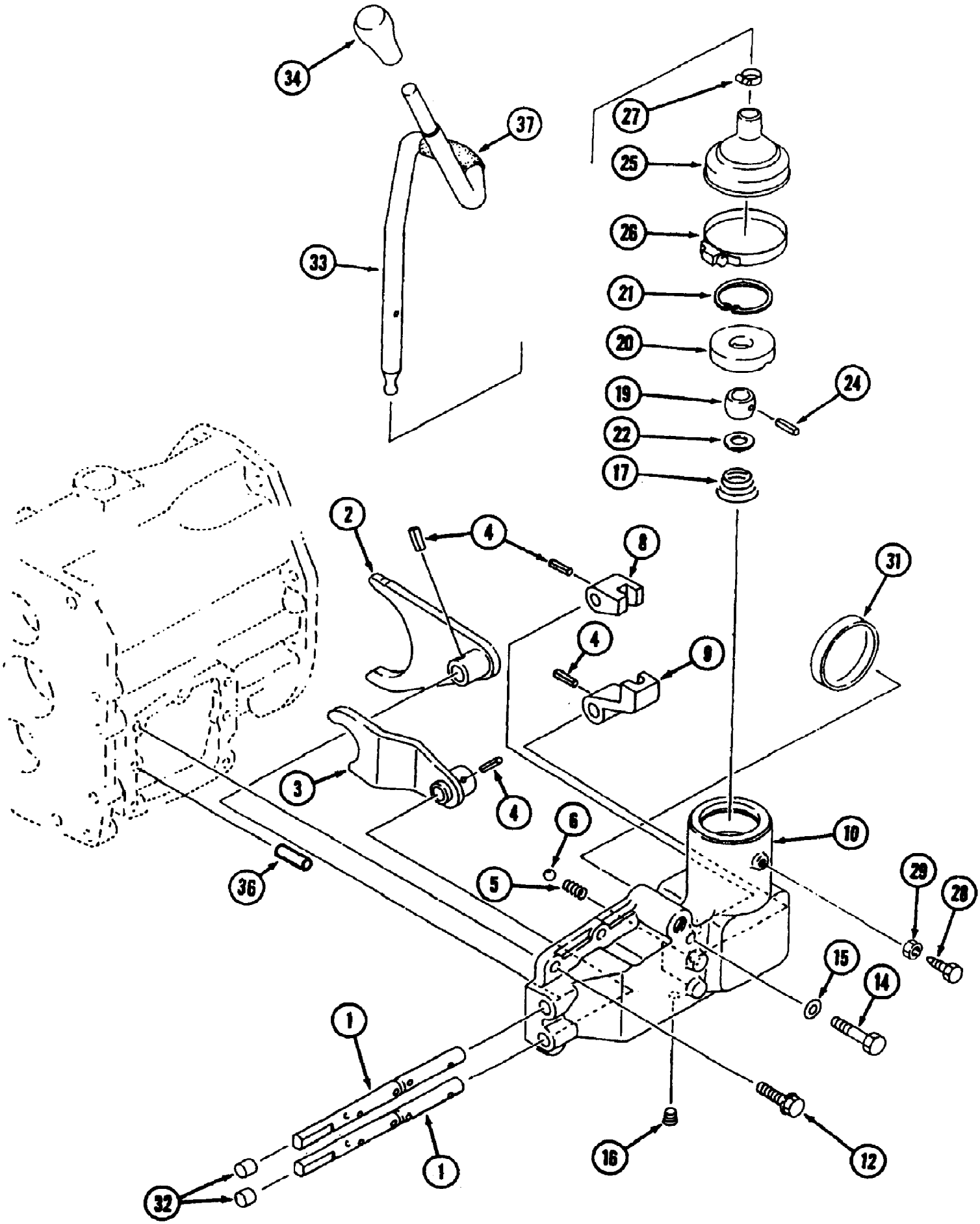

www.mymowerparts.com

For Discount Cub Cadet Parts Call 606-678-9623 or 606-561-4983

Ref #	Part Number	Qty	S/P/F	Description
1	MA-19631711001	2		Rail
2	MA-19631713000	1		Fork, 1-R
3	MA-19631714000	1		Fork, 2-3
4	MA-05500006025	4		Pin, Spring
5	MA-67428-01700	2		Spring
6	MA-08000000900	4		Ball
8	MA-19631715000	1		Adapter, A
9	MA-19631716000	1		Adapter, B
10	MA-19631717AG0	1		Cover, Control
12	MA-F1550110030	4		Bolt
14	MA-A0550110070	1		Bolt
15	MA-A3600101002	1	/P	Washer
16	MA-A6010A01300	1		Plug
17	MA-11931796000	1		Spring
19	MA-10311725000	1		Ball
20	MA-19631754000	1		Boss
21	MA-07410005501	1		Ring
22	MA-14152517000	1		Washer
24	MA-10311715000	1		Pin, Spring
25	MA-10311727000	1		Cover, Dust
26	MA-10311728000	1		Clamp
27	MA-00501100220	1		Clamp, Hose
28	MA-10311729000	1		Bolt
29	MA-A3010108002	1		Nut
31	MA-08340072100	1		Seal, Cap
32	MA-08340016050	2		Seal, Cap
33	MA-19631718AG0	1		Lever, Main Ass'y. Includes 34, 37
34	MA-06930014460	1		Grip
36	MA-05401010020	2		Pin, Dowel
37	MA-19631658000	1		Tube

www.mymowerparts.com

For Discount Cub Cadet Parts Call 606-678-9623 or 606-561-4983

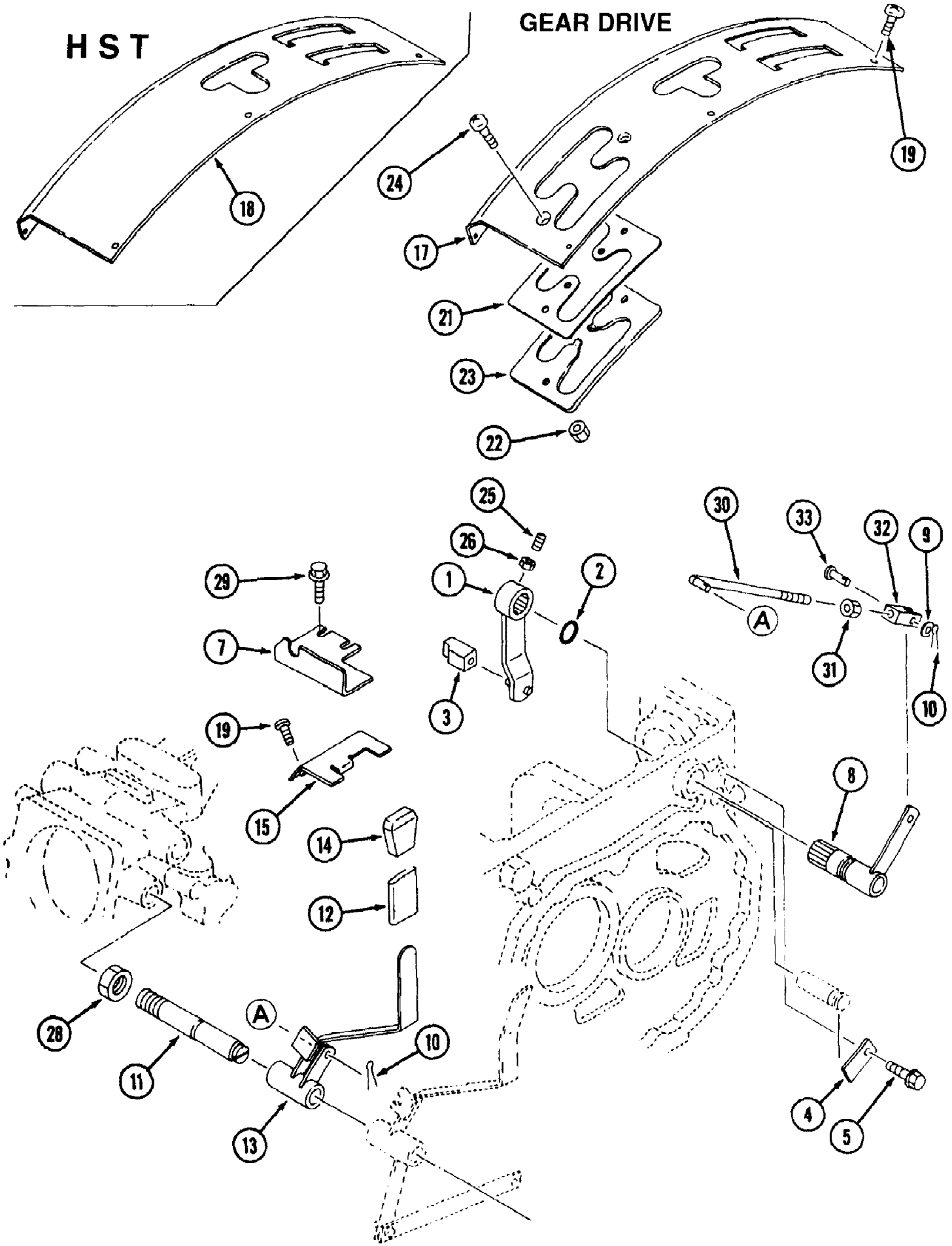

www.mymowerparts.com

For Discount Cub Cadet Parts Call 606-678-9623 or 606-561-4983

Ref #	Part Number	Qty	S/P/F	Description
1	MA-19631742000	1		Shifter, R. PTO
2	MA-08300100210	1		O-Ring
3	MA-19631743000	1		Piece, Shift
4	MA-19631741000	1		Plate
5	MA-F1550110020	1		Bolt
7	MA-19631744AG0	1		Plate, SW
8	MA-19631745AG0	1		Arm, R. PTO
9	MA-03500150822	1		Washer
10	MA-05200125016	2	S	Pin, Split
11	MA-19631746000	1		Shaft, PTO Lever
	MA-19631757AG0	1		Lever, PTO Ass'y. Includes 12, 13
12	MA-19631658000	1		Tube
13	MA-19631747AG0	1		Lever, R. PTO
14	MA-19061731000	1		Grip
15	MA-19631748AG0	1		Plate Guide
17		1		Lever, Guide L.H. (Gear) Not used on this product
18	MA-19631752BD0	1	/P	Lever, Guide L.H. (HST)
19	MA-A2520706012	7		Screw
21		1		Guide, Rubber (Gear) Not used on this product
22		1		Nut (Gear) Not used on this product
23		1		Plate (Gear) Not used on this product
24		1		Screw (Gear) Not used on this product
25	MA-HA130201000	1		Screw
26	MA-A3010108002	1		Nut
28	MA-A3030120001	1		Nut
29	MA-H1540108020	2		Bolt
30	MA-10321759000	1		Joint
31	MA-A3030110002	1		Nut
32	MA-19041269000	1		Joint
33	MA-05620108025	1		Pin, Clevis

www.mymowerparts.com

For Discount Cub Cadet Parts Call 606-678-9623 or 606-561-4983

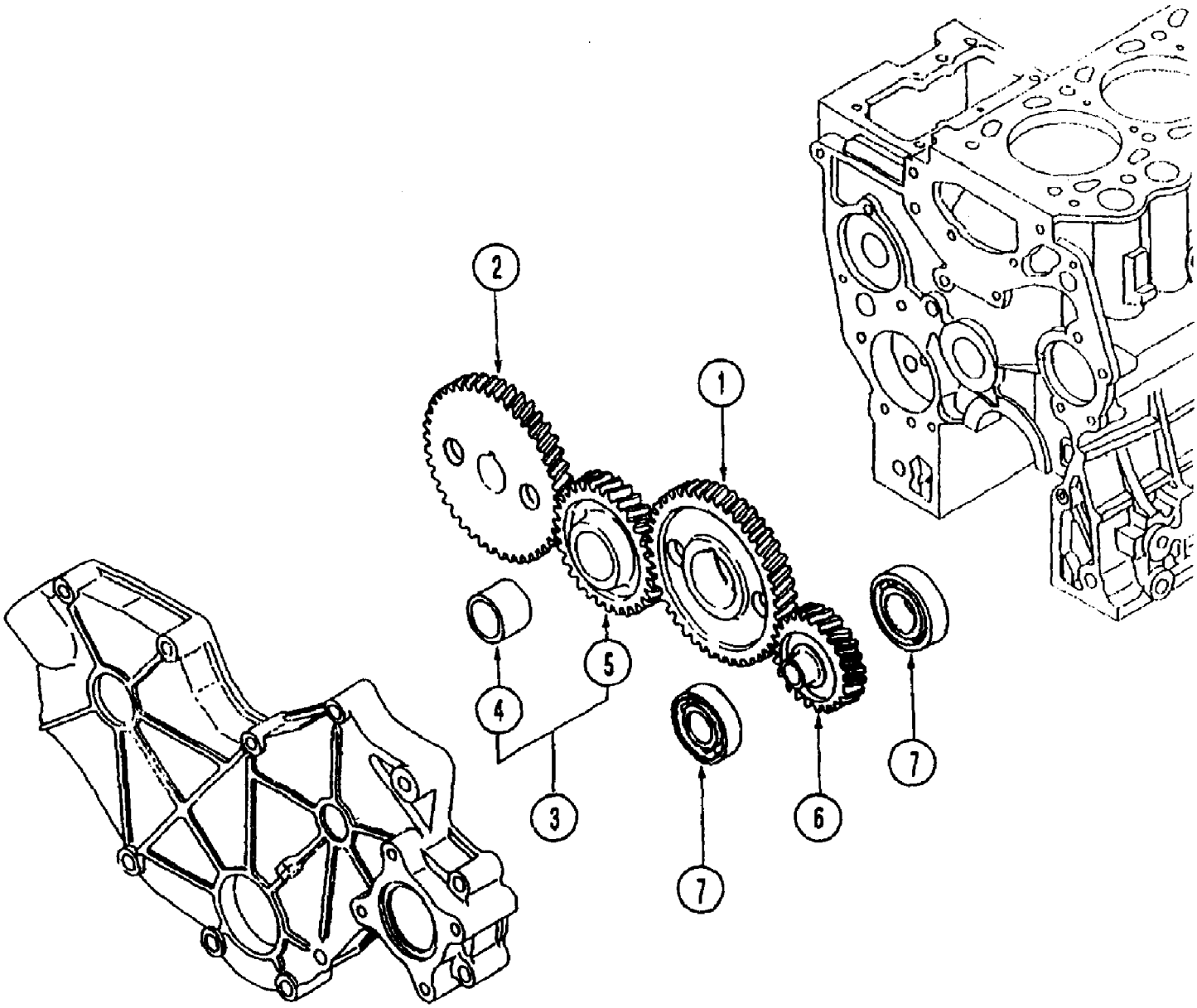

www.mymowerparts.com

For Discount Cub Cadet Parts Call 606-678-9623 or 606-561-4983

Ref #	Part Number	Qty	S/P/F	Description
1	MA-31A23-01403	1	S	Gear,Camshaft
2	MA-31A23-10100	1		Gear, Inj. Pump
3	MA-31A23-01020	1		Gear Ass'y., Idler
4		1		Bushing, Idler
5		1		Gear, Idler
6	MA-31A23-01500	1		Gear, Press.Oil Pump
7	MA-MD712517	2		Bearing, Rear

www.mymowerparts.com

For Discount Cub Cadet Parts Call 606-678-9623 or 606-561-4983

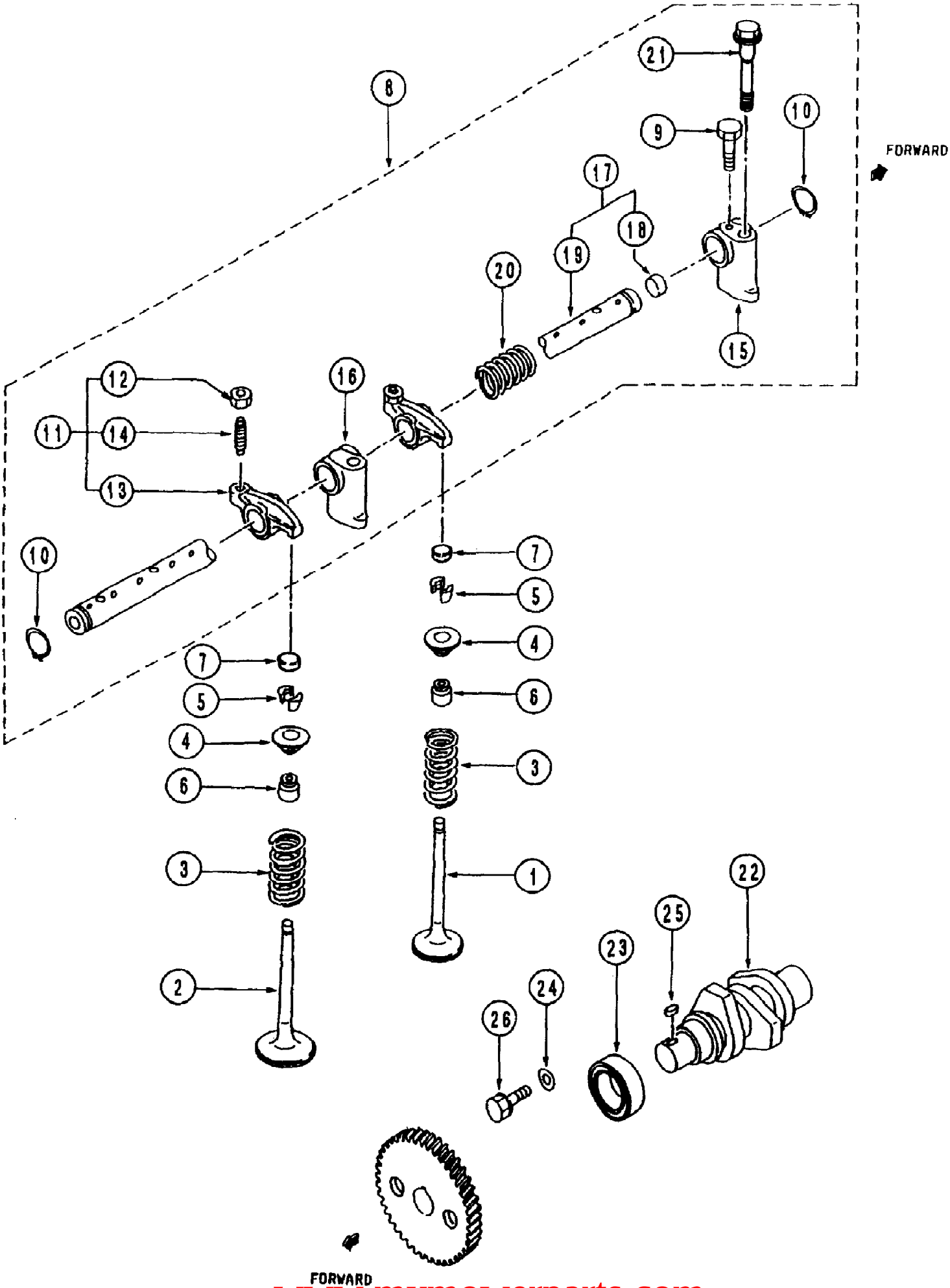

www.mymowerparts.com

For Discount Cub Cadet Parts Call 606-678-9623 or 606-561-4983

Ref #	Part Number	Qty	S/P/F	Description
1	MA-31A04-30100	3	S	Valve, Inlet
2	MA-31A04-20200	3	S	Valve, Exhaust
3	MA-31A04-01301	6		Spring, Valve
4	MA-MM433306	6		Retainer
5	MA-MD016483	12		Valve, Lock
6	MA-MD115472	6		Seal, Valve Stem
7	MA-31A04-00700	6		Cap, Valve
8		1		Rocker & Shaft Ass'y. Furnish Component Parts
9	MA-F1035-05010	1		Bolt
10	MA-07400001900	2	/P	Ring, Snap
11	MA-31A04-11023	6		Rocker Ass'y.
12	MA-F2325-08000	6		Nut, Jam
13		6		Rocker
14	MA-32A04-02400	6	S	Screw, Rocker
15	MA-31A04-34100	1		Bracket, Rocker Shaft
16	MA-31A04-34300	2		Bracket, Rocker Shaft
17	MA-31B04-01010	1		Shaft
18	MA-MD021204	2		Cap, Sealing
19		1		Shaft, Rocker
20	MA-32C04-04500	2		Spring, Rocker
21	MA-32C04-06100	3	S	Bolt, Rocker Bracket
22	MA-31B65-01200	1		Shaft, Fuel Inj. Pump
23	MA-MD703856	1		Bearing, Ball
24	MA-03500140818	1		Washer
25	MA-MF476018	1		Key, Sunk
26	MA-F1540108016	1		Bolt, W/Washer

www.mymowerparts.com

For Discount Cub Cadet Parts Call 606-678-9623 or 606-561-4983

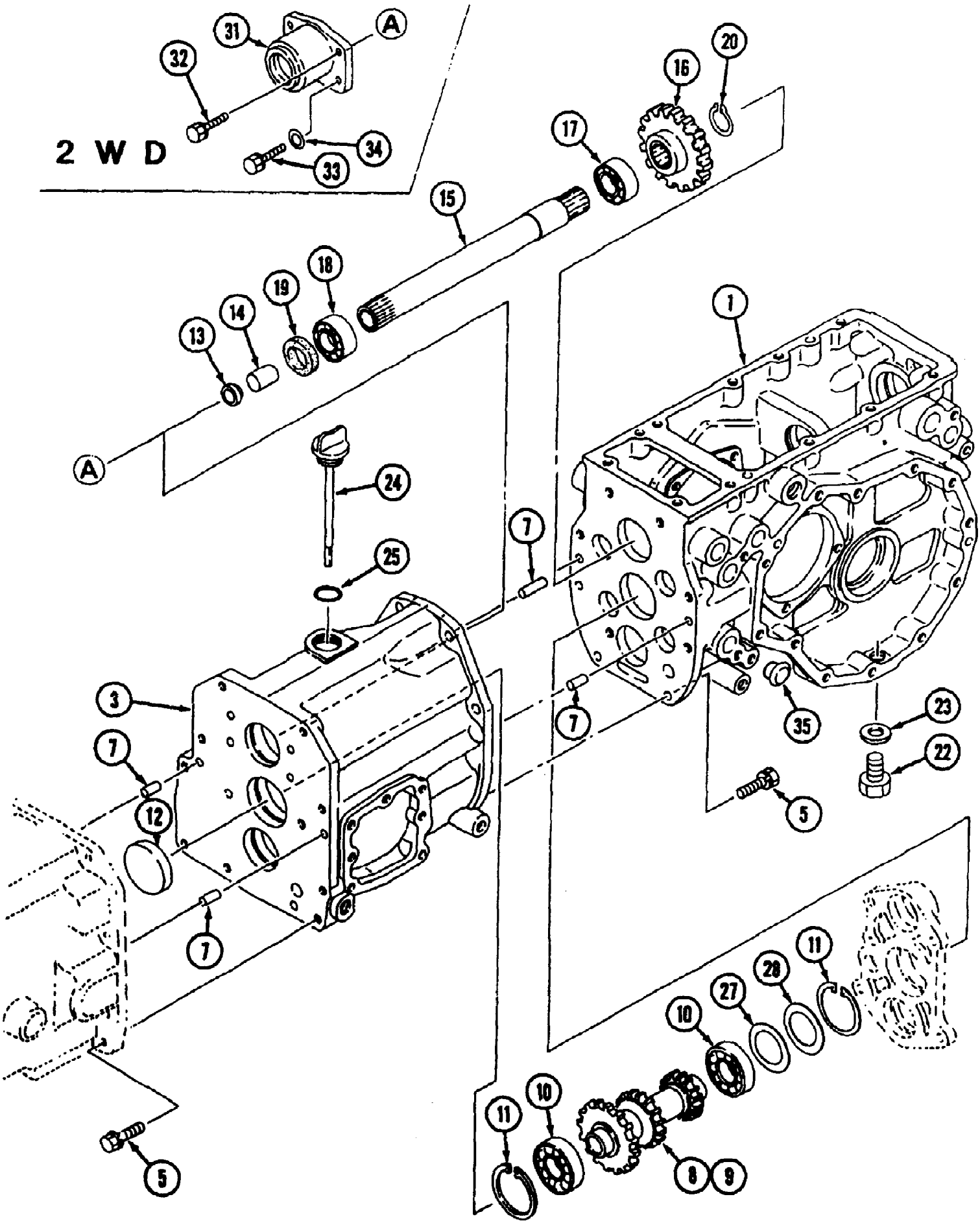

www.mymowerparts.com

For Discount Cub Cadet Parts Call 606-678-9623 or 606-561-4983

Ref #	Part Number	Qty	S/P/F	Description
1	MA-19631211AG1	1		Case, T/M
3	MA-19631267AG1	1		Case Center
5	MA-F1550110035	16		Bolt
7	MA-05401010020	4		Pin, Dowel
8	MA-19631236000	1		Gear 20-26-35T (2WD)
9		1		Gear 20-26-35T (MFD) Not used on this product
10	MA-07500062060	2		Bearing
11	MA-07410006200	2		Ring
12	MA-08340062100	1		Seal, Cap (2WD)
13	MA-19631276000	1		Seal, Oil
14	MA-07963020200	1		Bushing
15	MA-19631269000	1		Shaft, Drive
16	MA-19631271000	1		Gear 24T
17	MA-07500062070	1		Bearing
18	MA-07500560074	1		Bearing
19	MA-08401035508	1		Seal, Oil
20	MA-07400003500	1	S	Ring
22	MA-F5000-16000	2		Plug
23	MA-08331001600	2		Seal, Washer
24	MA-19812472002	1		Plug, Oiling
25	MA-08300100280	1		O-Ring
	MA-10211318000	1		Liner Set Includes 27-28
27	MA-07300006201	AR		Liner t=0.15
28	MA-07300006204	AR		Liner t=0.4
31	MA-19631277000	1		Cover (2WD)
32	MA-F1550110030	2		Bolt (2WD)
33	MA-69542-64700	2		Bolt (2WD)
34	MA-A3600101002	2	/P	Washer (2WD)
35	MA-08340020070	1		Seal, Cap

www.mymowerparts.com

For Discount Cub Cadet Parts Call 606-678-9623 or 606-561-4983

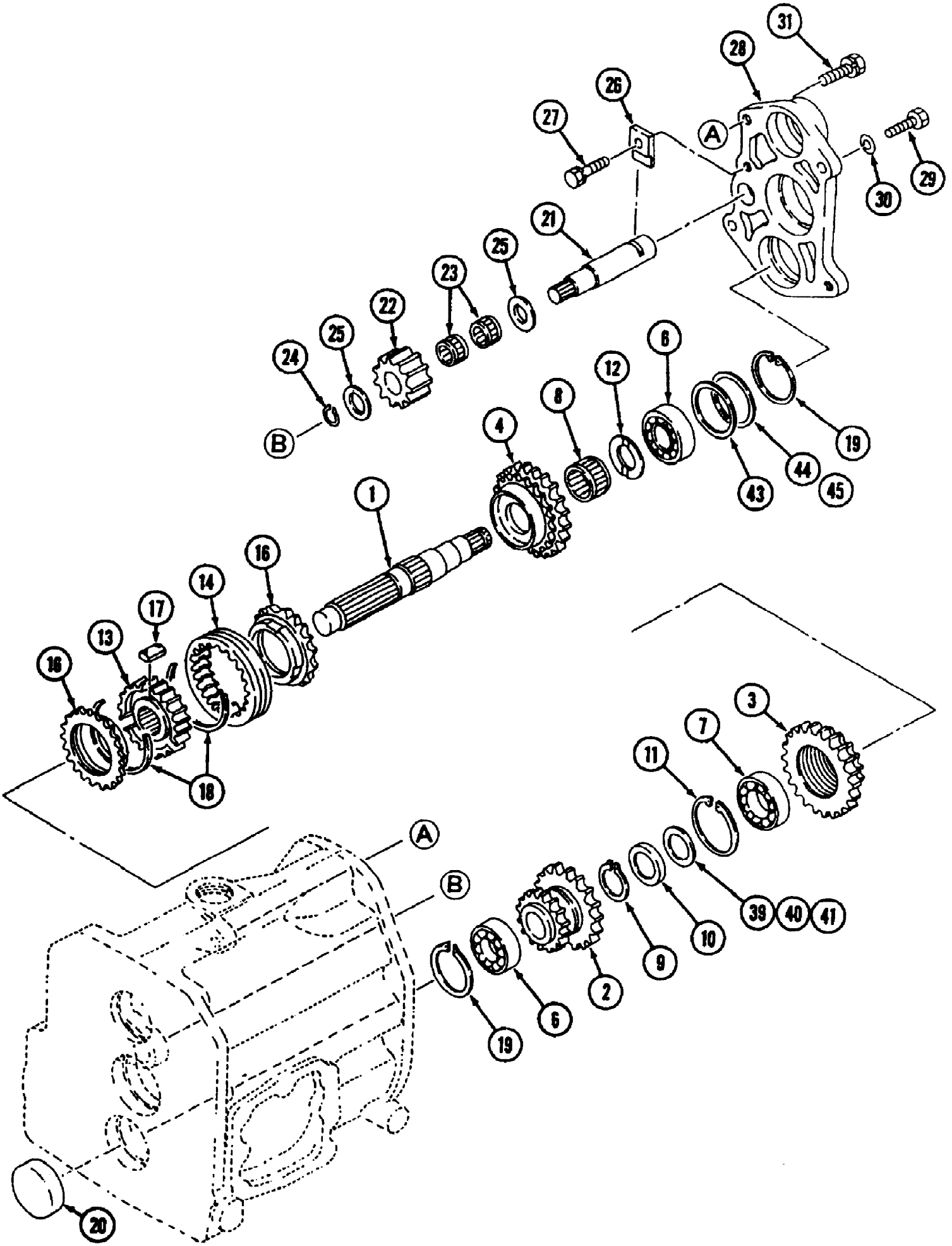

www.mymowerparts.com

For Discount Cub Cadet Parts Call 606-678-9623 or 606-561-4983

Ref #	Part Number	Qty	S/P/F	Description
1	MA-19631219000	1		Shaft,Main Change
2	MA-19631221000	1		Gear, 22-30T
3	MA-19631222000	1		Gear, 36T Back
4	MA-19631223000	1		Gear, 36T
6	MA-07500062050	2		Bearing
7	MA-07500060060	1		Bearing
8	MA-07802303520	1		Bearing
9	MA-07400003000	1	/P	Ring
10	MA-13552166000	1		Collar
11	MA-07410005501	1		Ring
12	MA-10301328000	1		Liner
13	MA-10311286001	1		Hub
14	MA-69526-01100	1		Sleeve
16	MA-68226-03500	2		Ring
17	MA-68226-03600	3		Piece
18	MA-68226-03700	2		Spring
19	MA-07410005201	2	/P	Ring
20	MA-08340052100	1		Seal Cap (2WD)
21	MA-19631224000	1		Shaft Back
22	MA-19631226000	1		Gear, 19T
23	MA-07802202612	2		Bearing
24	MA-07400002000	1		Ring
25	MA-13521406000	2		Liner
26	MA-10311328000	1		Plate
27	MA-F1540108020	1		Bolt
28	MA-19631272000	1		Cover (Dual)
29	MA-69542-64700	2		Bolt
30	MA-A3600101002	2	/P	Washer
31	MA-F1550110030	2		Bolt
	MA-19631257000	1		Liner Set Includes 39-41
39	MA-07300004002	AR		Liner t=0.2
40	MA-07300004004	AR		Liner t=0.4
41	MA-07300004008	AR		Liner t=0.8
	MA-19632139000	1		Liner Set Includes 43-45
43	MA-07300005201	AR		Liner t=0.15
44	MA-07300005202	AR		Liner t=0.2
45	MA-07300005203	AR		Liner t=0.3

www.mymowerparts.com

For Discount Cub Cadet Parts Call 606-678-9623 or 606-561-4983

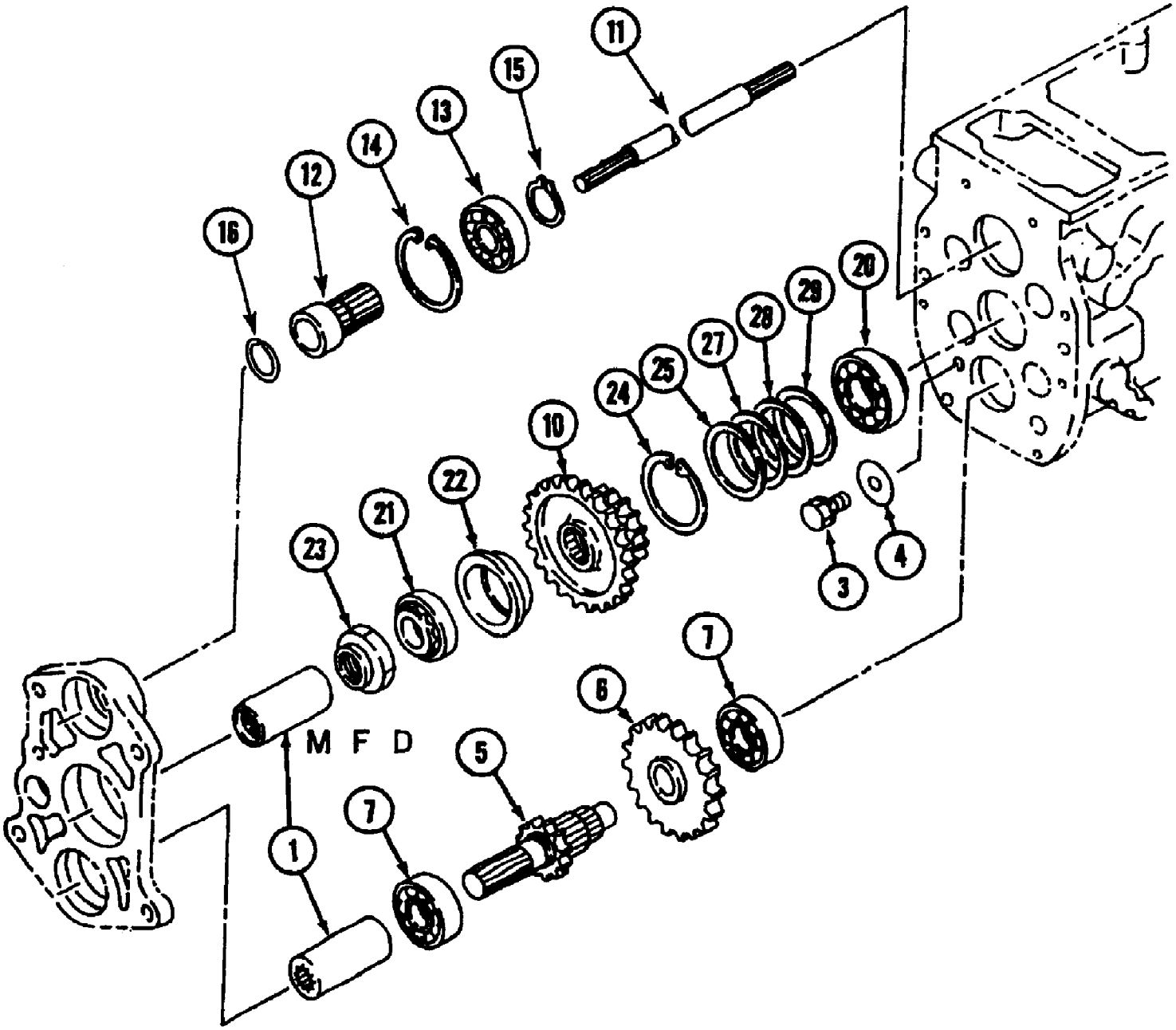

www.mymowerparts.com

For Discount Cub Cadet Parts Call 606-678-9623 or 606-561-4983

Ref #	Part Number	Qty	S/P/F	Description
1	MA-19631232000	1		Joint
3	MA-F1550110020	1		Bolt
4	MA-03500161032	1		Washer
5	MA-19631237000	1		Shaft, Sub Change
6	MA-19631238000	1		Gear,34T
7	MA-07500063040	2		Bearing
10	MA-19631239000	1		Gear, 22-42T
11	MA-19631273000	1		Shaft, Main
12	MA-19631275000	1		Joint
13	MA-07500060050	1		Bearing
14	MA-07410004701	1	/P	Ring
15	MA-07400002500	1	/P	Ring
16	MA-10311363001	1		Ring
20	MA-19631256000	1		Bearing
21	MA-07700130205	1		Bearing
22	MA-11351302011	1		Holder
23	MA-11741273000	1		Nut (M25)
24	MA-11351322000	1		Ring, Snap
25	MA-11351317011	1		Shim
	MA-10191309000	1		Shim Set, Drive Pinion Includes 27-29
27	MA-11351315011	AR		Shim
28	MA-11351316011	AR		Shim
29	MA-11351317011	AR		Shim

www.mymowerparts.com

For Discount Cub Cadet Parts Call 606-678-9623 or 606-561-4983

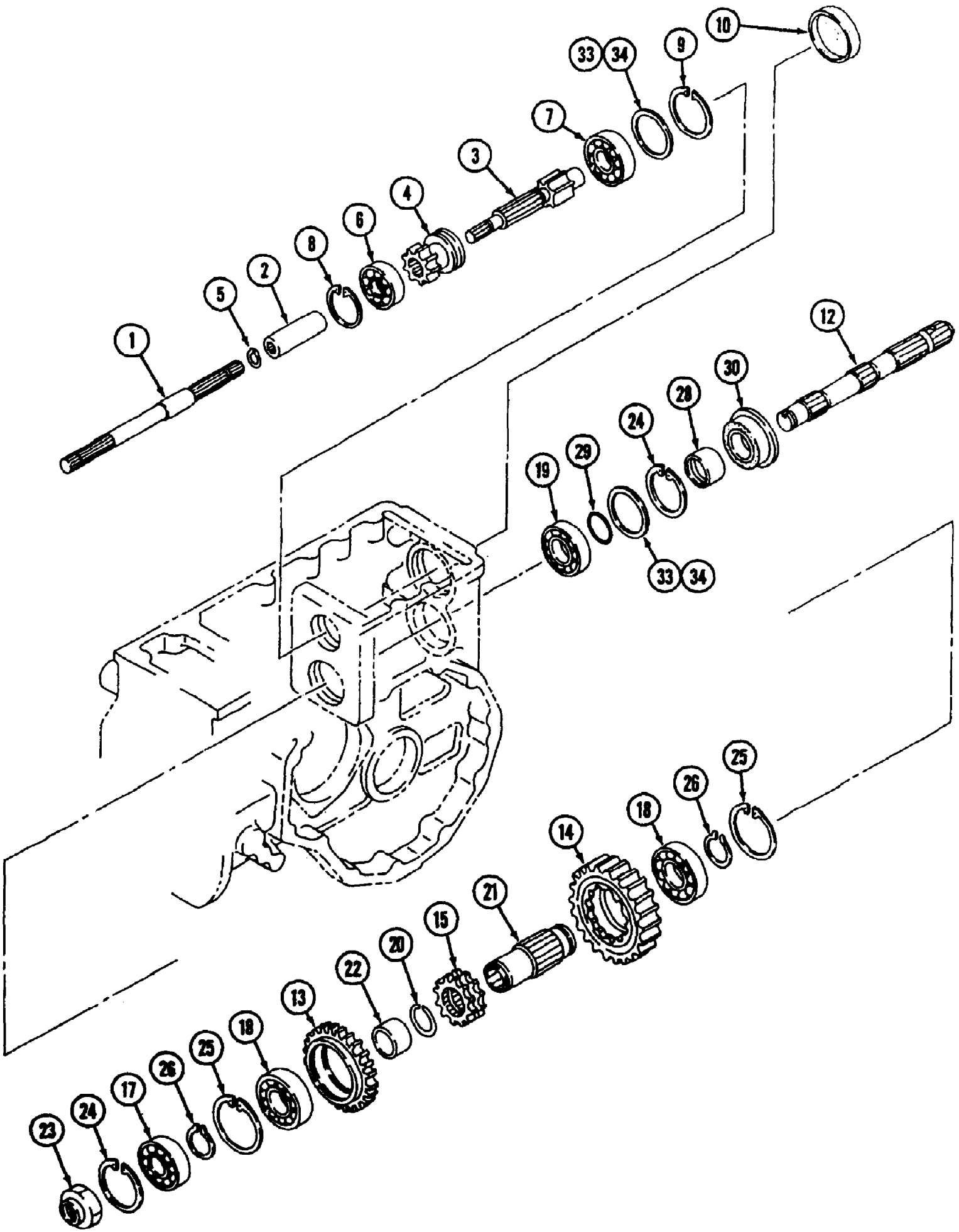

www.mymowerparts.com

For Discount Cub Cadet Parts Call 606-678-9623 or 606-561-4983

Ref #	Part Number	Qty	S/P/F	Description
1	MA-19631274000	1-1		Shaft
2	MA-19631242000	1-1		Joint
3	MA-19631243000	1-1		Shaft, PTO Drive
4	MA-19631244000	1-1		Gear, 17T
5	MA-07400001600	1-1	/P	Ring
6	MA-07500063040	1-1		Bearing
7	MA-07500063050	1-1		Bearing
8	MA-07410005201	1-1	/P	Ring
9	MA-07410006200	1-1		Ring
10	MA-08340062100	1-1		Seal Cap
12	MA-19631246000	1-1		Shaft, PTO
13	MA-19631247000	1-1		Gear, 41T
14	MA-19631248000	1-1		Gear, 48T
15	MA-19631249000	1-1		Gear Clutch
17	MA-07500063050	1-1		Bearing
18	MA-07500062070	2-2		Bearing
19	MA-07500062060	1-1		Bearing
20	MA-19631253000	1-1		Ring
21	MA-19631251000	1-1		Boss Spline
22	MA-19631252000	1-1		Collar
23	MA-11741273000	1-1		Nut (M25)
24	MA-07410006200	2-2		Ring
25	MA-07410007201	2-2		Ring
26	MA-07400003500	2-2	S	Ring
28	MA-10251405000	1-1		Bushing
29	MA-08300100300	1-1		O-Ring
30	MA-10211314000	1-1		Seal, Oil
	MA-10211318000	1-1		Liner Set Includes 33-35
33	MA-07300006201	AR-AR		Liner
34	MA-07300006204	AR-AR		Liner

www.mymowerparts.com

For Discount Cub Cadet Parts Call 606-678-9623 or 606-561-4983

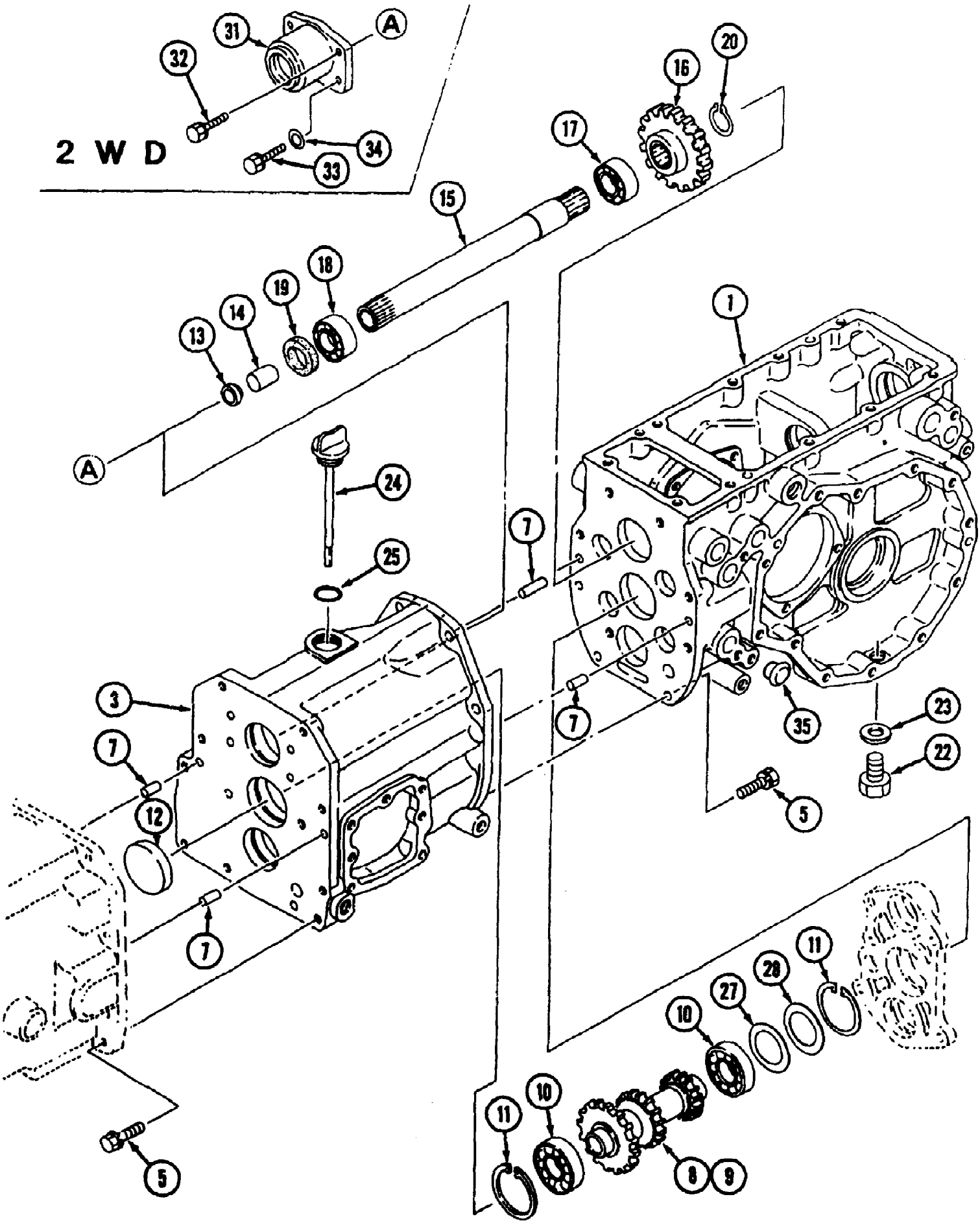

www.mymowerparts.com

For Discount Cub Cadet Parts Call 606-678-9623 or 606-561-4983

Ref #	Part Number	Qty	S/P/F	Description
1	MA-19631211AG1	1		Case, T/M
3	MA-19631267AG1	1		Case Center
5	MA-F1550110035	16		Bolt
7	MA-05401010020	4		Pin, Dowel
8		1		Gear 20-26-35T (2WD) Not used on this product
9	MA-19631218000	1		Gear 20-26-35T (MFD)
10	MA-07500062060	2		Bearing
11	MA-07410006200	2		Ring
12		1		Seal, Cap (2WD) Not used on this product
13	MA-19631276000	1		Seal, Oil
14	MA-07963020200	1		Bushing
15	MA-19631269000	1		Shaft, Drive
16	MA-19631271000	1		Gear 24T
17	MA-07500062070	1		Bearing
18	MA-07500560074	1		Bearing
19	MA-08401035508	1		Seal, Oil
20	MA-07400003500	1	S	Ring
22	MA-F5000-16000	2		Plug
23	MA-08331001600	2		Seal, Washer
24	MA-19812472002	1		Plug, Oiling
25	MA-08300100280	1		O-Ring
	MA-10211318000	1		Liner Set Includes 27-28
27	MA-07300006201	AR		Liner t=0.15
28	MA-07300006204	AR		Liner t=0.4
31		1		Cover (2WD) Not used on this product
32		1		Bolt (2WD) Not used on this product
33		1		Bolt (2WD) Not used on this product
34		1		Washer (2WD) Not used on this product
35	MA-08340020070	1		Seal, Cap

www.mymowerparts.com

For Discount Cub Cadet Parts Call 606-678-9623 or 606-561-4983

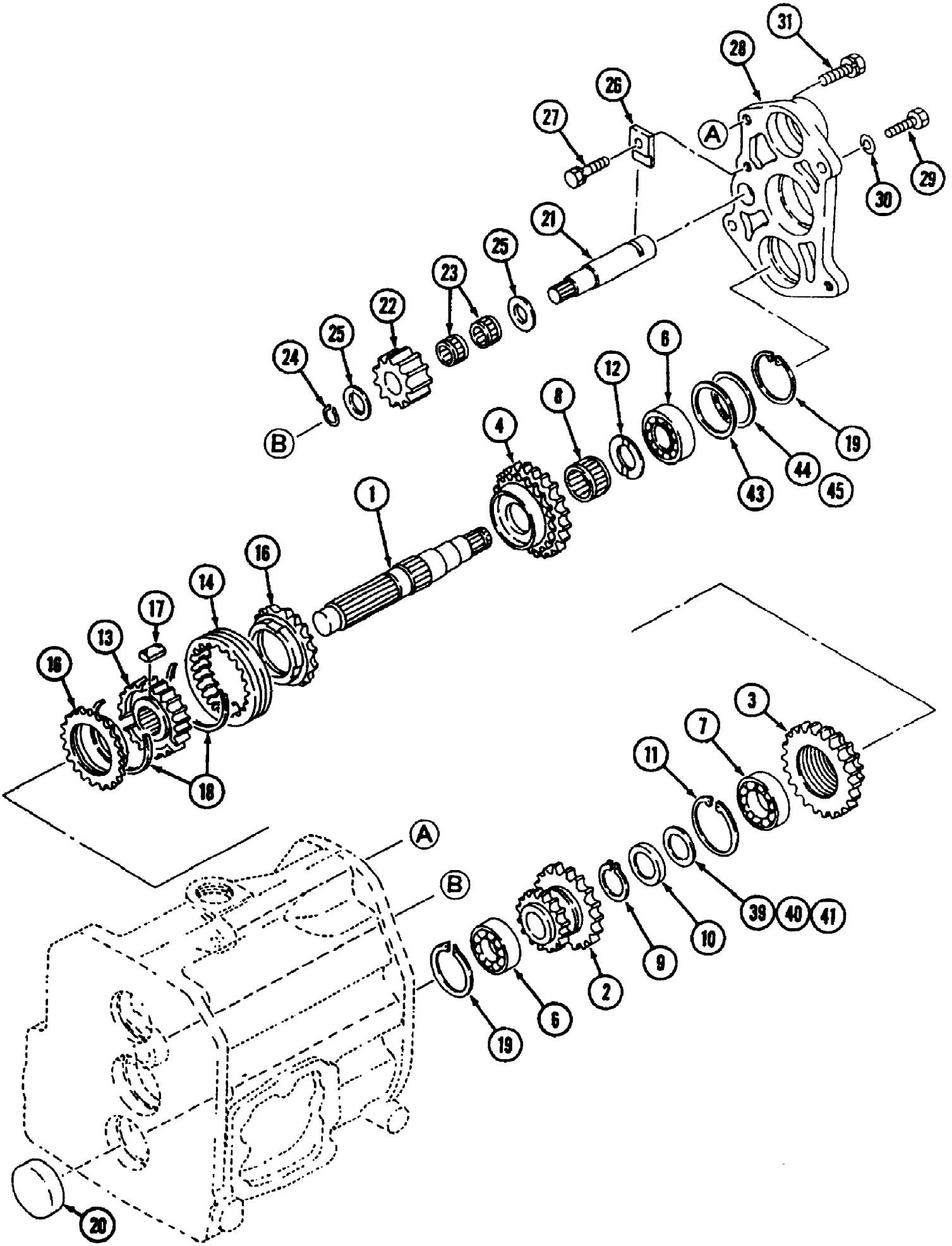

www.mymowerparts.com

For Discount Cub Cadet Parts Call 606-678-9623 or 606-561-4983

Ref #	Part Number	Qty	S/P/F	Description
1	MA-19631219000	1		Shaft,Main Change
2	MA-19631221000	1		Gear, 22-30T
3	MA-19631222000	1		Gear, 36T Back
4	MA-19631223000	1		Gear, 36T
6	MA-07500062050	2		Bearing
7	MA-07500060060	1		Bearing
8	MA-07802303520	1		Bearing
9	MA-07400003000	1	/P	Ring
10	MA-13552166000	1		Collar
11	MA-07410005501	1		Ring
12	MA-10301328000	1		Liner
13	MA-10311286001	1		Hub
14	MA-69526-01100	1		Sleeve
16	MA-68226-03500	2		Ring
17	MA-68226-03600	3		Piece
18	MA-68226-03700	2		Spring
19	MA-07410005201	2	/P	Ring
20		1		Seal Cap (2WD) Not used on this product
21	MA-19631224000	1		Shaft Back
22	MA-19631226000	1		Gear, 19T
23	MA-07802202612	2		Bearing
24	MA-07400002000	1		Ring
25	MA-13521406000	2		Liner
26	MA-10311328000	1		Plate
27	MA-F1540108020	1		Bolt
28	MA-19631272000	1		Cover (Dual)
29	MA-69542-64700	2		Bolt
30	MA-A3600101002	2	/P	Washer
31	MA-F1550110030	2		Bolt
	MA-19631257000	1		Liner Set Includes 39-41
39	MA-07300004002	AR		Liner t=0.2
40	MA-07300004004	AR		Liner t=0.4
41	MA-07300004008	AR		Liner t=0.8
	MA-19632139000	1		Liner Set Includes 43-45
43	MA-07300005201	AR		Liner t=0.15
44	MA-07300005202	AR		Liner t=0.2
45	MA-07300005203	AR		Liner t=0.3

www.mymowerparts.com

For Discount Cub Cadet Parts Call 606-678-9623 or 606-561-4983

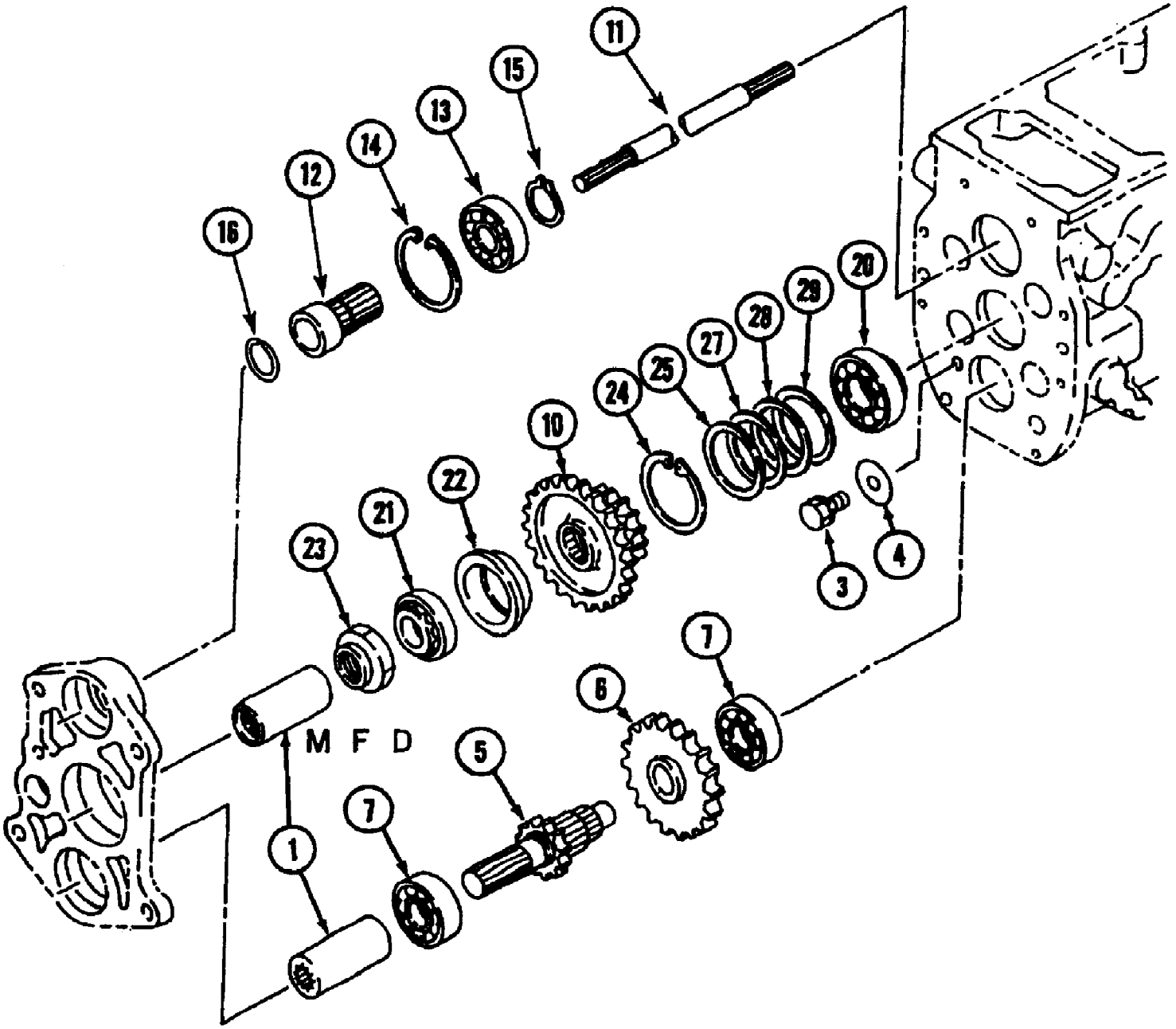

www.mymowerparts.com

For Discount Cub Cadet Parts Call 606-678-9623 or 606-561-4983

Ref #	Part Number	Qty	S/P/F	Description
1	MA-19631232000	2		Joint
3	MA-F1550110020	1		Bolt
4	MA-03500161032	1		Washer
5	MA-19631237000	1		Shaft, Sub Change
6	MA-19631238000	1		Gear,34T
7	MA-07500063040	2		Bearing
10	MA-19631239000	1		Gear, 22-42T
11	MA-19631273000	1		Shaft, Main
12	MA-19631275000	1		Joint
13	MA-07500060050	1		Bearing
14	MA-07410004701	1	/P	Ring
15	MA-07400002500	1	/P	Ring
16	MA-10311363001	1		Ring
20	MA-19631256000	1		Bearing
21	MA-07700130205	1		Bearing
22	MA-11351302011	1		Holder
23	MA-11741273000	1		Nut (M25)
24	MA-11351322000	1		Ring, Snap
25	MA-11351317011	1		Shim
	MA-10191309000	1		Shim Set, Drive Pinion Includes 27-29
27	MA-11351315011	AR		Shim
28	MA-11351316011	AR		Shim
29	MA-11351317011	AR		Shim

www.mymowerparts.com

For Discount Cub Cadet Parts Call 606-678-9623 or 606-561-4983

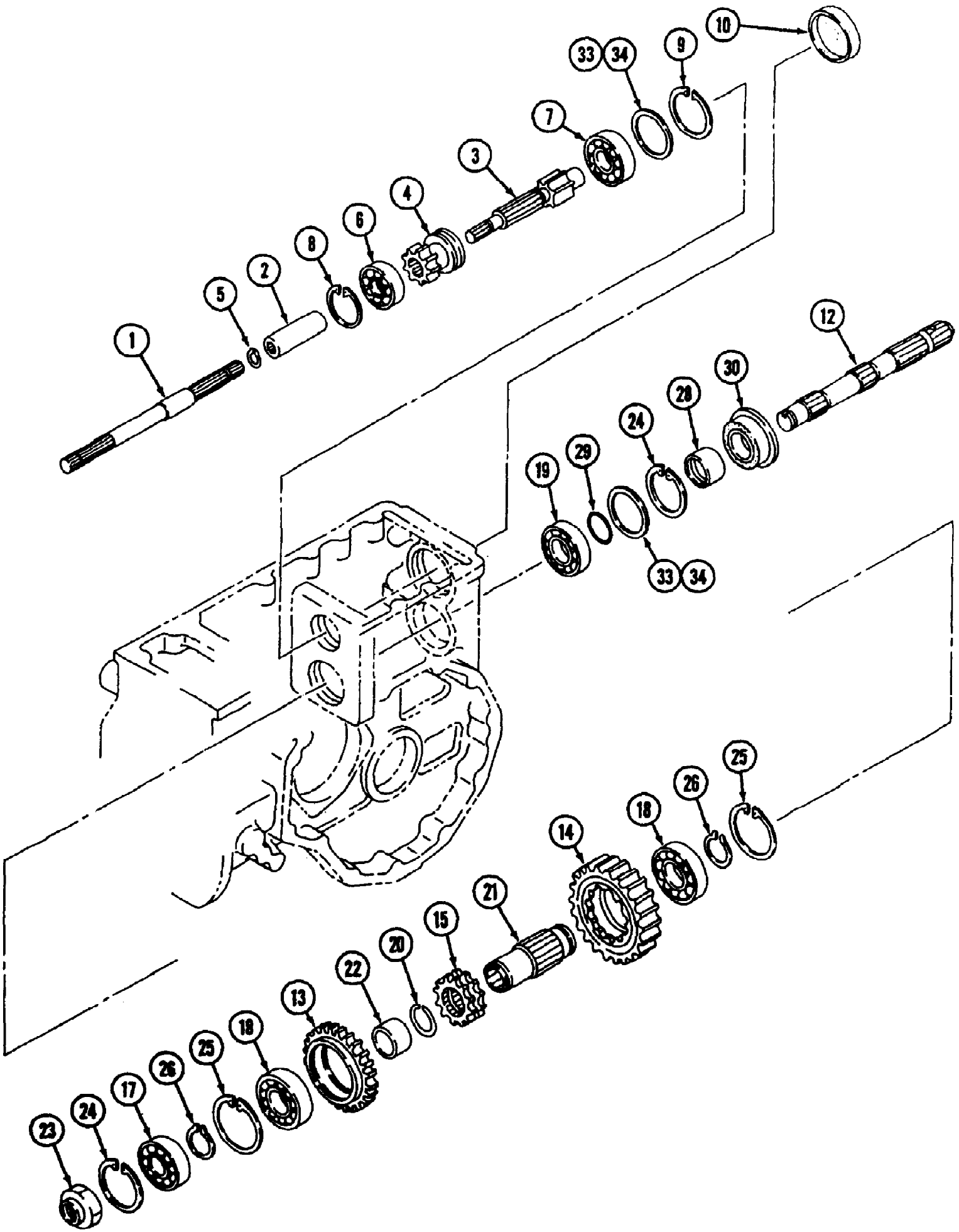

www.mymowerparts.com

For Discount Cub Cadet Parts Call 606-678-9623 or 606-561-4983

Ref #	Part Number	Qty	S/P/F	Description
1	MA-19631274000	1		Shaft
2	MA-19631242000	1		Joint
3	MA-19631243000	1		Shaft, PTO Drive
4	MA-19631244000	1		Gear, 17T
5	MA-07400001600	1	/P	Ring
6	MA-07500063040	1		Bearing
7	MA-07500063050	1		Bearing
8	MA-07410005201	1	/P	Ring
9	MA-07410006200	1		Ring
10	MA-08340062100	1		Seal Cap
12	MA-19631246000	1		Shaft, PTO
13	MA-19631247000	1		Gear, 41T
14	MA-19631248000	1		Gear, 48T
15	MA-19631249000	1		Gear Clutch
17	MA-07500063050	1		Bearing
18	MA-07500062070	2		Bearing
19	MA-07500062060	1		Bearing
20	MA-19631253000	1		Ring
21	MA-19631251000	1		Boss Spline
22	MA-19631252000	1		Collar
23	MA-11741273000	1		Nut (M25)
24	MA-07410006200	2		Ring
25	MA-07410007201	2		Ring
26	MA-07400003500	2	S	Ring
28	MA-10251405000	1		Bushing
29	MA-08300100300	1		O-Ring
30	MA-10211314000	1		Seal, Oil
	MA-10211318000	1		Liner Set Includes 33-35
33	MA-07300006201	AR		Liner
34	MA-07300006204	AR		Liner

www.mymowerparts.com

For Discount Cub Cadet Parts Call 606-678-9623 or 606-561-4983

FRONT WHEEL

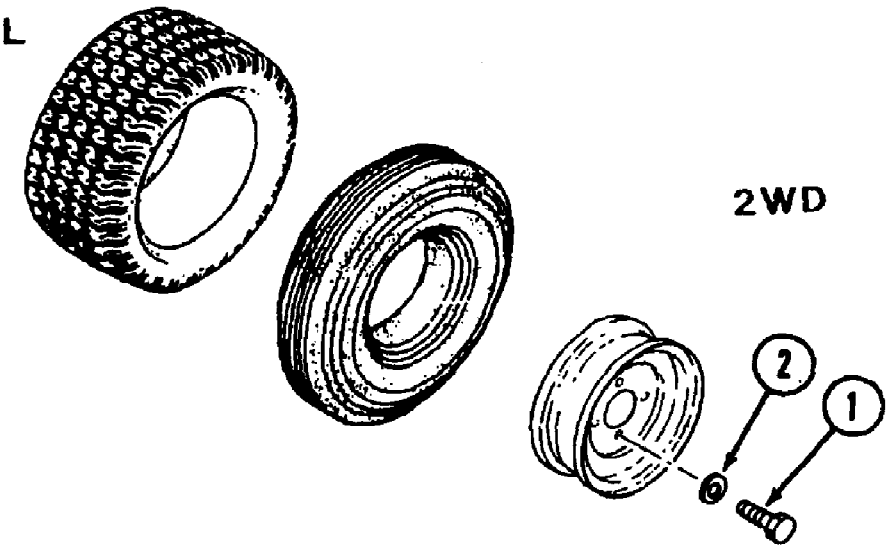

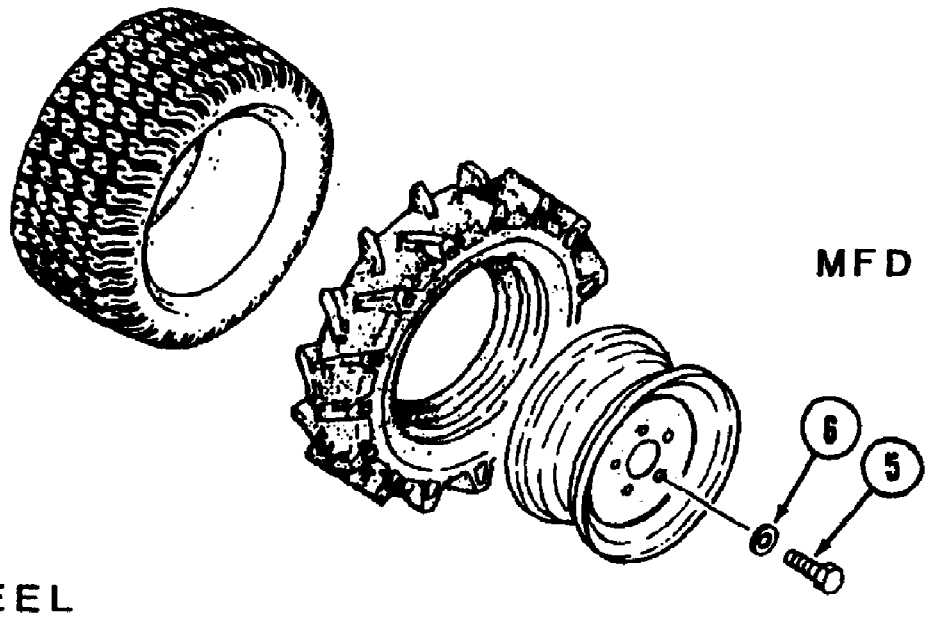

REAR WHEEL

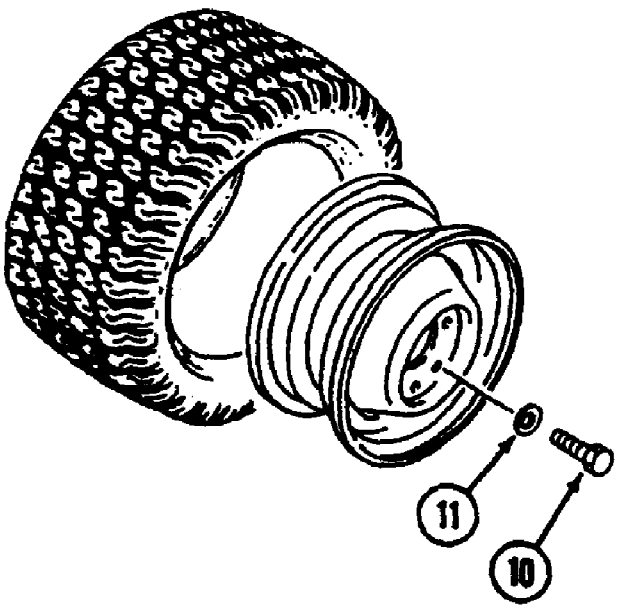

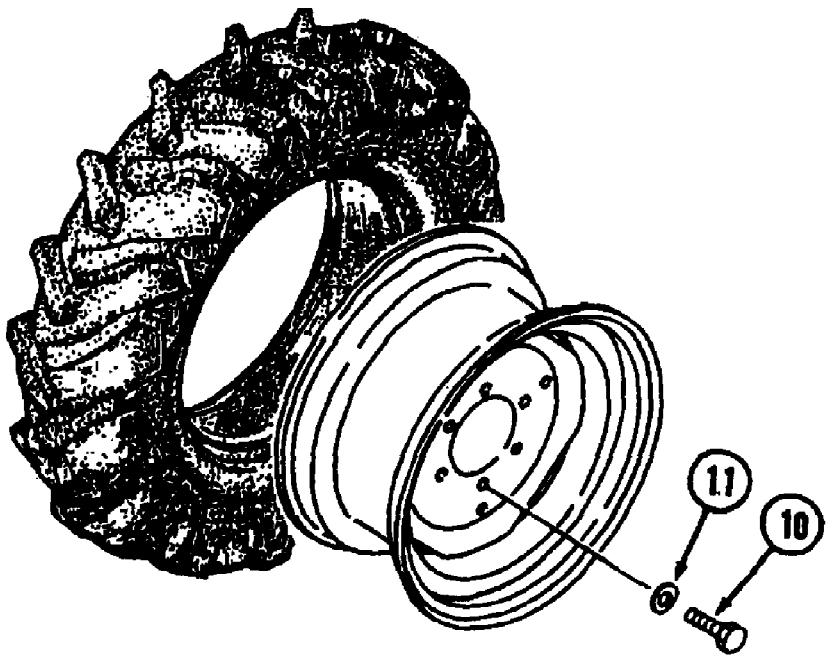

www.mymowerparts.com

For Discount Cub Cadet Parts Call 606-678-9623 or 606-561-4983

Wheel Mounting Hardware - 2WD

Ref #	Part Number	Qty	S/P/F	Description
1	MA-A0420314030	8	S	Bolt
2	MA-03550361428	8		Washer
5		1		Bolt Not used on this product
6		1		Washer Not used on this product
10	MA-A0420314030	12	S	Bolt
11	MA-03550361428	12		Washer

www.mymowerparts.com

For Discount Cub Cadet Parts Call 606-678-9623 or 606-561-4983

FRONT WHEEL

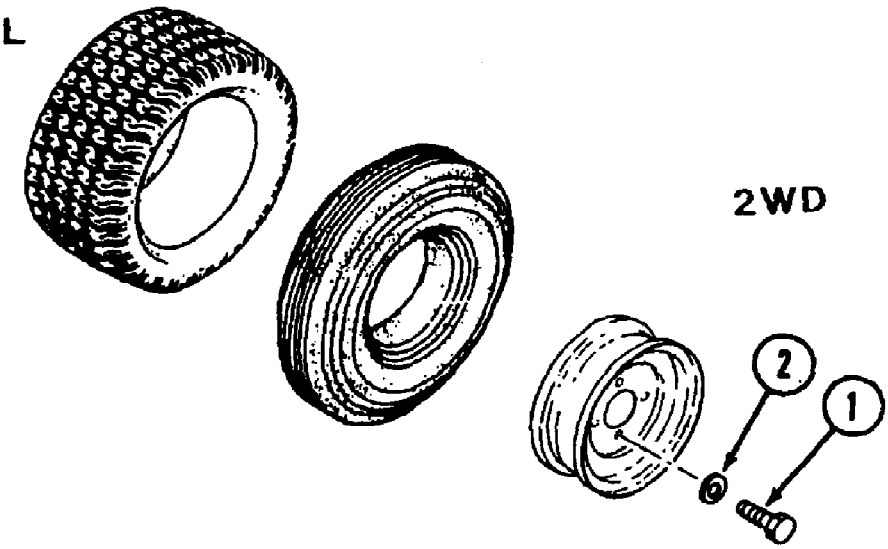

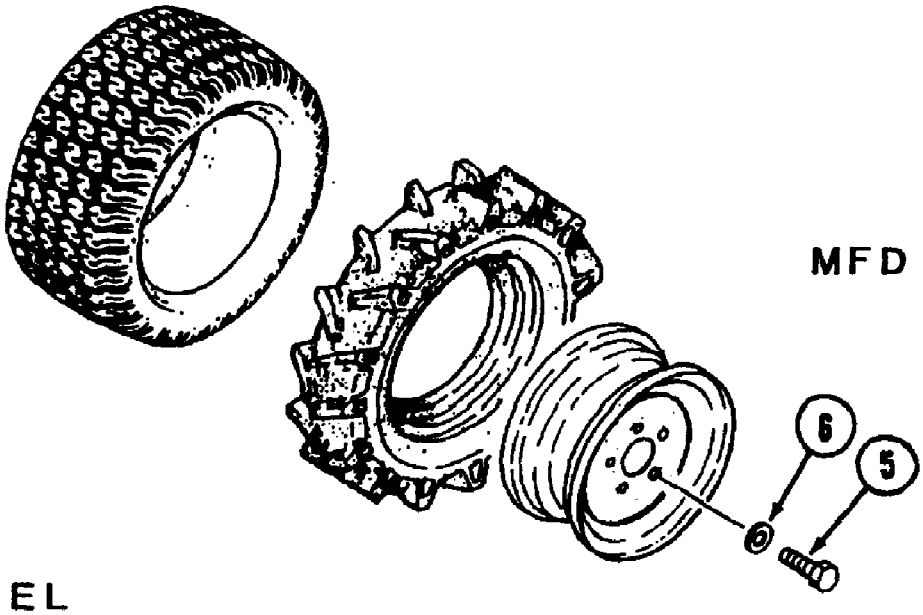

REAR WHEEL

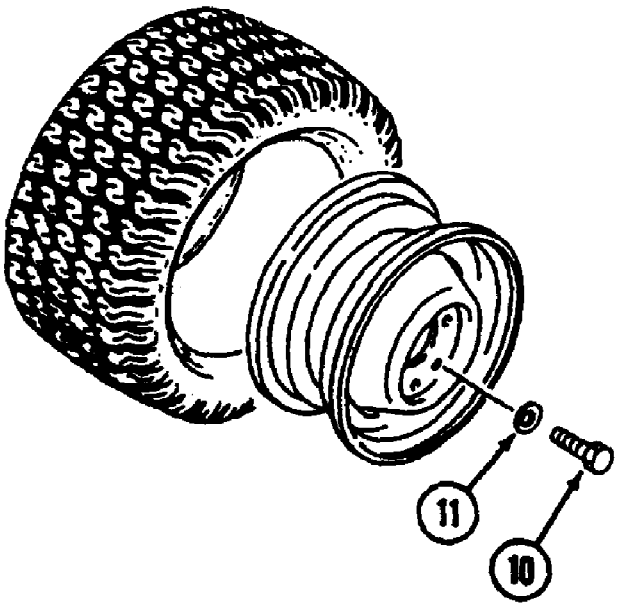

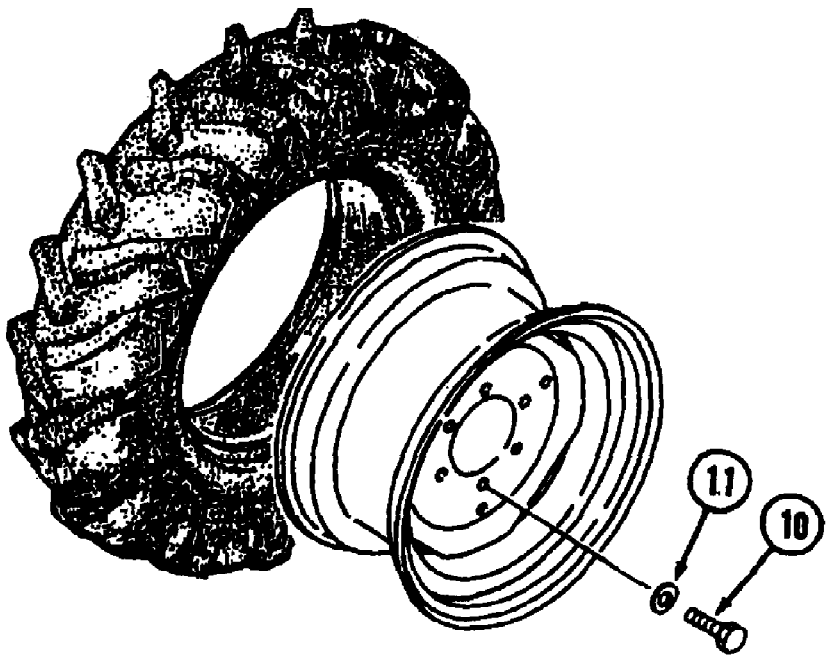

www.mymowerparts.com

For Discount Cub Cadet Parts Call 606-678-9623 or 606-561-4983

Ref #	Part Number	Qty	S/P/F	Description
1		1		Bolt Not used on this product
2		1		Washer Not used on this product
5	MA-A0520312025	10	S	Bolt
6	MA-03550361226	10		Washer
10	MA-A0420314030	12	S	Bolt
11	MA-03550361428	12		Washer

www.mymowerparts.com

For Discount Cub Cadet Parts Call 606-678-9623 or 606-561-4983

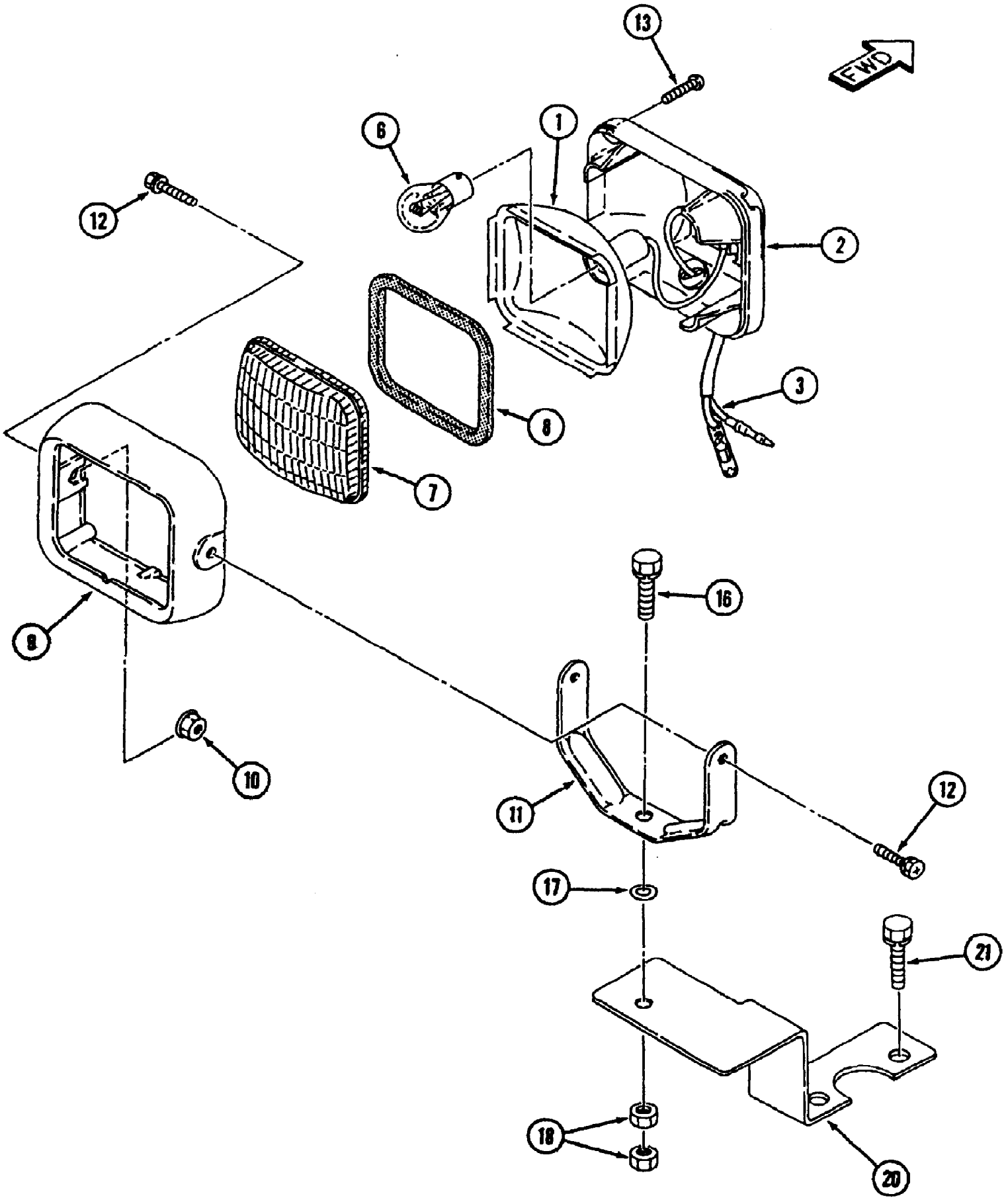

www.mymowerparts.com

For Discount Cub Cadet Parts Call 606-678-9623 or 606-561-4983

Ref #	Part Number	Qty	S/P/F	Description
		1		Work Lamp Ass'y Includes 1-18; Furnish Component Parts
	MA-12187742000	1	/P	Work Lamp Includes 1-13
	MA-12187743100	1	S	Body, Component Includes 1-3
1		1		Reflector, Component
2		1		Housing, Component
3		1		Lead, Component
6	MA-09808122304	1		Bulb
7	MA-12087711100	1		Lens
8	MA-12087711300	1		Gasket
9		1		Rim
10	MA-F3000106000	2		Nut
11	MA-12087711700	1		Stay
12	MA-F1040106016	2		Bolt
13	MA-04322104020	4		Screw, Tapping
16	MA-F1540108025	1		Bolt
17	MA-03500140818	1		Washer
18	MA-A3010108002	2		Nut
20	MA-12187745AG0	1		Bracket
21	MA-F1540108012	2		Bolt

www.mymowerparts.com