For Briggs & Stratton Discount Parts Call 606-678-9623 or 606-561-4983

FORM MS–5150–10/25/2004
REPLACES FORM MS–5150–4C–5/2002
FILE IN SECT. 2 OF SERVICE MANUAL

Illustrated Parts List

Model Series

28V700

TYPE NUMBERS
1113, 1116, 1117
1125, 1170, 1179.

TABLE OF CONTENTS

Air Cleaner 4
Alternator 6
Blower Housing/Shrouds 5
Cams 2
Carburetor 3
Controls 4
Crankcase Cover/Sump 2
Crankshaft 2
Cylinder 2
Electric Starter 6
Flywheel 5
Governor Spring 4
Head 2
Ignition 6
Kits/Gaskets–Carburetor 3
Kits/Gaskets–Valve 2
Oil 2
Piston Group 2
Valves 2

BRIGGS & STRATTON ®

PRINTED IN U.S.A.

COPYRIGHT by BRIGGS & STRATTON CORPORATION
All rights reserved. No part of this material may be reproduced or transmitted, in any form or by any means, electronic or mechanical, including photocopying, recording or by any information storage and retrieval system, without permission in writing from Briggs & Stratton Corporation.

www.mymowerparts.com

For Briggs & Stratton Discount Parts Call 606-678-9623 or 606-561-4983

28V700

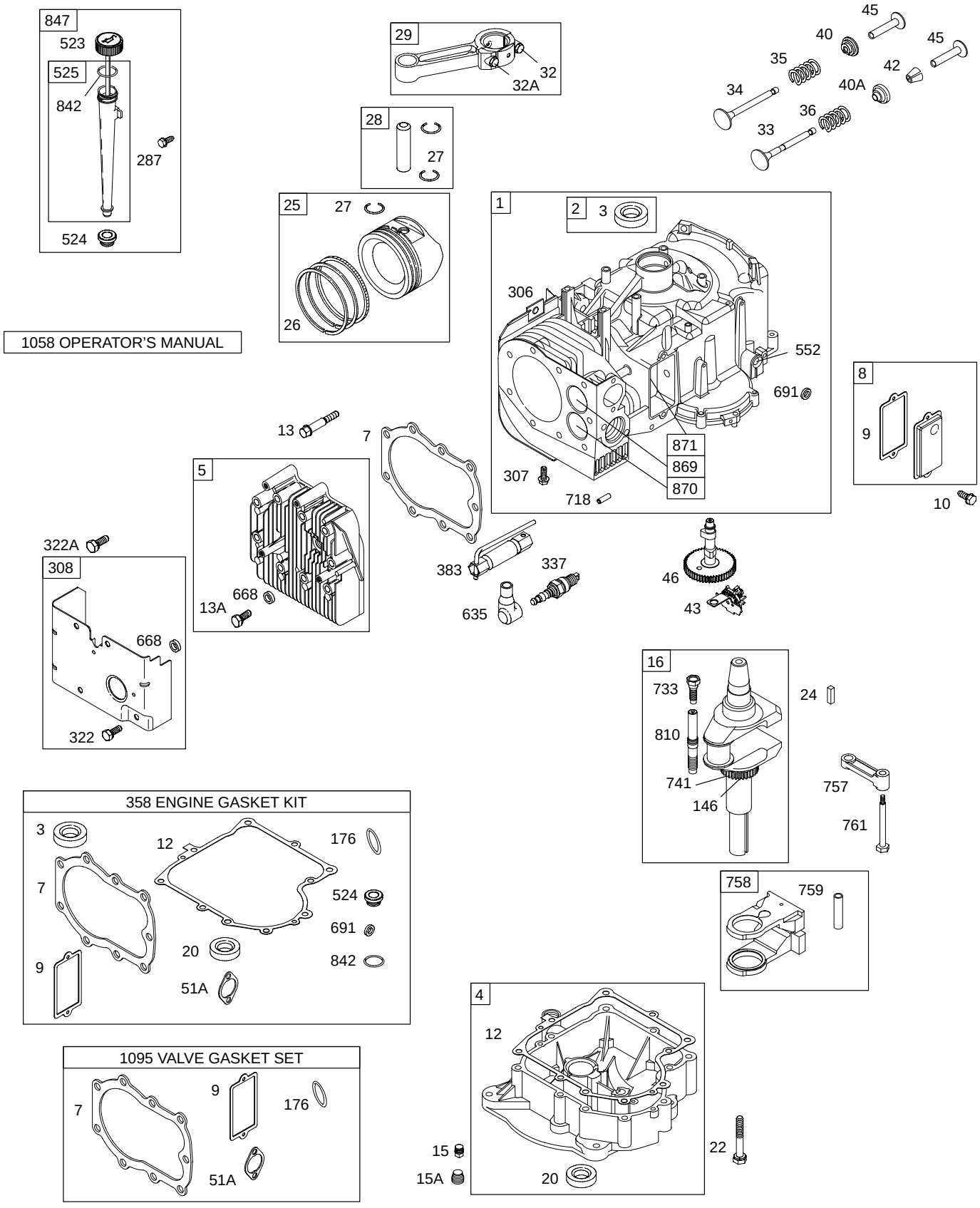

www.mymowerparts.com

For Briggs & Stratton Discount Parts Call 606-678-9623 or 606-561-4983

NIKKI

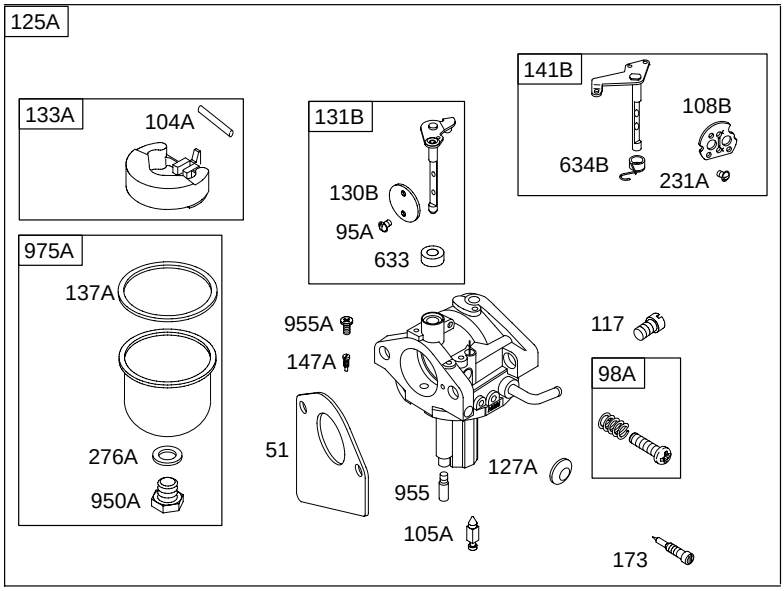

WALBRO

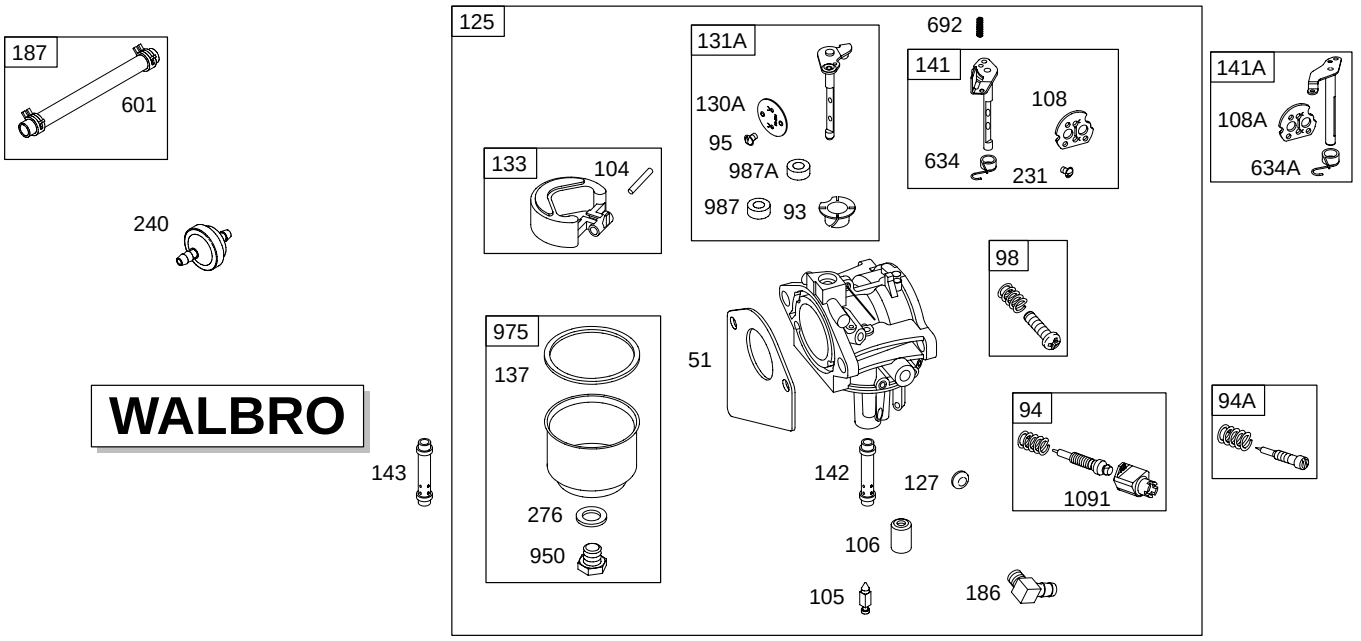

121 CARBURETOR OVERHAUL KIT

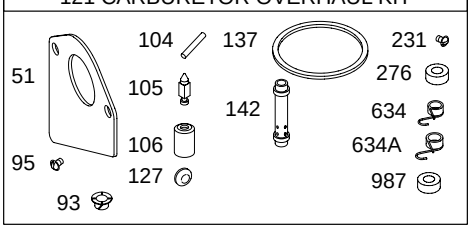

977 CARBURETOR GASKET SET

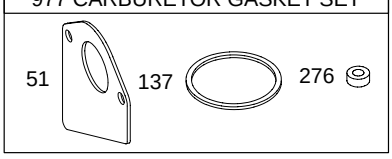

WALBRO

NIKKI

121A CARBURETOR OVERHAUL KIT

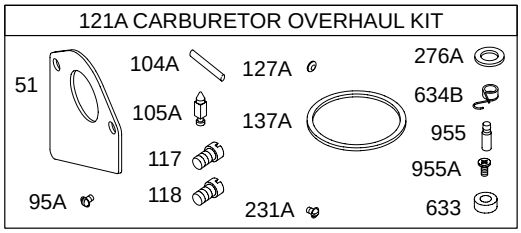

977A CARBURETOR GASKET SET

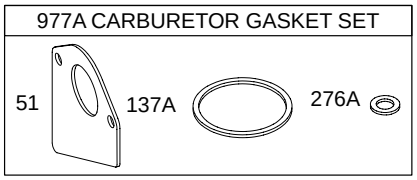

www.mymowerparts.com

28V700

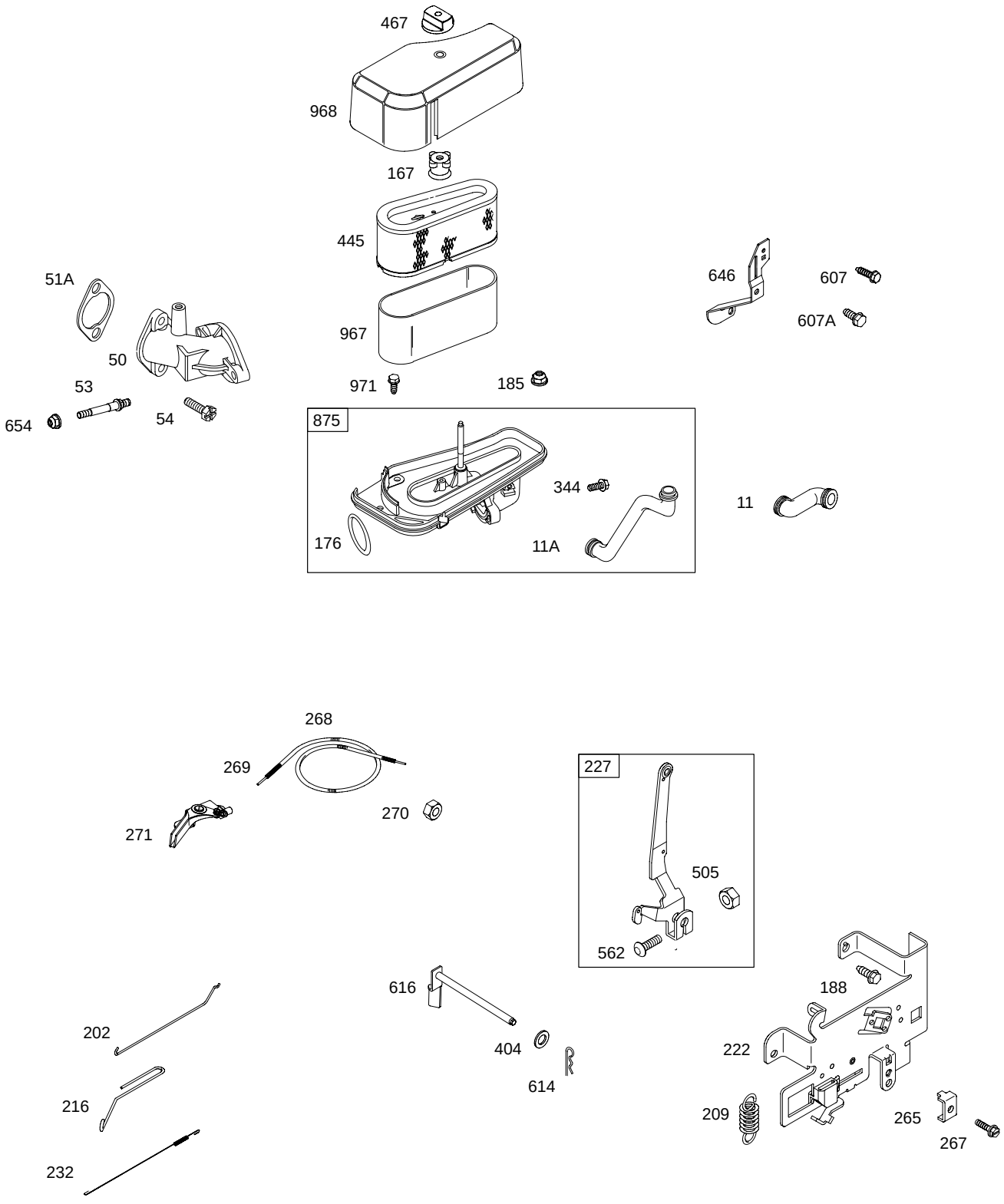
467
968
167
445
967
971
185
51A
50
53
654
54
646
607
607A
875
176
344
11A
11
268
269
271
270
227
505
562
616
404
614
188
222
209
265
267
202
216
232

For Briggs & Stratton Discount Parts Call 606-678-9623 or 606-561-4983

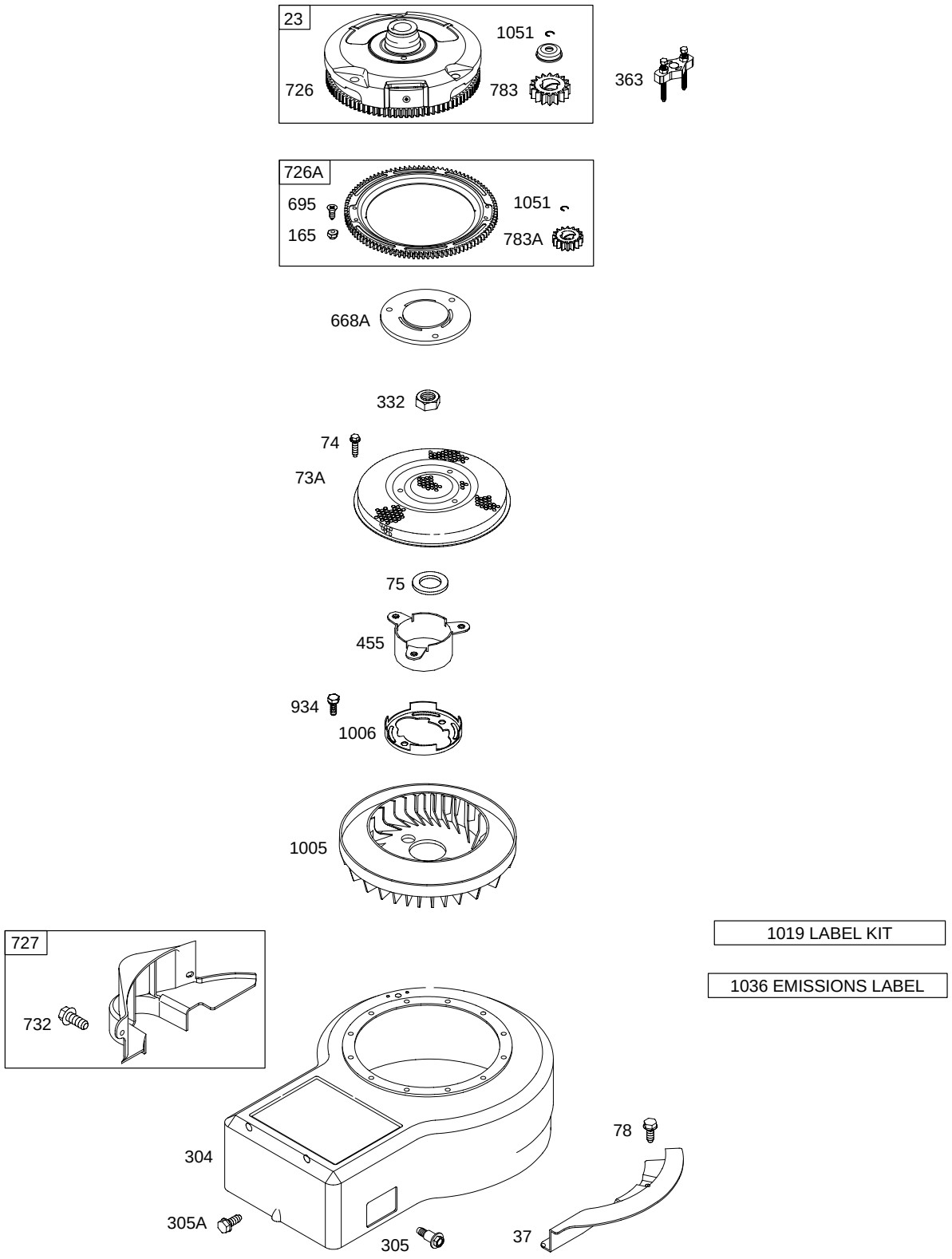

www.mymowerparts.com

For Briggs & Stratton Discount Parts Call 606-678-9623 or 606-561-4983

28V700

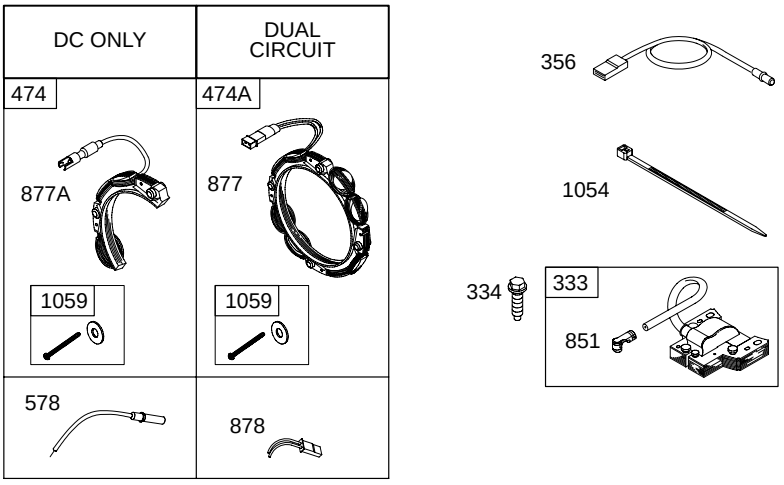

NOTE: *All Stators Use Reference* 1119 *Mounting Screw.*

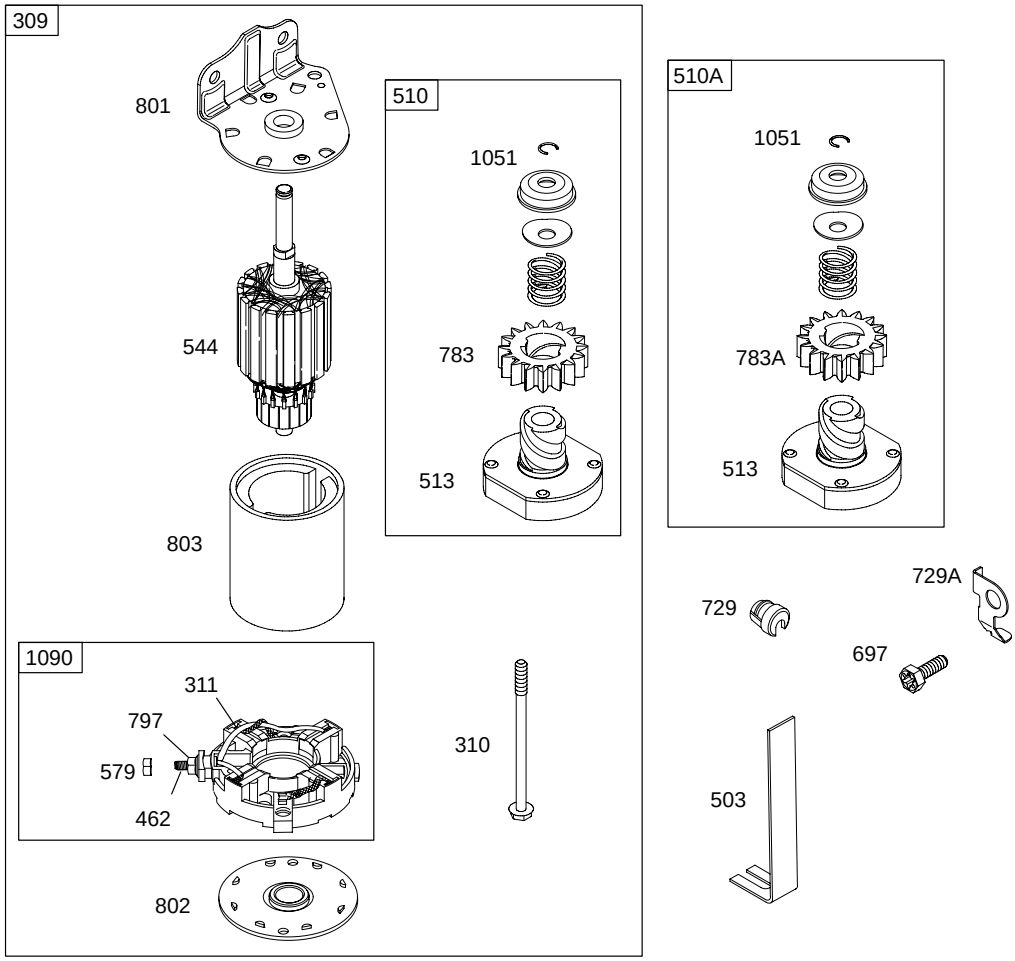

www.mymowerparts.com

For Briggs & Stratton Discount Parts Call 606-678-9623 or 606-561-4983

28V700

REF. NO.	PART NO.	DESCRIPTION
1	496413	Cylinder Assembly
2	399265	Kit–Bushing/Seal (Magneto Side)
3	★391086	Seal–Oil
4	494238	Sump–Engine
5	494240	Head–Cylinder
7	★∅271866	Gasket–Cylinder Head
8	495735	Breather Assembly
9	★∅27803	Gasket–Breather
10	691666	Screw (Breather Assembly)
11	692253	Tube–Breather
11A	691328	Tube–Breather
12	★692226	Gasket–Crankcase (.015” Thick) (Standard)
		–––––– Note –––––
		★**692406** Gasket–Crankcase (.005” Thick)
		★**692405** Gasket–Crankcase (.009” Thick)
13	690904	Screw (Cylinder Head)
13A	691687	Screw (Cylinder Head)
15	690946	Plug–Oil Drain
15A	691680	Plug–Oil Drain
16	693944	Crankshaft
20	★291675	Seal–Oil
22	692125	Screw (Engine Sump)
23	693557	Flywheel (Steel Ring Gear)
24	222698	Key–Flywheel
25	696397	Piston Assembly (Standard) (Used After Code Date 01060600).
		696399 Piston Assembly (.020” Oversize) (Used After Code Date 01060600).
		696400 Piston Assembly (.030” Oversize) (Used After Code Date 01060600).
		–––––– Note –––––
		499284 Piston Assembly (Standard) (Used Before Code Date 01060700).
		499292 Piston Assembly (.020” Oversize) (Used Before Code Date 01060700).
26	696403	Ring Set (Standard) (Used After Code Date 01060600).
		696404 Ring Set (.010” Oversize) (Used After Code Date 01060600).
		696405 Ring Set (.020” Oversize) (Used After Code Date 01060600).
		696406 Ring Set (.030” Oversize) (Used After Code Date 01060600).
		–––––– Note –––––
		499996 Ring Set (Standard) (Used Before Code Date 01060700).
		392331 Ring Set (Standard Chrome) (Used Before Code Date 01060700).
		498998 Ring Set (.020” Oversize) (Used Before Code Date 01060700).
27	691299	Lock–Piston Pin
28	498319	Pin–Piston (Standard)
		–––––– Note –––––
		498320 Pin–Piston (.005” Oversize)
29	494504	Rod–Connecting (Standard)
		–––––– Note –––––
		495490 Rod–Connecting (.020” Undersize)
32	690356	Screw (Connecting Rod) (1 7/8” Long)
32A	690348	Screw (Connecting Rod) (1 5/8” Long)
33	262246	Valve–Exhaust
34	262247	Valve–Intake
35	691605	Spring–Valve (Intake)
36	691597	Spring–Valve (Exhaust)
37	690456	Guard–Flywheel
40	690650	Retainer–Valve (Intake)
40A	691939	Retainer–Valve (Exhaust)
42	494553	Keeper–Valve
43	691968	Slinger–Governor/Oil
45	691811	Tappet–Valve
46	697668	Camshaft
50	691711	Manifold–Intake
51	●◆692284	Gasket–Intake
51A	★∅272554	Gasket–Intake
53	690227	Stud (Carburetor)
54	690953	Screw (Intake Manifold)
73	691748	Screen–Rotating
74	691655	Screw (Rotating Screen)
75	690582	Washer (Flywheel)
78	690661	Screw (Flywheel Guard)
93	690602	Bushing–Throttle Shaft
94	498030	Kit–Idle Mixture
94A	494383	Kit–Idle Mixture
95	●691636	Screw (Throttle Valve)
95A	●690718	Screw (Throttle Valve)
98	495800	Kit–Idle Speed
98A	694907	Kit–Idle Speed
104	●690525	Pin–Float Hinge
104A	●694918	Pin–Float Hinge
105	●231855	Valve–Float Needle
105A	●694922	Valve–Float Needle
106	●690577	Seat–Inlet (Gravity Feed)
		–––––– Note –––––
		●**691780** Seat–Inlet (Pump Feed)

★ Engine Gasket Set–Reference 358
● Carburetor Overhaul Kit–Reference 121
◆ Carburetor Gasket Set–Reference 977
∅ Valve Gasket Set–Reference 1095

5150–7 Assemblies include all parts shown in frames. **10/25/2004**

www.mymowerparts.com

For Briggs & Stratton Discount Parts Call 606-678-9623 or 606-561-4983

28V700

REF. NO.	PART NO.	DESCRIPTION
108	**690464**	Valve–Choke (Manual Choke)
108A	**692344**	Valve–Choke (Choke A Matic)
108B	**694923**	Valve–Choke
117	●**690880**	Jet–Main (Standard)
118	●**694925**	Jet–Main (High Altitude)
121	**697884**	Kit–Carburetor Overhaul (696160, 696162, 696164, 696166, 697212, 697213, 697214, 697906)
		–––––– Note –––––
		499220 Kit–Carburetor Overhaul (LMT 58, 59, 60, 61, 62, 92, 93, 94, 95, 96, 108, 111, 162, 165, 169)
121A	**694930**	Kit–Carburetor Overhaul (Nikki)
125	**698171**	Carburetor (696160, 696162, 696164, 696166, 697212, 697213, 697214, 697906)
		–––––– Note –––––
		498027 Carburetor (Gravity) (LMT 1, 2, 3, 4, 5, 6, 7, 32, 37, 38, 39, 40, 41, 63, 64, 65, 66, 77, 78, 79, 80, 81, 92, 93, 94, 95, 96, 97, 108, 111, 133, 134, 135, 136, 162,163, 164, 165)
125A	**694941**	Carburetor (Nikki)
127	●**695005**	Plug–Welch (LMT 1, 2, 3, 4, 5, 6, 7, 32, 37, 38, 39, 40, 41, 63, 64, 65, 66, 77, 78, 79, 80, 81, 92, 93, 94, 95, 96, 97, 108, 111, 133, 134, 135, 136, 162,163, 164, 165)
		–––––– Note –––––
		●**694524** Plug–Welch (696160, 696162, 696164, 696166, 697212, 697213, 697214, 697906)
127A	●**694916**	Plug–Welch
130A	**691750**	Valve–Throttle
130B	**694917**	Valve–Throttle
131A	**494379**	Kit–Throttle Shaft
131B	**694909**	Kit–Throttle Shaft
133	**494381**	Float–Carburetor
133A	**694914**	Float–Carburetor
137	●⬥**281165**	Gasket–Float Bowl
137A	●⬥**694920**	Gasket–Float Bowl
141	**495097**	Kit–Choke Shaft (Manual Choke)
141A	**495931**	Kit–Choke Shaft (Choke A Matic)
141B	**694913**	Kit–Choke Shaft
142	●**691434**	Nozzle–Carburetor (Standard)
143	**497737**	Nozzle–Carburetor (High Altitude)
146	**691639**	Key–Timing
147A	●**694927**	Jet–Pilot
165	**693148**	Nut (Ring Gear)
167	**692297**	Seal–Air Cleaner Nut
173	**694926**	Valve–Idle Mixture
176	★∅**691917**	Seal–O Ring (Air Cleaner Base)
185	**690958**	Nut (Air Cleaner Base)
186	**692317**	Connector–Hose
187	**691050**	Line–Fuel (Cut To Required Length)
188	**691963**	Screw (Control Bracket)
202	**691841**	Link–Mechanical Governor
209	**691798**	Spring–Governor (Brown)
		–––––– Note –––––
		690480 Spring–Governor (Red) Used on Type No(s). 1116, 1170.
		690576 Spring–Governor (Gold) Used on Type No(s). 1117, 1179.
216	**691840**	Link–Choke
222	**694042**	Bracket–Control
227	**691374**	Lever–Governor Control
231	●**691636**	Screw (Choke Valve)
231A	●**690718**	Screw (Choke Valve)
232	**691842**	Spring–Governor Link
240	**298090**	Filter–Fuel
265	**691024**	Clamp–Casing
267	**690804**	Screw (Casing Clamp)
268	**691025**	Casing–Control Wire (Cut To Required Length)
269	**691026**	Wire–Control (Cut To Required Length)
270	**691027**	Nut (Control Wire Casing)
271	**691028**	Lever–Control
276	●⬥**692255**	Washer–Sealing
276A	●⬥**690997**	Washer–Sealing
287	**691002**	Screw (Dipstick Tube)
304	**691400**	Housing–Blower
305	**692198**	Screw (Blower Housing)
305A	**692127**	Screw (Blower Housing)
306	**698477**	Shield–Cylinder
307	**691003**	Screw (Cylinder Shield)
308	**491490**	Cover–Cylinder Head
309	**693551**	Motor–Starter (3 5/8” Housing Length) (Steel Ring Gear Only)
		–––––– Note –––––
		497595 Motor–Starter (3 5/8” Housing Length) (Plastic Ring Gear Only)
		693054 Motor–Starter (3 5/8” Housing Length) (Aluminum Ring Gear Only)

★ Engine Gasket Set–Reference 358
● Carburetor Overhaul Kit–Reference 121
⬥ Carburetor Gasket Set–Reference 977
∅ Valve Gasket Set–Reference 1095

www.mymowerparts.com

For Briggs & Stratton Discount Parts Call 606-678-9623 or 606-561-4983

REF. NO.	PART NO.	DESCRIPTION
310	690323	Screw
311	497608	Brush Set
322	691687	Screw (Cylinder Head Cover)
322A	692198	Screw (Cylinder Head Cover)
332	692582	Nut (Flywheel)
333	492341	Armature–Magneto
334	691061	Screw (Magneto Armature)
337	802592	Plug–Spark
344	693675	Screw (Cable Clamp)
356	690799	Wire–Stop
358	494241	Gasket Set–Engine
363	19203	Puller–Flywheel
383	89838	Wrench–Spark Plug
404	691691	Washer (Governor Crank)
445	496894	Filter–Air Cleaner Cartridge
455	691173	Cup–Flywheel
462	691261	Washer (Starter Cable)
467	691668	Knob–Air Cleaner
474	696578	Alternator (DC Only)
474A	696459	Alternator (Dual Circuit)
503	691532	Strap–Starter
505	691251	Nut (Governor Control Lever)
510	693699	Drive–Starter (Used with Steel Ring Gear)
510A	696541	Drive–Starter (Used with Aluminum And Plastic Ring Gears)
513	692024	Clutch–Drive
523	692014	Dipstick
524	★281370	Seal–Dipstick Tube
525	691398	Tube–Dipstick
544	692034	Armature–Starter
552	491986	Bushing–Governor Crank
562	691119	Bolt (Governor Control Lever)
578	692306	Wire Assembly
579	691029	Nut (Starter Cable)
601	95162	Clamp–Hose
607	690703	Screw (Air Cleaner Brace)
607A	691693	Screw (Air Cleaner Brace)
614	691620	Pin–Cotter
616	692012	Crank–Governor
633	●690998	Seal–Choke/Throttle Shaft
634	●690801	Spring/Seal Assembly (Manual Choke)
634A	●690802	Spring/Seal Assembly (Choke A Matic)
634B	●694912	Spring/Seal Assembly
635	66538	Boot–Spark Plug
646	690460	Brace–Air Cleaner
654	690958	Nut (Air Cleaner Base)
668	690510	Spacer (Cylinder Head)
668A	691323	Spacer (Rotating Screen)
691	★692407	Seal–Governor Shaft
692	690572	Spring–Detent
695	693109	Screw (Ring Gear)
697	690372	Screw (Drive Cap)
718	690959	Pin–Locating
726		Gear–Ring (Steel) (Sold In Flywheel Kit, Reference 23, Only)
726A	696537	Gear–Ring (Aluminum) (Services Plastic Ring Gear Only)
727	490324	Cover–Starter Drive
729	690596	Clip–Wire
729A	691224	Clip–Wire
732	691002	Screw (Starter Drive Cover)
733	691658	Screw (Crankshaft Extension)
741	691284	Gear–Timing
757	691714	Link–Counterweight
758	692423	Counterweight
759	691239	Pin–Counterweight
761	691096	Screw (Counterweight)
783	693713	Gear–Pinion (Steel Ring Gear Only)
783A	695708	Gear–Pinion (For Aluminum and Plastic Ring Gears Only)
797	693167	Nut (Brush Retainer)
801	691283	Cap–Drive
802	691286	Cap–End
803	693757	Housing–Starter
810	691779	Extension–Crankshaft
842	★691870	Seal–O Ring (Dipstick Tube)
847	496415	Dipstick/Tube Assembly
851	493880	Terminal–Spark Plug
869	691802	Seat–Valve (Intake)
870	691844	Seat–Valve (Exhaust)
871	261961	Bushing–Valve Guide (Exhaust)
		–––––– Note –––––
		231218 Bushing–Valve Guide (Intake) (Brass)
875	696129	Base–Air Cleaner
877	393456	Wire/Connector–Alternator
877A	393814	Wire/Connector–Alternator
878	691237	Harness–Alternator
934	691058	Screw (Fan Retainer)
950	691657	Screw–Float Bowl
950A	694919	Screw–Float Bowl
955	●694924	Plug–Carburetor (Idle Chamber)
955A	694921	Plug–Carburetor (Pilot Jet)
967	272403	Filter–Pre Cleaner
968	691916	Cover–Air Cleaner
971	691108	Screw (Air Cleaner Base to Carburetor)

★ Engine Gasket Set–Reference 358
● Carburetor Overhaul Kit–Reference 121
◆ Carburetor Gasket Set–Reference 977
∅ Valve Gasket Set–Reference 1095

Assemblies include all parts shown in frames.

www.mymowerparts.com

For Briggs & Stratton Discount Parts Call 606-678-9623 or 606-561-4983

28V700

REF. NO.	PART NO.	DESCRIPTION
975	**495933**	Bowl–Float
975A	**694908**	Bowl–Float
977	**690192**	Gasket Set–Carburetor
977A	**694931**	Gasket Set–Carburetor
987	●**691326**	Seal–Throttle Shaft
987A	**692001**	Seal–Throttle Shaft
1005	**691905**	Fan–Flywheel
1006	**690452**	Retainer–Fan
1019	**491193**	Kit–Label
1036	**696770**	Label–Emissions (Used After Code Date 01093000).
		–––––– Note –––––
		695699 Label–Emissions (Used After Code Date 00070200 and Before Code Date 01100100).
		695036 Label–Emissions (Used After Code Date 99093000 and Before Code Date 00070300).
		694325 Label–Emissions (Used After Code Date 99010300 and Before Code Date 99100100).
		499362 Label–Emissions (Used After Code Date 97063000 and Before Code Date 99010400).
		499361 Label–Emissions (Used Before Code Date 97070100).
1051	**691265**	Ring–Retaining
1054	**280275**	Tie–Cable
1058	**274787**	Operator's Manual
1059	**698516**	Kit–Screw/Washer (Alternator)
1090	**691293**	Retainer–Brush
1091	**691333**	Cap–Limiter
1095	**498539**	Gasket Set–Valve
1119	**691183**	Screw (Alternator)

★ Engine Gasket Set–Reference 358
● Carburetor Overhaul Kit–Reference 121
◆ Carburetor Gasket Set–Reference 977
∅ Valve Gasket Set–Reference 1095

www.mymowerparts.com