For Briggs & Stratton Discount Parts Call 606-678-9623 or 606-561-4983

FORM MS–5720–11/08/2005
REPLACES FORM MS–5720–08/17/2005
FILE IN SECT. 2 OF SERVICE MANUAL
127300

Illustrated Parts List

Model Series

127300

TYPE NUMBERS
0036 through 0176.

TABLE OF CONTENTS

Air Cleaner 6
Blower Housing 7
Camshaft 2
Carburetor 4
Controls 5
Crankcase Cover 2
Crankshaft 2
Cylinder 2
Cylinder Head 3
Electric Starter 5
Exhaust System 6
Flywheel 7
Fuel Supply 5
Gear Reduction 6
Governor Spring 5
Ignition 5
Kits/Gaskets – Carburetor 4
Kits/Gaskets – Engine 2
Kits/Gaskets – Valve 3
Lubrication 5
Piston Group 2
Rewind Starter 7

PRINTED IN U.S.A.

BRIGGS & STRATTON ®

COPYRIGHT by BRIGGS & STRATTON CORPORATION
All rights reserved. No part of this material may be reproduced or transmitted, in any form or by any means, electronic or mechanical, including photocopying, recording or by any information storage and retrieval system, without permission in writing from Briggs & Stratton Corporation.

www.mymowerparts.com

127300

1019 LABEL KIT

1058 OWNER"S MANUAL

1330 REPAIR MANUAL

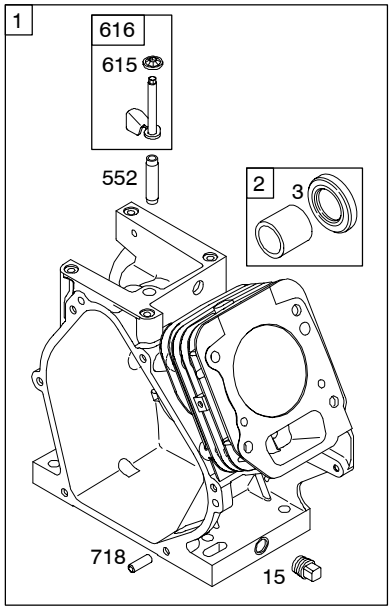

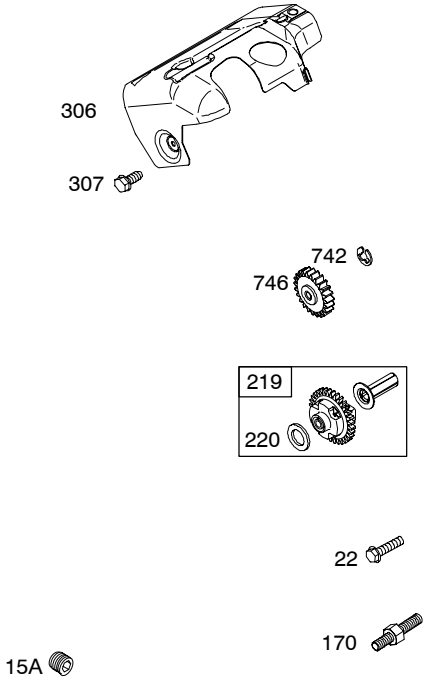

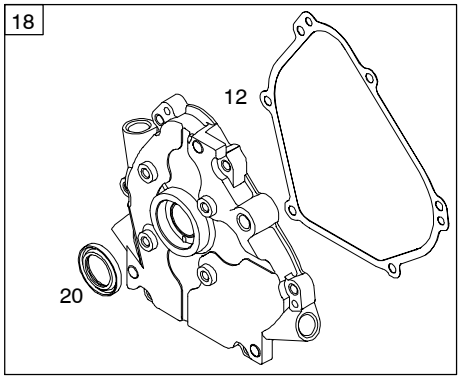

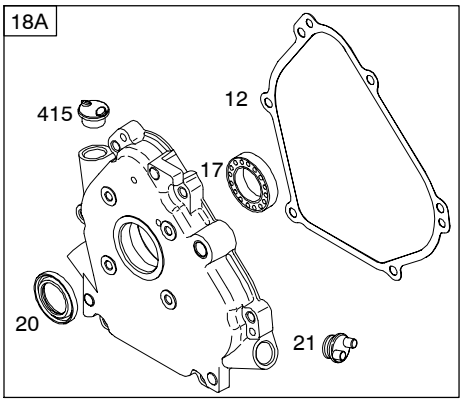

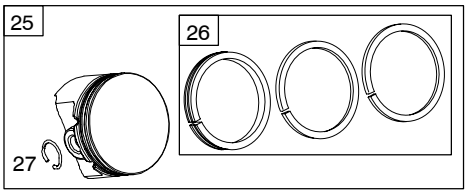

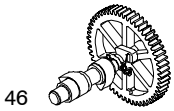

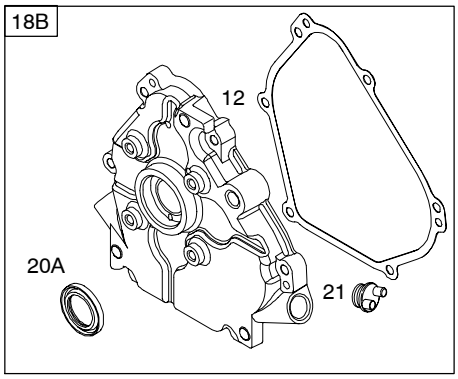

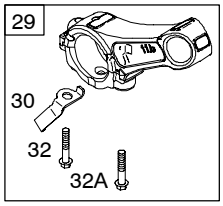

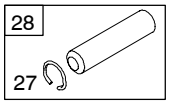

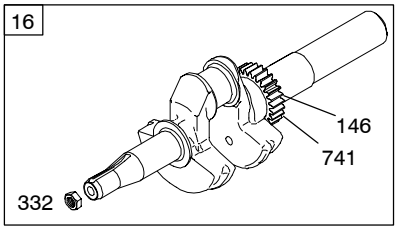

358 ENGINE GASKET SET

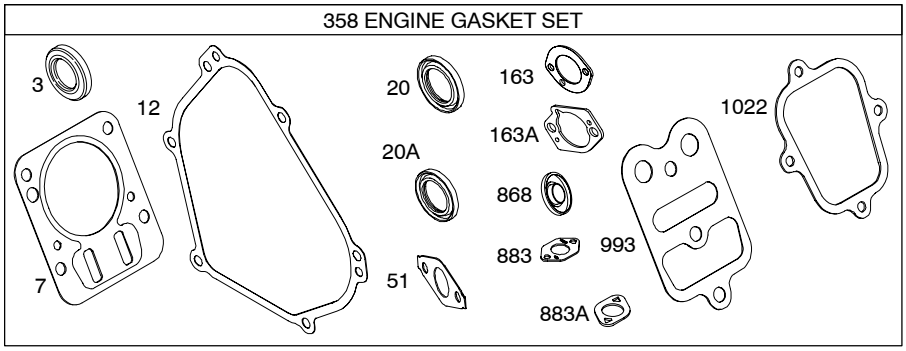

Illustrations cover a range of engines. Parts shown without corresponding text may not be used on your specific engine.

5720–2 Assemblies include all parts shown in frames. **11/08/2005**

www.mymowerparts.com

127300

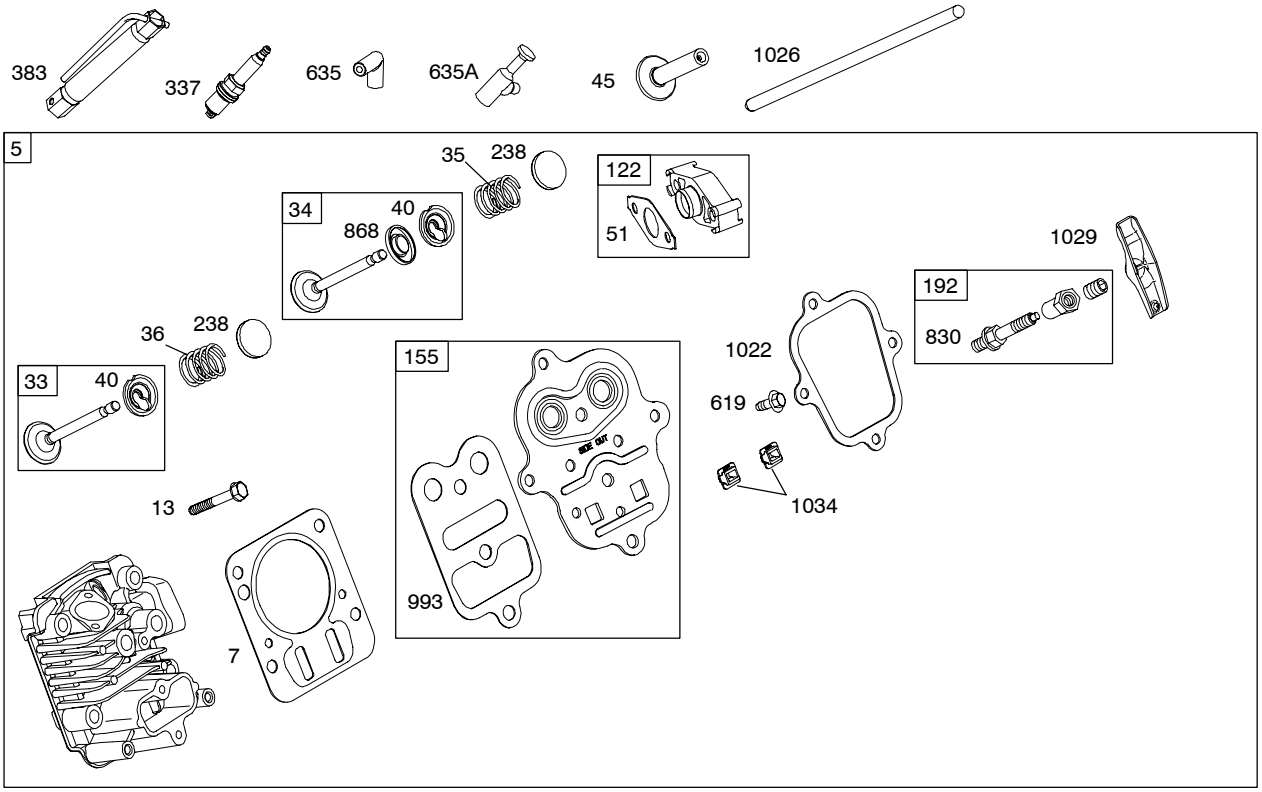

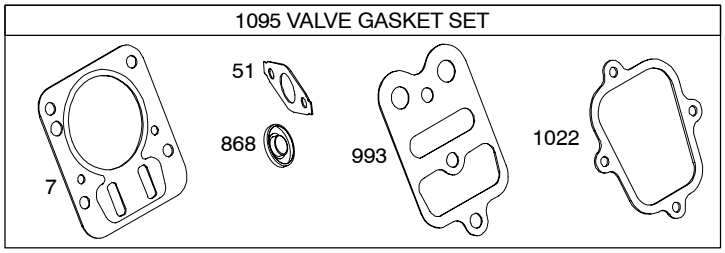

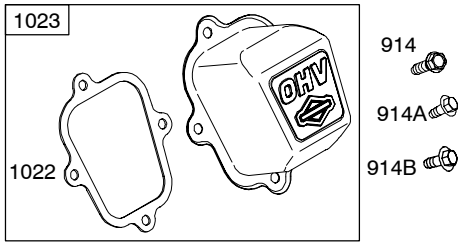

Illustrations cover a range of engines. Parts shown without corresponding text may not be used on your specific engine.

www.mymowerparts.com

127300

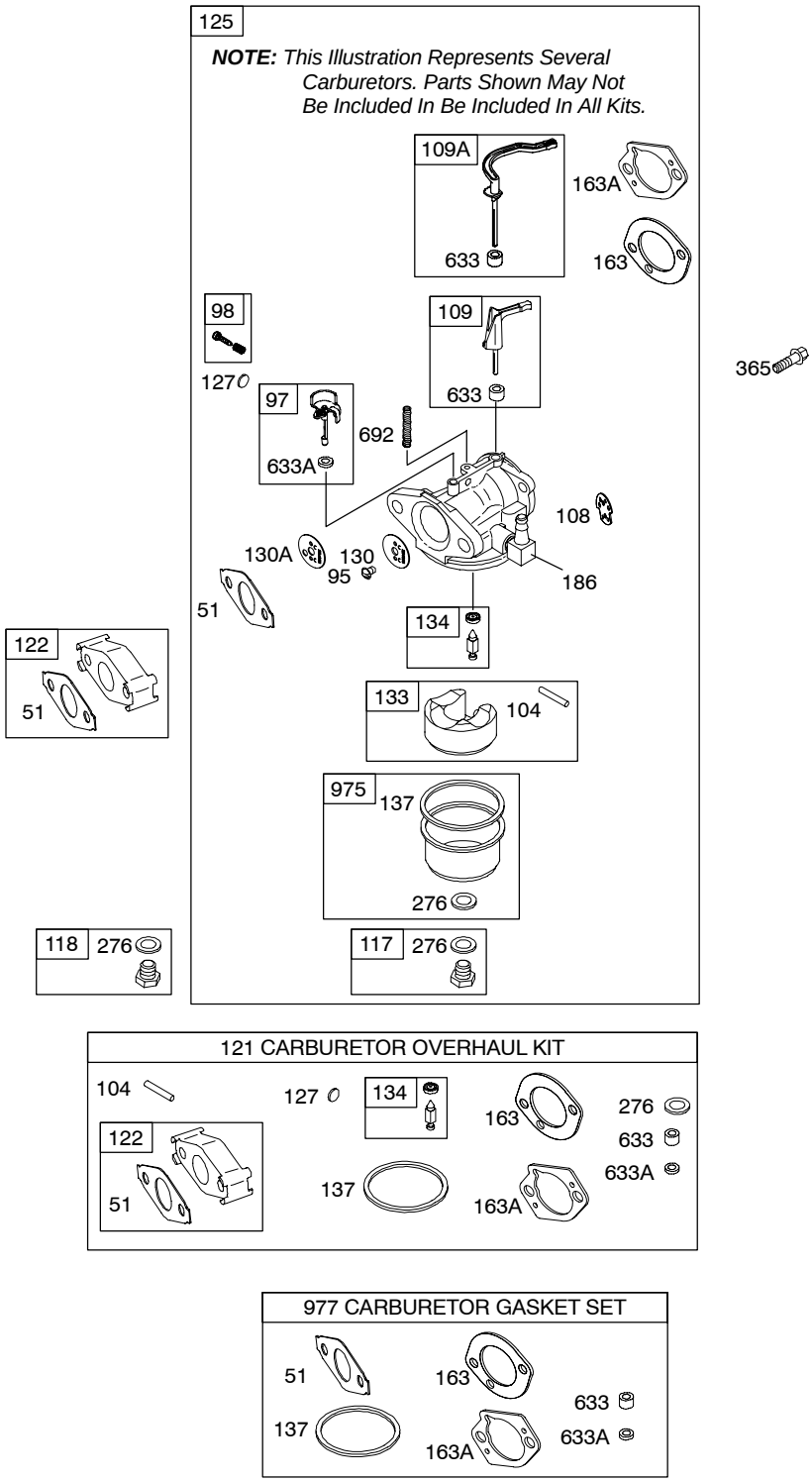

Illustrations cover a range of engines. Parts shown without corresponding text may not be used on your specific engine.

www.mymowerparts.com

127300

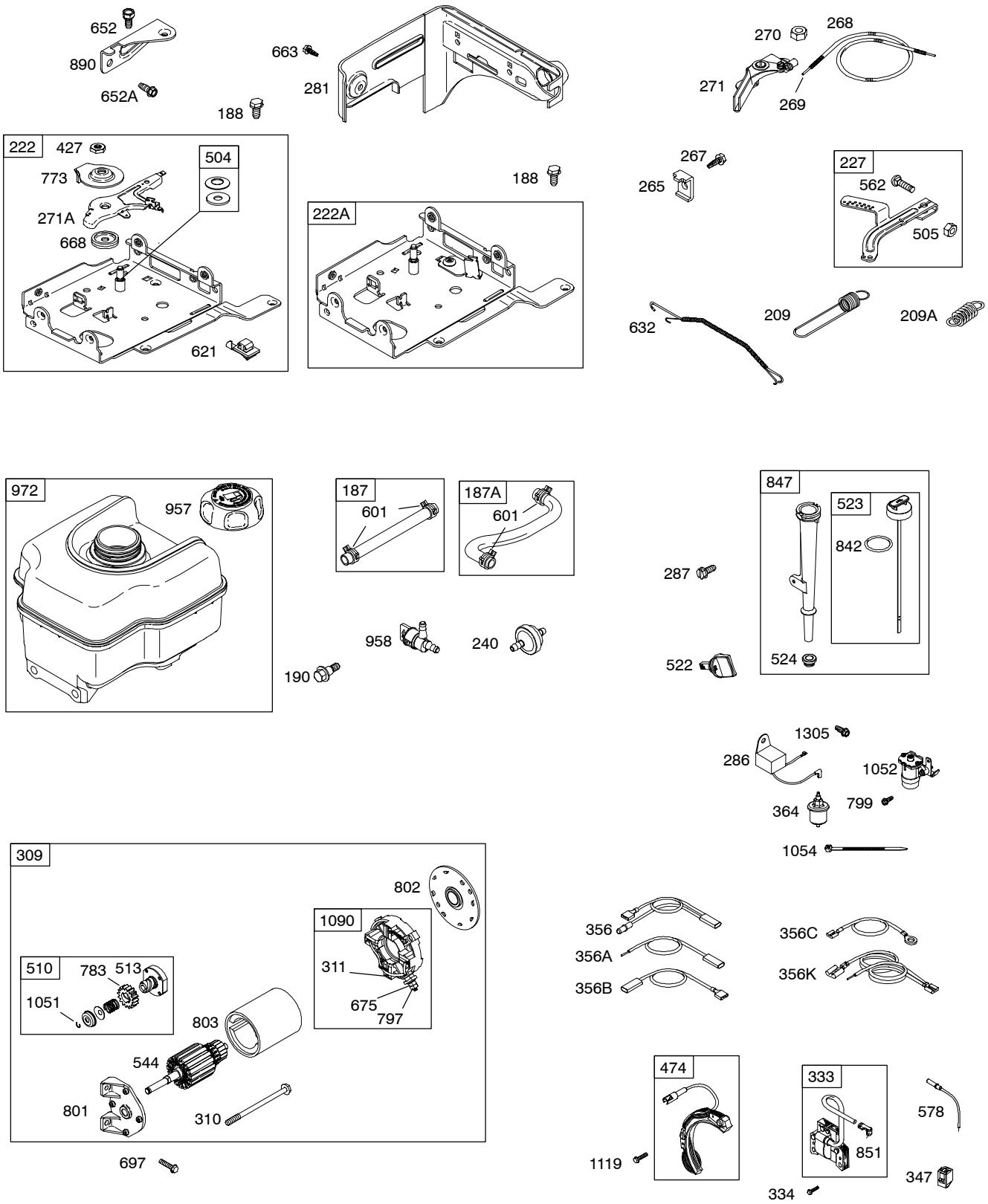

Illustrations cover a range of engines. Parts shown without corresponding text may not be used on your specific engine.

Assemblies include all parts shown in frames.

www.mymowerparts.com

127300

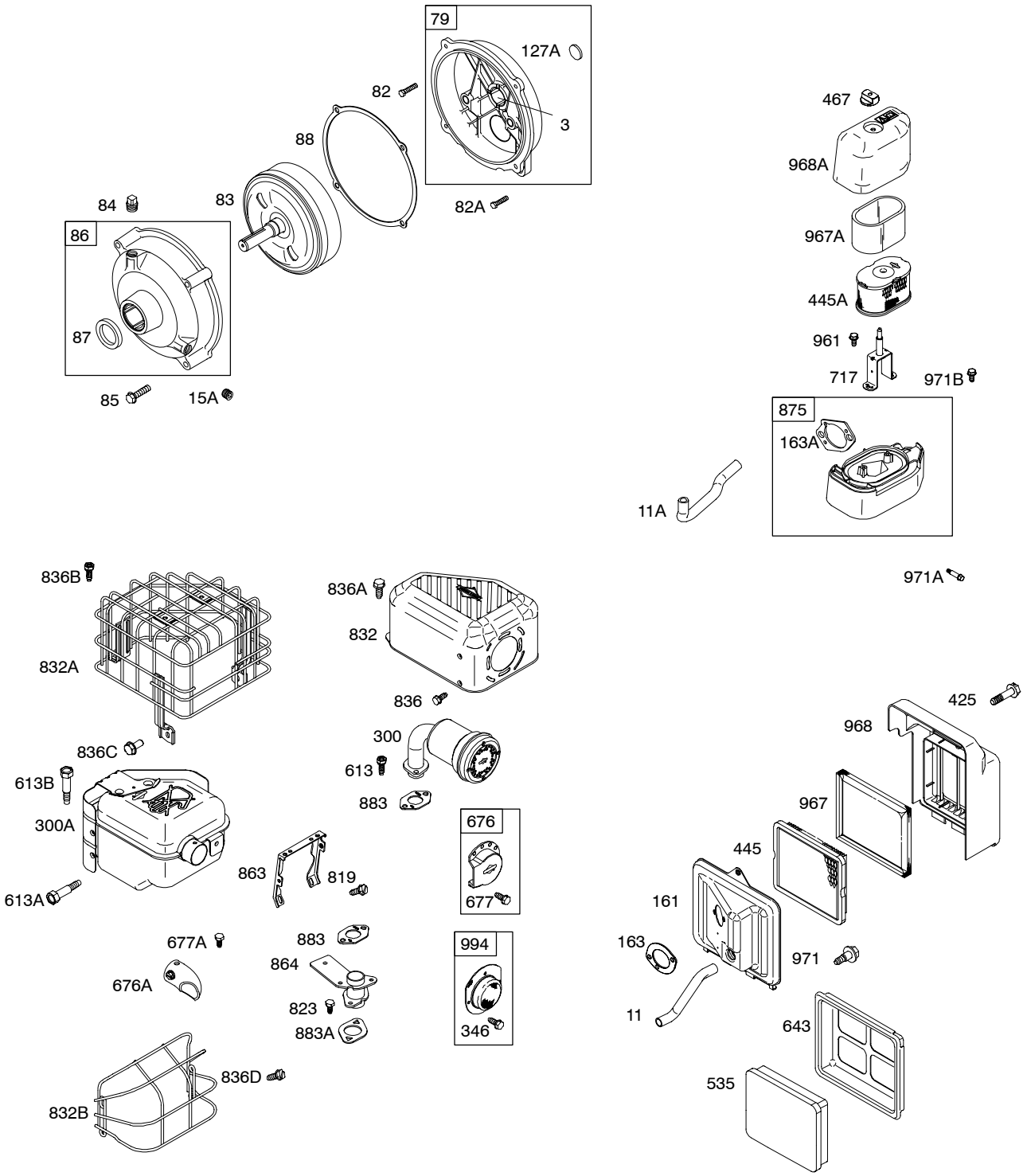

Illustrations cover a range of engines. Parts shown without corresponding text may not be used on your specific engine.

Assemblies include all parts shown in frames.

www.mymowerparts.com

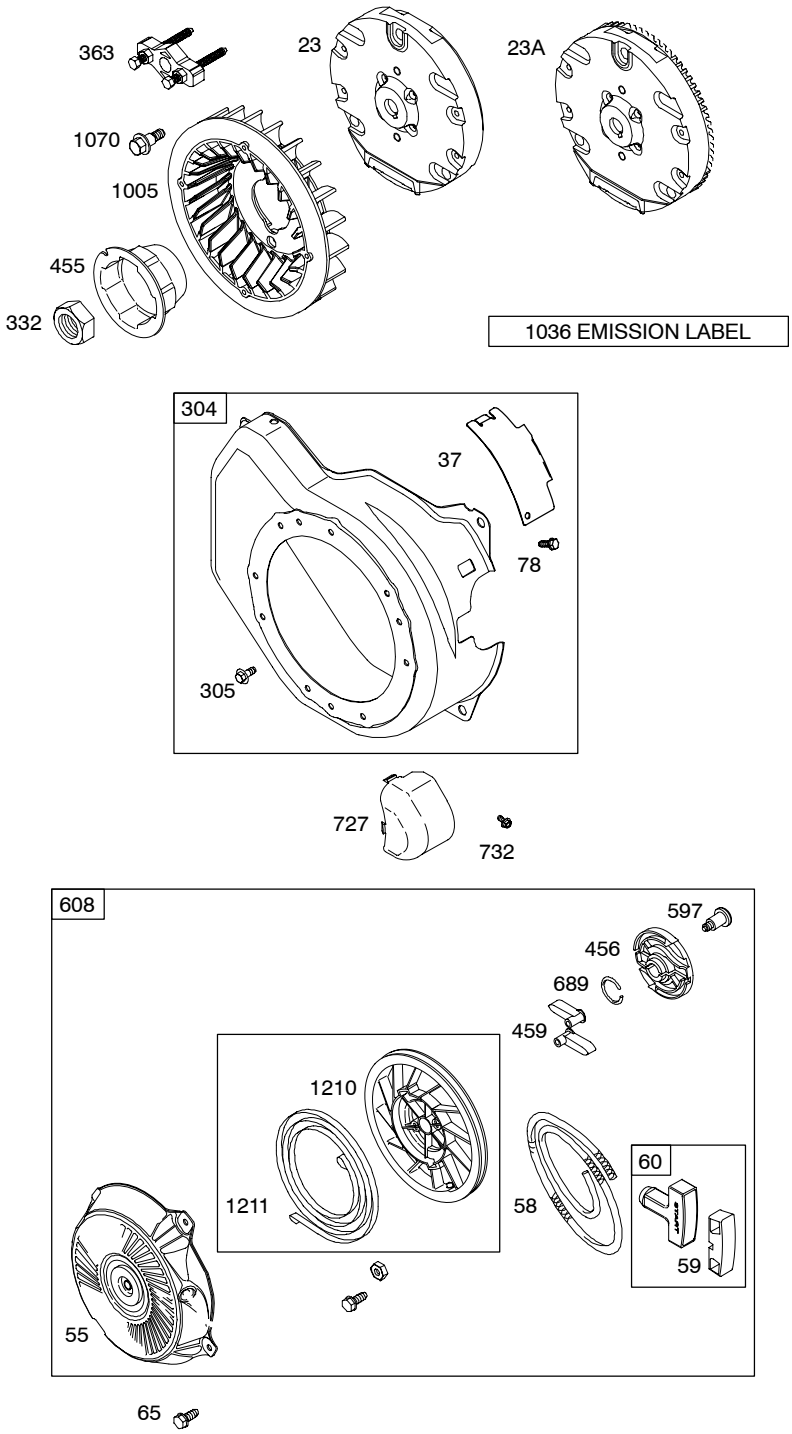

Illustrations cover a range of engines. Parts shown without corresponding text may not be used on your specific engine.

127300

REF. NO.	PART NO.	DESCRIPTION
1	699505	Cylinder Assembly
		------- **Note** -----
		699490 Cylinder–Assembly Used on Type No(s). 0116.
2	399269	Kit–Bushing/Seal (Magneto Side)
3	★299819S	Seal–Oil (Magneto Side)
5	699486	Head–Cylinder
7	★∅698210	Gasket–Cylinder Head
11	692600	Tube–Breather (Flat Panel Air Cleaner)
11A	693647	Tube–Breather (High Mount Air Cleaner)
12	★699485	Gasket–Crankcase
13	699482	Screw (Cylinder Head)
15	691686	Plug–Oil Drain (Square Head)
15A	691682	Plug–Oil Drain (Flush)
16	699443	Crankshaft
		------- **Note** -----
		699451 Crankshaft Used on Type No(s). 0111, 0126, 0131, 0154, 0171, 0173.
		699442 Crankshaft Used on Type No(s). 0127, 0138, 0169, 0170, 0176.
		699441 Crankshaft Used on Type No(s). 0116, 0141, 0161.
		699444 Crankshaft Used on Type No(s). 0049, 0134, 0139, 0152, 0153, 0163.
		699445 Crankshaft Used on Type No(s). 0112, 0145.
		699452 Crankshaft Used on Type No(s). 0113.
17	692517	Bearing–Ball
18	699804	Cover–Crankcase
		------- **Note** -----
		699696 Cover–Crankcase Used on Type No(s). 0112.
18A	699672	Cover–Crankcase
18B	699761	Cover–Crankcase
20	★692550	Seal–Oil (PTO Side)
20A	★694171	Seal–Oil (PTO Side)
21	281658S	Cap–Oil Fill
22	699478	Screw (Crankcase Cover/ Sump)
23	699488	Flywheel
23A	699514	Flywheel Used on Type No(s). 0118, 0126, 0169.
24	222698S	Key–Flywheel
25	792004	Piston Assembly (Standard) (Used After Code Date 05030800).
		------- **Note** -----
		499627 Piston Assembly (Standard) (Used Before Code Date 05030900).
		791325 Piston Assembly (.020" Oversize) (Used After Code Date 05030800).
		692789 Piston Assembly (.020" Oversize) (Used Before Code Date 05030900).
26	791969	Ring Set (Standard) (Used After Code Date 05030800).
		------- **Note** -----
		499631 Ring Set (Standard) (Used Before Code Date 05030900).
		791324 Ring Set (.020" Oversize) (Used After Code Date 05030800).
		692786 Ring Set (.020" Oversize) (Used Before Code Date 05030900).
27	691866	Lock–Piston Pin
28	499423	Pin–Piston
29	690124	Rod–Connecting
30	692562	Dipper–Connecting Rod
32	691664	Screw (Connecting Rod)
32A	695759	Screw (Connecting Rod)
33	499642	Valve–Exhaust
34	499641	Valve–Intake
35	691304	Spring–Valve (Intake)
36	691304	Spring–Valve (Exhaust)
37	699661	Guard–Flywheel
40	692194	Retainer–Valve
45	690977	Tappet–Valve
46	693404	Camshaft
51	★●◆∅692555	Gasket–Intake
55	691422	Housing–Rewind Starter
58	693389	Rope–Starter (Cut to Required Length)
59	490653	Grip–Insert
60	490652	Grip–Starter Rope (2 Piece)
65	699228	Screw (Rewind Starter)

★ Included in Engine Gasket Set–Ref. No.358.
● Included in Carburetor Overhaul Kit–Ref. No. 121.
◆ Included in Carburetor Gasket Set–Ref. No. 977.
∅ Included in Valve Gasket Set–Ref. No 1095.

Illustrations cover a range of engines. Parts shown without corresponding text may not be used on your specific engine.

www.mymowerparts.com

REF. NO.	PART NO.	DESCRIPTION
78	699205	Screw (Flywheel Guard)
79	694511	Case–Gear Reduction
82	690369	Screw (Gear Reduction Case)
82A	790197	Screw (Gear Reduction Case)
83	690374	Shaft–Auxiliary Drive
84	691121	Plug–Breather
85	692551	Screw (Gear Cover to Gear Reduction)
86	690608	Cover–Gear
87	691582	Seal–Gear Reduction
88	691600	Gasket–Gear Reduction Cover
95	691636	Screw (Throttle Valve)
97	690024	Shaft–Throttle
98	398185	Kit–Idle Speed (Carburetor)
104	●691242	Pin–Float Hinge
108	692567	Valve–Choke
		------- **Note** -----
		699111 Valve–Choke Used on Type No(s). 0127, 0138, 0169, 0170, 0176.
109	690023	Shaft–Choke
109A	693628	Shaft–Choke
117	697355	Jet–Main (Standard)
		------- **Note** -----
		498976 Jet–Main (Standard) Used on Type No(s). 0127, 0169, 0170, 0176.
		498975 Jet–Main (Standard) Used on Type No(s). 0138.
118	494870	Jet–Main (High Altitude)
		------- **Note** -----
		694975 Jet–Main (High Altitude) Used on Type No(s). 0127, 0169, 0170, 0176.
		------- **Note** -----
		497466 Jet–Main (High Altitude) Used on Type No(s). 0138.
121	696998	Kit–Carburetor Overhaul
122	★●693749	Spacer–Carburetor
125	697354	Carburetor
		------- **Note** -----
		698860 Carburetor Used on Type No(s). 0127, 0169, 0170, 0176.
		698859 Carburetor Used on Type No(s). 0138.
		697028 Carburetor Used on Type No(s). 0112, 0113, 0123, 0134, 0157.
127	●691739	Plug–Welch
		------- **Note** -----
		694468 Plug–Welch Used on Type No(s). 0127, 0169, 0170, 0176.
127A	691585	Plug–Welch
130	691181	Valve–Throttle
130A	691203	Valve–Throttle
		Used on Type No(s). 0127, 0138, 0169, 0170, 0176.
133	398187	Float–Carburetor
134	●398188	Kit–Needle/Seat
137	●◆693981	Gasket–Float Bowl
146	690979	Key–Timing
155	★698214	Plate–Cylinder Head
161	699207	Base–Air Cleaner (Flat Panel Air Cleaner)
		------- **Note** -----
		699504 Base–Air Cleaner (Flat Panel Air Cleaner) Used on Type No(s). 0169, 0170.
163	★●◆696024	Gasket–Air Cleaner (Flat Panel Air Cleaner)
163A	★●◆696979	Gasket–Air Cleaner (High Mount Air Cleaner)
170	699818	Stud (Crankcase Cover)
186	692317	Connector–Hose
187	791766	Line–Fuel (Cut to Required Length) (Used After Code Date 05063000).
		------- **Note** -----
		691050 Line–Fuel (Cut to Required Length) (Used Before Code Date 05070100).
187A	791867	Line–Fuel (Molded) (Used After Code Date 05063000).
		------- **Note** -----
		692601 Line–Fuel (Molded) (Used Before Code Date 05070100).

★ Included in Engine Gasket Set–Ref. No.358.
● Included in Carburetor Overhaul Kit–Ref. No. 121.
◆ Included in Carburetor Gasket Set–Ref. No. 977.
∅ Included in Valve Gasket Set–Ref. No 1095.

Illustrations cover a range of engines. Parts shown without corresponding text may not be used on your specific engine.

www.mymowerparts.com

127300

REF. NO.	PART NO.	DESCRIPTION
188	699479	Screw (Control Bracket)
190	699220	Screw (Fuel Tank)
192	694543	Adjustor–Rocker Arm
209	692571	Spring–Governor
		------- **Note** -----
		693206 Spring–Governor Used on Type No(s). 0111, 0116, 0125, 0141.
209A	691278	Spring–Governor
219	693578	Gear–Governor
220	691724	Washer (Governor Gear)
222	699589	Bracket–Control
222A	699493	Bracket–Control
		------- **Note** -----
		699590 Bracket–Control Used on Type No(s). 0127, 0138, 0176.
227	692573	Lever–Governor Control
238	691300	Valve–Cap
240	298090S	Filter–Fuel
265	691024	Clamp–Casing
267	699492	Screw (Casing Clamp)
268	691025	Casing–Control Wire (Cut to Required Length)
269	691026	Wire–Control (Cut to Required Length)
270	691027	Nut (Control Wire Casing)
271	691028	Lever–Control
271A	694256	Lever–Control
276	●271716	Washer–Sealing
281	699639	Panel–Control
286	698611	Module–Oil Sensor
287	699629	Screw (Dipstick Tube)
300	693593	Muffler
300A	699231	Muffler
304	699598	Housing–Blower
305	699480	Screw (Blower Housing)
306	693610	Shield–Cylinder
307	699483	Screw (Cylinder Shield)
309	694504	Motor–Starter
310	690323	Screw (Starter Motor)
311	497608	Brush Set
332	699359	Nut (Flywheel)
333	695711	Armature–Magneto
334	699477	Screw (Magneto Armature)
337	491055S	Plug–Spark (Resistor)
		------- **Note** -----
		691043 Plug–Spark (EMS)
346	690661	Screw (Spark Arrester)
347	697854	Switch–Rocker
		------- **Note** -----
		698338 Switch–Rocker Used on Type No(s). 0122, 0139, 0154, 0156, 0171.
356	693651	Wire–Stop
356A	692390	Wire–Stop
356B	692602	Wire–Stop
356C	695630	Wire–Stop
356K	791765	Wire–Stop
358	699638	Gasket Set–Engine
363	19069	Puller–Flywheel
364	695693	Terminal–Oil Plug
365	699484	Screw (Carburetor)
383	19374S	Wrench–Spark Plug
415	693463	Plug
425	699208	Screw (Air Cleaner Cover)
427	694255	Nut (Control Bracket)
445	491588S	Filter–Air Cleaner Cartridge (Flat Panel)
445A	697029	Filter–Air Cleaner Cartridge (High Mount)
455	692591	Cup–Flywheel
456	692299	Plate–Pawl Friction
459	281505S	Pawl–Ratchet
467	691668	Knob–Air Cleaner
474	694457	Alternator Used on Type No(s). 0169.
		------- **Note** -----
		695730 Alternator Used on Type No(s). 0126.
504	694254	Washer Set–Friction
505	691251	Nut (Governor Control Lever)
510	499308	Drive–Starter
513	692024	Drive–Clutch
522	697689	Plug–Dipstick/Fill
523	693618	Dipstick
524	281370S	Seal–Dipstick Tube
524	281370S	Seal–Dipstick Tube
544	692966	Armaturel–Starter
535	696263	Filter–Air Cleaner Foam
552	692346	Bushing–Governor Crank
562	691119	Bolt (Governor Control Lever)
578	692306	Wire Assembly
597	691696	Screw (Pawl Friction Plate)
601	95162S	Clamp–Hose
608	693394	Starter–Rewind

★ Included in Engine Gasket Set–Ref. No.358.
● Included in Carburetor Overhaul Kit–Ref. No. 121.
◆ Included in Carburetor Gasket Set–Ref. No. 977.
∅ Included in Valve Gasket Set–Ref. No 1095.

Illustrations cover a range of engines. Parts shown without corresponding text may not be used on your specific engine.

www.mymowerparts.com

For Briggs & Stratton Discount Parts Call 606-678-9623 or 606-561-4983

REF. NO.	PART NO.	DESCRIPTION
613	699209	Screw (Muffler)
613A	699230	Screw (Muffler)
613B	697812	Screw (Muffler)
615	692576	Retainer–Governor Shaft
616	692547	Crank–Governor
619	699230	Screw (Cylinder Head Plate)
621	692310	Switch–Stop
632	693408	Spring/Link–Mechanical Governor
633	●◆693867	Seal–Choke/Throttle Shaft
633A	●◆691321	Seal–Choke/Throttle Shaft
635	692076	Boot–Spark Plug
635A	692927	Boot–Spark Plug
643	696264	Retainer–Air Filter
652	699755	Screw (Support Bracket)
652A	699230	Screw (Support Bracket)
663	699206	Screw (Control Panel)
668	694257	Spacer
675	691261	Washer (Brush Retainer)
676	393757	Deflector–Muffler
676A	697816	Deflector–Muffler
677	690661	Screw (Muffler Deflector)
677A	699776	Screw (Muffler Deflector)
689	691855	Spring–Friction
692	690572	Spring–Detent
697	790537	Screw (Starter Motor) (Used After Code Date 04110800).
		------- **Note** -----
		699773 Screw (Starter Motor) (Used Before Code Date 04110900).
717	693462	Bracket–Air Cleaner
718	690959	Pin–Locating
727	698039	Cover–Starter Drive
732	699200	Screw (Starter Drive Cover)
741	695087	Gear–Timing
742	692564	Retainer–E Ring
746	692566	Gear–Idler
773	694258	Retainer
783	692353	Gear–Pinion
797	691029	Nut (Brush Retainer)
799	699202	Screw (Oil Sensor)
801	694482	Cap–Drive
802	691286	Cap–End
803	693757	Housing–Starter
819	699233	Screw (Muffler Bracket)
823	699209	Screw (Muffler Adapter)
830	694544	Stud–Rocker Arm
832	693583	Guard–Muffler
832A	697818	Guard–Muffler
832B	696516	Guard–Muffler
836	699203	Screw (Muffler Guard)
836A	699632	Screw (Muffler Guard)
836B	699209	Screw (Muffler Guard)
836C	699234	Screw (Muffler Guard)
836D	699204	Screw (Muffler Guard)
842	691031	Seal–O Ring (Dipstick Tube)
847	693617	Dipstick/Tube Assembly
851	493880S	Terminal–Spark Plug
863	699229	Bracket–Muffler
864	699232	Adapter–Muffler
868	★∅692044	Seal–Valve
875	697030	Base–Air Cleaner (High Mount)
883	★691893	Gasket–Exhaust
883A	★692237	Gasket–Exhaust
890	790203	Bracket–Support
914	699481	Screw (Rocker Cover) (Bottom)
914A	692557	Screw (Rocker Cover) (Top)
914B	697551	Screw (Rocker Cover) (Center)
957	694261	Cap–Fuel Tank
958	698180	Valve–Fuel Shut Off
961	698304	Screw (Air Cleaner Bracket)
967	493537S	Filter–Pre Cleaner (Flat Panel)
967A	273356S	Filter–Pre Cleaner (High Mount)
968	692584	Cover–Air Cleaner (Flat Panel Air Cleaner)
968A	693460	Cover–Air Cleaner (High Mount)
971	690370	Screw (Air Cleaner Base)
971A	690349	Screw (Air Cleaner Base)
971B	699629	Screw (Air Cleaner Base)
972	694260	Tank–Fuel
975	493640	Bowl–Float
977	697001	Gasket Set–Carburetor
993	∅694088	Gasket–Cylinder Head Plate
994	399541	Arrester–Spark
1005	692592	Fan–Flywheel
1019	694852	Kit–Label
1022	★∅691890	Gasket–Rocker Cover
1023	499924	Cover–Rocker Arm
1026	790287	Rod–Push
1029	691230	Arm–Rocker
1034	691343	Guide–Push Rod

★ Included in Engine Gasket Set–Ref. No.358.
● Included in Carburetor Overhaul Kit–Ref. No. 121.
◆ Included in Carburetor Gasket Set–Ref. No. 977.
∅ Included in Valve Gasket Set–Ref. No 1095.

Illustrations cover a range of engines. Parts shown without corresponding text may not be used on your specific engine.

www.mymowerparts.com

For Briggs & Stratton Discount Parts Call 606-678-9623 or 606-561-4983

127300

REF. NO.	PART NO.	DESCRIPTION
1036		Label–Emission (Available From An Authorized Briggs & Statton Sevice Dealer)
1051	**691265**	Ring–Retaining
1052	**790141**	Sensor–Oil
1054	**280275**	Cable–Tie
1058	**276355**	Owner's Manual
1070	**699201**	Screw (Flywheel Fan)
1090	**691293**	Retainer–Brush
1095	**698215**	Gasket Set–Valve
1119	**699772**	Screw (Alternator)
1210	**498144**	Pulley/Spring Assembly (Pulley)
1211	**498144**	Pulley/Spring Assembly (Spring)
1305	**699691**	Screw (Oil Sensor Module)
1330	**272147**	Repair Manual

★ Included in Engine Gasket Set–Ref. No.358.
● Included in Carburetor Overhaul Kit–Ref. No. 121.
◆ Included in Carburetor Gasket Set–Ref. No. 977.
∅ Included in Valve Gasket Set–Ref. No 1095.

Illustrations cover a range of engines. Parts shown without corresponding text may not be used on your specific engine.

www.mymowerparts.com