www.mymowerparts.com

FORM MS-8184-11/89
REPLACES FORM MS-8184-7/87
FILE IN SECT. 2 OF SERVICE MANUAL

Illustrated Parts List
Model Series
80200 to 80299

TYPE NUMBERS
5630, 8044, 8111,
8130 through 8142
8544, 8611
8630 through 8651
8700 through 8705

TO FIND

THE CORRECT NUMBER OF THE PART YOU NEED:

FOLLOW THE INSTRUCTIONS BELOW

A. Refer to Engine Model, Type and Code Number that is stamped on the blower housing of engine. Engine type numbers such as 012301 are listed herein only as 0123. The two digits (01 or 02, etc.) to the right of the space are not needed for parts identification. Then use the Illustrated Parts List covering the Model Series.

B. Refer to Illustrated Parts section and compare the old part with illustration. The number on the illustration is the Reference Number. Assemblies include all parts shown in frames. All parts shown in assembly frames on which individual reference numbers are given can be purchased separately.

C. After the Reference Number has been identified, refer to the Numerical Parts List, where Reference and Master Part Number are listed. THE MASTER PART IS USED ON ALL TYPE NUMBERS EXCEPT THOSE TYPE NUMBERS UNDER "NOTE".

D. If a "Note" appears below the Master Part Number, this means that this part differs from the Master Part for certain types. If the Type number is listed under "Note", order the part referred to.

E. If the Engine Type Number does not appear after any part number listed under "Note", use the Master Part Number.

F. For Type Numbers higher than those covered by this book, please refer to the factory if you are unable to identify the part by comparison.

PRINTED IN U.S.A.

BRIGGS & STRATTON®

COPYRIGHT©

K&T Saw Shop 606-678-9623 or 606-561-4983

ww.mymowerparts.com

80200 to 80299

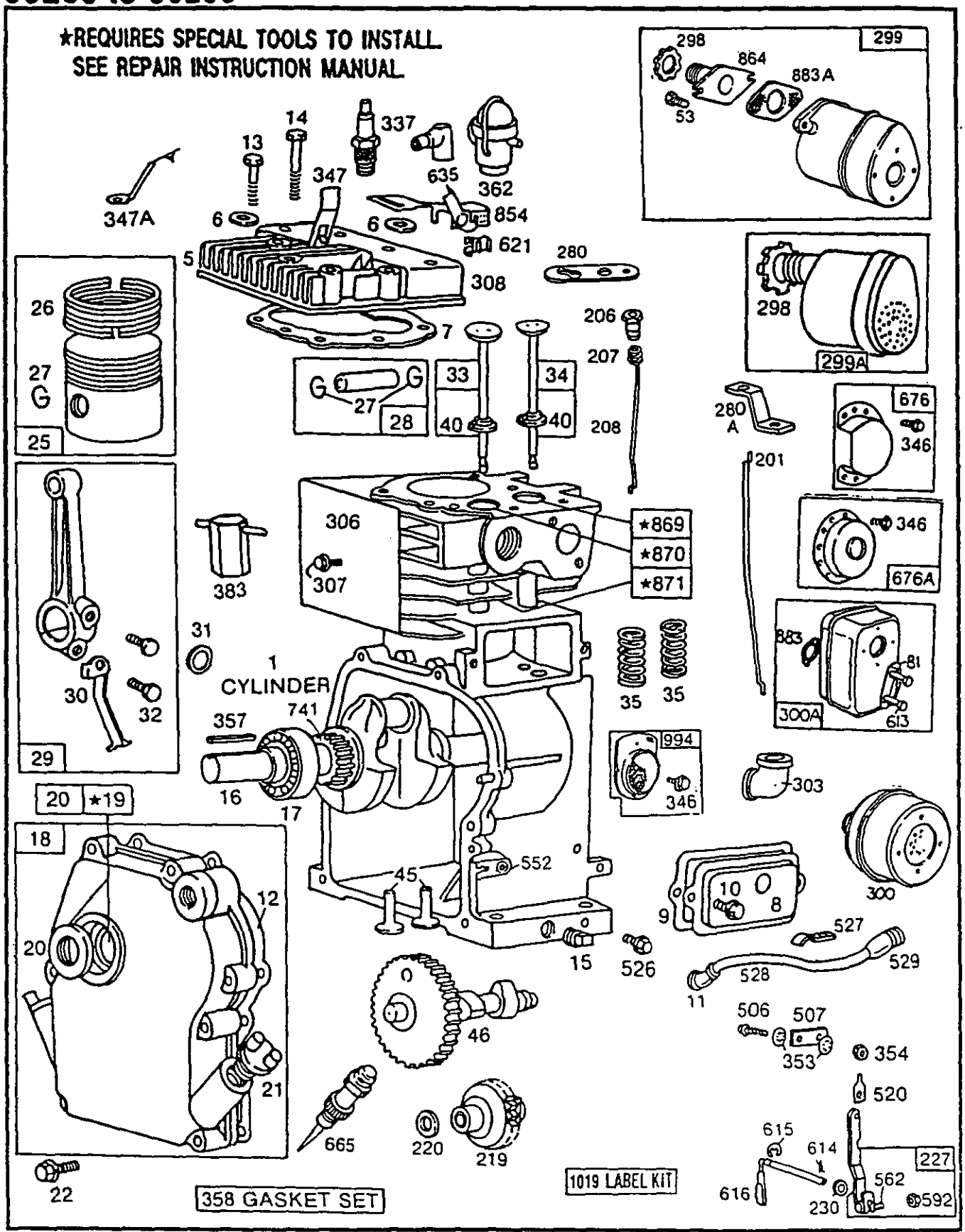

Assemblies include all parts shown in frames.

K&T Saw Shop 606-678-9623 or 606-561-4983

www.mymowerparts.com

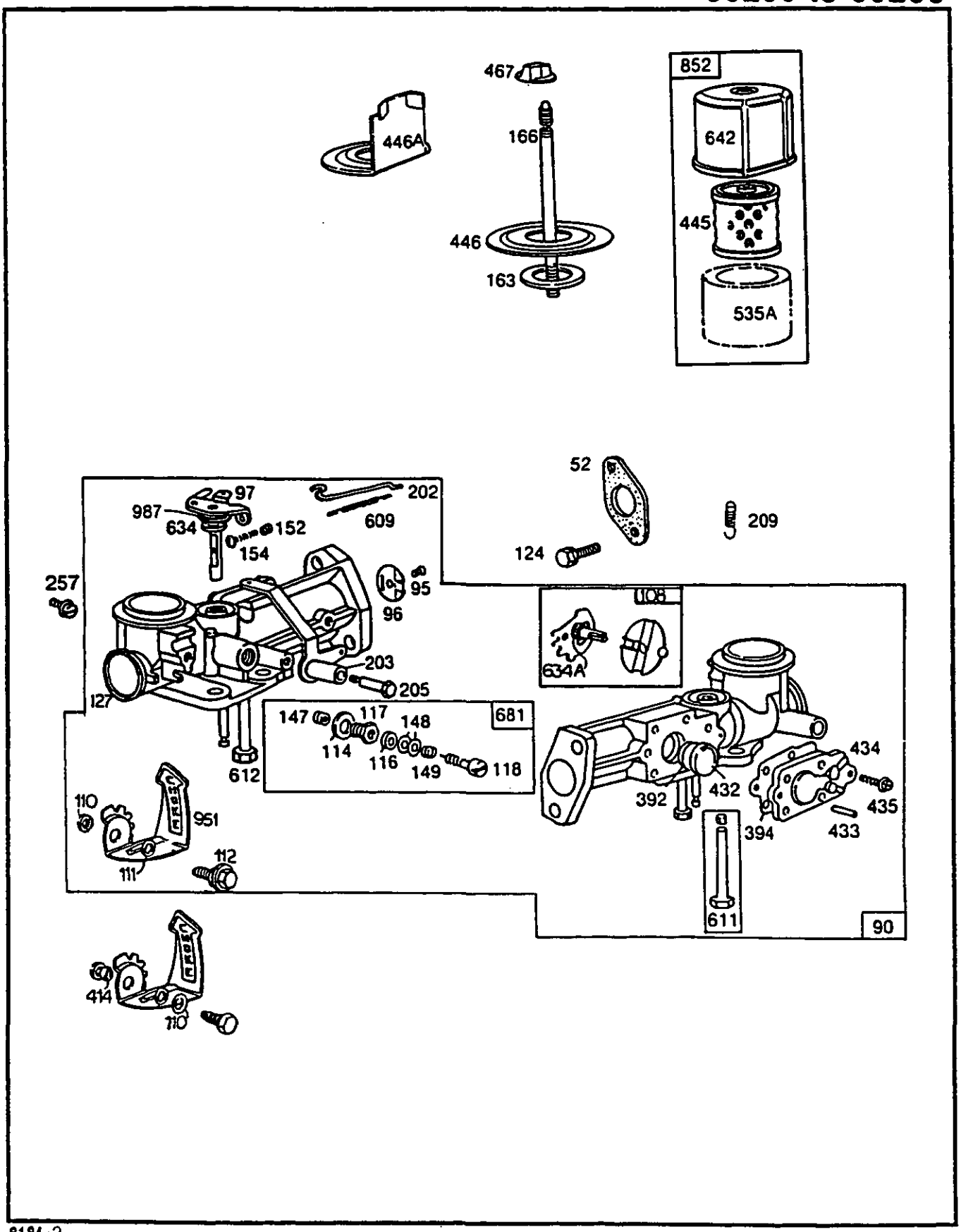

8184-2

Assemblies include all parts shown in frames.

109

K&T Saw Shop 606-678-9623 or 606-561-4983

w.mymowerparts.com

80200 to 80299

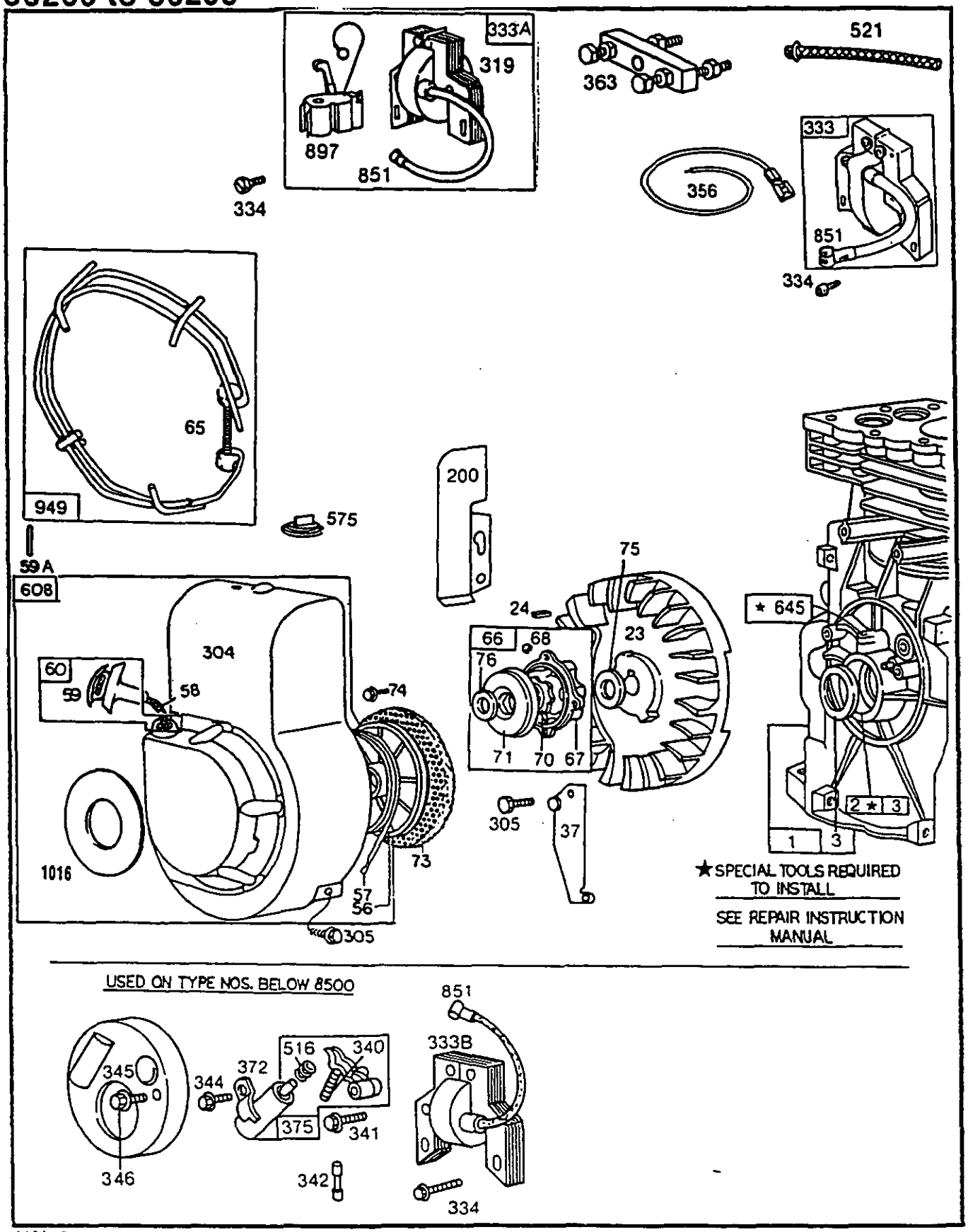

8184-3

Assemblies include all parts shown in frames.

109

K&T Saw Shop 606-678-9623 or 606-561-4983

www.mymowerparts.com

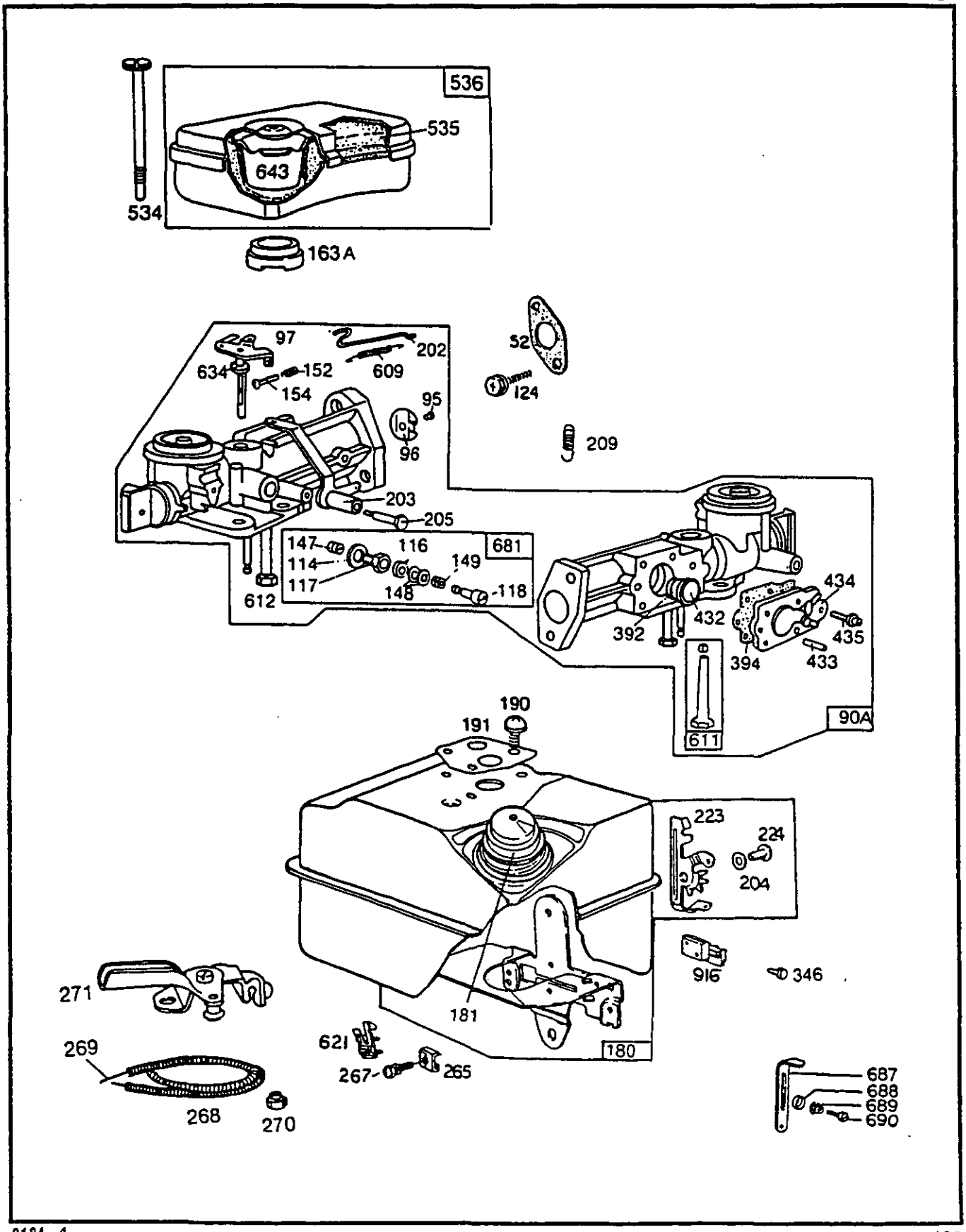

8184-4

Assemblies include all parts shown in frames.

109

K&T Saw Shop 606-678-9623 or 606-561-4983

w.mymowerparts.com

80200 to 80299

REF. NO.	PART NO.	DESCRIPTION
1	395879	Cylinder Assembly
2	293708	Bushing—Cylinder (Plain)
	Note:	Requires special tools for installation.
3	299819	Seal—Oil
5	210812	Head—Cylinder
6	22963	Washer
7	* 27670	Gasket—Cylinder Head
8	294178	Breather—Valve Chamber
9	* 27549	Gasket—Valve Cover
10	93394	Screw—Valve Cover Mounting Sem
11	66578	Grommet—Breather Tube
12	* 270833	Gasket—Crankcase—.015" thick (Standard)
	* 270895	Gasket—Crankcase—.005" thick
	* 270896	Gasket—Crankcase—.009" thick
13	93111	Screw—Cylinder Head (1-15/16" long)
	Note:	**93583** Stud—Cylinder Head (1) **22963** Washer Used on Type Nos. 8131, 8132, 8134, 8631, 8633, 8638, 8647, 8702.
14	93113	Screw—Cylinder Head (2-5/16" long)
	Note:	**93583** Stud—Cylinder Head **22963** Washer Used on Type Nos. 8131, 8132, 8134, 8631, 8633, 8638, 8647, 8702.
15	91249	Plug—Pipe, 1/4" Std., Square Head
	Note:	**93448** Plug—Oil Drain (Hex. Socket Head) Used on Type Nos. 8140, 8630, 8637, 8645, 8649, 8700, 8701. **To Replace Crankshaft Gear Pin, Order Part No. 230978, Only Used with Crankshaft with Loose Gears.**

* Included in Gasket Set—Part No. 397144

REF. NO.	PART NO.	DESCRIPTION
16	397250	Crankshaft
	Note:	**260113** Crankshaft Used on Type Nos. 8044, 8133, 8134, 8135, 8136, 8139, 8142, 8544, 8632, 8633, 8636, 8640, 8643, 8644, 8646. **261450** Crankshaft Used on Type Nos. 8131, 8132, 8137, 8631, 8635, 8638, 8647, 8702. **397251** Crankshaft Used on Type Nos. 5630, 8650, 8651, 8705. **397253** Crankshaft Used on Type No. 8141. **397255** Crankshaft Used on Type Nos. 8642, 8648. **399004** Crankshaft Used on Type Nos. 8138, 8641. **399006** Crankshaft Used on Type Nos. 8703, 8704. **399010** Crankshaft Used on Type Nos. 8140, 8630, 8645, 8700, 8701.
17	99158	Bearing—Ball
18	394820	Cover Assy.—Crankcase Used on *Model 80202* Series;
	395466	Cover Assy.—Crankcase Used on *Model 80212* Series; For Exceptions, see Note.
	395259	Cover Assy.—Crankcase Used on *Model 80232* Series.
	Note:	**394909** Cover Assy.—Crankcase Used on Type Nos. 8138, 8641.
19	293708	Bushing—Crankcase Cover (Plain)

REF. NO.	PART NO.	DESCRIPTION
	Note:	Bushings require special tools for installation.
20	392986	Seal—Oil Used on *Model 80212* Series. For Exceptions, see Note.
	393862	Seal—Oil Used on *Model 80202* Series.
	393812	Seal—Oil Used on *Model 80232* Series.
	Note:	**392838** Oil Seal and Spacer Used on Type Nos. 8138, 8641.
21	66768	Plug—Oil Filler
22	93032	Screw—Crankcase Cover Mounting Sem
	Note:	**92747** Screw—Crankcase Mounting Sem Used on two top holes to mount cover on *Model 80212* Series. **93656** Stud **90832** Washer—Lock Used to mount Crankcase Cover on Type Nos. 8140, 8630, 8645, 8700, 8701.
23	296884	Flywheel—Magneto
	Note:	**395653** Flywheel—Magneto Used on Type Nos. 8137, 8635.
24	222698	Key—Flywheel
25	295587	Piston Assembly—Std.
	295588	Piston Assembly—.010" O.S.
	295589	Piston Assembly—.020" O.S.
	295590	Piston Assembly—.030" O.S.
	RING SETS:	
	Note:	For Chrome Piston Ring Set—Standard Size—Order Part No. **297201**.
26	294232	Ring Set—Std. Piston
	294224	Ring Set—.010" O.S. Piston

K&T Saw Shop 606-678-9623 or 606-561-4983

www.mymowerparts.com

REF. NO.	PART NO.	DESCRIPTION
	294225	Ring Set—.020" O.S. Piston
	294226	Ring Set—.030" O.S. Piston
27	26026	Lock—Piston Pin
28	298909	Pin Assembly—Piston—Standard
	298908	Pin Assembly—Piston—.005" O.S.
29	294367	Rod Assy.—Connecting
	Note:	For Connecting Rod with .020" undersize Crankpin Bore—Order No. 296079.
30	220670	Dipper—Connecting Rod
31	222282	Washer—Connecting Rod
32	94404	Screw—Connecting Rod
33	296676	Valve—Exhaust (Grooved Stem—Includes Retainer No. 93312)
	Note:	260443 Valve—Exhaust (with hole in stem) (COBALITE®) Used on Type Nos. 8044, 8130, 8139, 8544, 8634, 8636, 8646, 8650.
34	296677	Valve—Intake (Grooved Stem—Includes Retainer No. 93312)
35	260552	Spring—Valve
	Note:	26826 Spring—Exhaust Valve Used on Type Nos. 8044, 8130, 8139, 8544, 8634, 8636, 8646, 8650.
37	220971	Guard—Flywheel
40	93312	Retainer—Valve Spring Used with valves with groove in stem.
	Note:	292259 Rotocap—Exhaust Valve 230126 Pin—Rotocap Exhaust Valve Retainer 230127 Retainer—Exhaust Valve Rotocap Used on Type Nos. 8044, 8130, 8139, 8544, 8634, 8636, 8646, 8650.
45	230173	Tappet—Valve
46	394800	Gear—Cam
52	* 27355	Gasket—Intake Elbow Mounting (2 used)
53	94523	Screw—Hex Head
56	280117	Pulley—Rewind Starter
57	490179	Spring—Rewind Starter
58	66734	Rope—Starter (48-5/8")
	Note:	If longer rope is needed, Order No. 66684 and cut to required length.
59	396892	Insert—Starter Grip
59A	230228	Pin—Starter Grip
60	393152	Grip—Starter Rope
65	94124	Screw—Guard Retaining
66	399671	Clutch Assembly—Rewind Starter
67	394897	Housing—Starter Clutch
68	63770	Ball—Clutch
70	298436	Ratchet—Rewind Starter
71	394506	Washer—Clutch Retainer (Rubber Coated)
	Note:	221653 Washer—Clutch Retainer (Non-Coated)
73	221661	Screen—Rotating
74	93490	Screw—Rotating Screen Mounting Sem
75	220865	Washer—Spring
76	68238	Washer—Ratchet Sealing
81	223256	Lock—Screw
90	398124	Carburetor Assembly (2 Quart)
	Note:	398112 Carburetor Assembly (3 Quart) Used on Type Nos. 5630, 8639, 8644.
90A	394828	Carburetor Assembly (For 2 Quart Tank)
	Note:	394878 Carburetor Assembly (For 3 Quart Tank) Used on Type Nos. 8135, 8639, 8644.
95	93499	Screw—Throttle Valve Mounting Sem
96	211203	Valve Throttle
97	297468	Shaft and Lever—Throttle
108	397134	Valve Group—Choke
110	66432	Washer—Choke Lever
111	94060	Washer—Wave
112	94164	Screw—Choke Lever (Used after Code Date 85121200)
	Note:	93686 Screw—Choke Lever (Used before Code Date 85121300)
114	66594	Gasket—Needle Valve Nut
116	65978	Packing—Needle Valve
117	230590	Nut—Needle Valve
118	23433	Valve—Needle
124	93357	Screw—Hex. Hd.
127	22831	Plug—Welch
147	230591	Seat—Needle Valve
148	22235	Washer—Needle Valve (2)
149	26336	Spring—Needle Valve
152	260575	Spring Throttle Adjustment
154	93527	Screw—Machine, Rd.
163	271139	Gasket—Air Cleaner
163A	27660	Gasket—Air Cleaner Mounting
166	231332	Stud—Air Cleaner
180	397869	Tank Assy.—Fuel (2 Quart)
	Note:	398141 Tank Assy.—Fuel (3 Quart) Used on Type Nos. 5630, 8135, 8639, 8644.
181	298425	Cap—Fuel Tank
	Note:	394818 Cap—Fuel Tank Used on Type Nos. 8140, 8630, 8644, 8645, 8700, 8701. 397567 Cap—Fuel Tank Used on Type No. 5630.
190	93440	Screw—Fuel Tank Mounting Sem
191	* 271592	Gasket—Fuel Tank Mounting
200	221456	Guide—Air
201	261590	Link—Governor
202	260678	Link—Throttle
203	394670	Crank—Bell

* Included in Gasket Set—Part No. 397144

K&T Saw Shop 606-678-9623 or 606-561-4983

w.mymowerparts.com

80200 to 80299

REF. NO.	PART NO.	DESCRIPTION
204	222962	Bushing—Governor Control Lever
205	93838	Screw, Shoulder
206	231266	Nut
207	26855	Spring
208	261990	Rod—Control (Used after Code Date 84041700)
	Note:	261653 Rod—Control (Used before Code Date 84041800)
209	261130	Spring—Air Vane Governor
	Note:	260902 Spring—Air Vane Governor Used on Type Nos. 8130, 8634, 8648.
219	391737	Gear—Governor
220	221551	Washer—Thrust
223	223904	Lever—Governor Control (Used After Code Date 86111500)
	Note:	223097 Lever—Governor Control (Used Before Code Date 86111600)
224	93491	Rivet
227	394541	Lever Assy.—Governor
230	222450	Washer—Gov. Lever
265	221535	Clamp—Casing
267	93496	Screw—Sem
268	66986	Casing—Control Wire—48" long
	Note:	If longer casing is needed, specify length in inches; if a shorter casing is needed order No. 66986 and cut to required length.
269	26099	Wire—Control 54" long
	Note:	If longer wire is needed, specify length in inches; if shorter wire is needed order No. 26099 and cut to required length.
270	63426	Locknut—Control Wire Casing
271	290568	Lever Assy.—Control
280	223236	Strap (Used after Code Date 84041700)
280A	221384	Strap (Used before Code Date 84041800)
298	220859	Locknut—Muffler
299	492591	Muffler—Exhaust
299A	392811	Muffler—Exhaust (Lo-Tone)
300	394569	Muffler—Exhaust
300A	395959	Muffler—Exhaust
303	91943	Elbow—Exhaust (90° Street)
305	93158	Screw—Sem
306	224377	Shield—Cylinder (Used After Code Date 89102200.)
	Note:	220478 Shield—(Used Before Code Date 89102300.)
307	93490	Screw—Cylinder Shield Mounting Sem
308	223390	Cover—Cylinder Head
319	298502	Armature Assembly (Less Trigger Coil)
	Note:	398428 Armature Assy. Used for 14-3/8" Ignition Cable.
333	398593	Armature—Magneto
333A	398593	Armature—Group
333B	298502	Armature—Magneto
334	93381	Screw—Armature Mounting Sem
337	298809	Plug—Spark (with Gasket) (1-1/2" High—37-42 M.M.)
	Note:	29693 Plug—Spark (with Gasket) (2" High—51 M.M.) 293918 Plug—Spark (with Gasket) (1-1/2" High—37 M.M.) (Resistor Type)
340	26018	Spring—Breaker Arm
341	93381	Screw—Sem
342	65704	Plunger—Breaker Point
344	93042	Screw—Condenser Clamp Mounting Sem
345	220366	Cover—Breaker Point and Condenser
346	93705	Screw—Sem
347	220884	Switch—Stop (For 1-1/2" High—37 & 42 M.M. Spark Plug)
347A	298926	Switch—Stop (For 1-1/2" High—37-42 M.M. Spark Plug)
353	92791	Washer—Lock—Shakeproof
354	90576	Nut—Hex.—8-32
356	398808	Wire—Ground
	Note:	398874 Wire—Ground Used on Type Nos. 8647, 8648, 8649, 8650, 8702, 8703, 8705.
357	91539	Key—3/16" Square
358	397144	Gasket Set
362	291630	Shield—Spark Plug (with Stop Switch)
	Note:	89742 Shield—Spark Plug Used on Type No. 8132.
363	19069	Puller—Flywheel (Optional Accessory)
372	220477	Clamp—Condensor
375	294628	Breaker Points and Condenser Set
	Note:	299061 Ignition Kit Includes: 294628 Point Set 65704 Plunger 61760 Key—Flywheel (For Conversion to MAGNETRON® Ignition Order Part No. 394970)
383	89838	Wrench—Spark Plug
392	260455	Spring—Fuel Pump Diaphragm
394	270026	Diaphragm
414	231325	Spacer (Used before Code Date 85121300)
432	221377	Cap—Spring
433	93265	Pin—Diaphragm
434	210959	Cover—Diaphragm
435	93141	Screw—Diaphragm Cover
445	396424	Cartridge—Air Cleaner
446	222844	Base—Air Cleaner
446A	395642	Base—Air Cleaner

K&T Saw Shop 606-678-9623 or 606-561-4983

www.mymowerparts.com

REF. NO.	PART NO.	DESCRIPTION
467	212706	Knob—Air Cleaner
506	90200	Screw—Machine, Fil. Hd.—8-32 x 1/2"
507	66895	Insulator
516	260374	Spring—Connector
520	93722	Terminal—Spade
521	297973	Shielding—Ignition Cable
526	94408	Screw—Tank Bracket Mounting Sem
527	221514	Clamp—Breather Tube (Used with Rotary Choke Carburetors—Ref. 90)
	Note:	221279 Clamp—Breather Tube (Used with Pull Choke Carburetors—Ref. 90A)
528	231383	Tube—Breather (Used with Rotary Choke Carburetors—Ref. 90)
	Note:	230634 Tube—Breather (Used with Pull Choke Carburetors—Ref. 90A)
529	67838	Grommet—Breather Tube (Used with Rotary Choke Carburetors—Ref. 90)
	Note:	67608 Grommet—Breather Tube (Used with Pull Choke Carburetors—Ref. 90A)
534	94071	Screw—Air Cleaner (1/4" Diameter)
	Note:	93322 Screw—Air Cleaner (3/16" Diameter)
535	27987	Element—Air Cleaner
535A	271466	Element—Air Cleaner
536	397703	Cleaner Assy.—Air (For 1/4" Screw)
	Note:	296766 Cleaner Assembly—Air (For 3/16" Screw)
552	231079	Bushing—Governor Shaft
562	92613	Bolt—Governor Lever
575	396691	Stop Switch Assy.—Rotary
592	231082	Nut—Hex—10-24
608	398034	Starter Assy.—Rewind (10 o'clock)
	Note:	398035 Starter Assy.—Rewind (12 o'clock) Used on Type Nos. 8044, 8130, 8131, 8132, 8136, 8142, 8544, 8631, 8632, 8634, 8640, 8642, 8648, 8651, 8703, 8704, 8705.
609	260694	Spring—Throttle Link
611	391813	Fuel Pipe and Clip Assembly
612	296811	Pipe—Fuel (1-5/8" long) Plastic
613	94042	Screw—Hex. Hd. Shoulder
614	93306	Cotter—Hair Pin
615	93307	Retainer—E-Ring
616	231077	Crank—Governor
621	297472	Switch—Stop
634	271853	Washer—Throttle Shaft (Foam) (Used after Code Date 85081100)
	Note:	270167 Washer—Throttle Shaft (Felt) (Used before Code Date 85081200)
634A	270382	Washer—Foam
635	66538	Elbow—Spark Plug
642	223306	Cover—Air Cleaner
643	280374	Cup—Air Cleaner
645	23513	Bushing—Plunger Used on Type Nos. below 8500.
665	298858	Oil Minder
676	393760	Deflector—Muffler
676A	397931	Deflector—Muffler
681	299060	Needle Valve Kit
687	390690	Slide—Friction Control
688	221766	Cap—Friction Spring
689	260847	Spring—Friction
690	92484	Screw—Machine, Fil. Hd.—10-32 x 1/2"
741	261533	Gear—Timing (For Plain Bearing)
	Note:	261721 Gear—Timing (For Ball Bearing)
851	221798	Terminal—Ignition Cable
852	396397	Cleaner Assy.—Air
854	392884	Bracket Assy.—Stop Switch
864	492232	Adapter Assembly—Muffler
869	211172	Seat—Intake Valve (Standard) (Used After Code Date 88073100.)
	Note:	210879 Seat—Intake Valve (Used Before Code Date 88080100.)
	Note:	For Options see Repair Manual.
870	211291	Seat—Exhaust Valve (Standard)
	Note:	For Options see Repair Manual.
871	231348	Guide—Exhaust Valve
	Note:	63709 Guide—Intake Valve (Brass)
883	270774	Gasket—Muffler
883A	272203	Gasket—Muffler
897	394970	Trigger Coil
916	280321	Rack—Gear
949	396579	Guard—Rewind Starter
951	223286	Lever—Choke
987	398970	Seal—Throttle Shaft (Used after Code Date 85081100)
994	398067	Arrester—Spark
1016	490817	Spacer
1019	491069	Decal (Label) Kit

K&T Saw Shop 606-678-9623 or 606-561-4983

www.mymowerparts.com

K&T Saw Shop 606-678-9623 or 606-561-4983