For Arctic Cat Discount Parts Call 606-678-9623 or 606-561-4983

SECTION 4 - FUEL/LUBRICATION/COOLING

4

TABLE OF CONTENTS

Carburetor Specifications 4-2
Carburetor Schematics 4-2
Carburetor 4-4
Cleaning and Inspecting Carburetor 4-8
Throttle Cable Free-Play 4-9
Engine RPM (Idle) 4-9
Gas Tank 4-10
Gas Tank Valve 4-11
Gas/Vent Hoses 4-11
Oil Flow Charts 4-12
Oil Filter/Oil Pump 4-13
Testing Oil Pump Pressure 4-14
Oil Cooler (250/300/400) 4-15
Liquid Cooling System (500) 4-16
Radiator 4-17
Hoses/Thermostat 4-18
Fan 4-19
Servicing Water Pump (500 - Manual Transmission) 4-19
Servicing Water Pump (500 - Automatic Transmission) 4-20

Back to Table of Contents

www.mymowerparts.com

For Arctic Cat Discount Parts Call 606-678-9623 or 606-561-4983

Carburetor Specifications

ITEM	250	300	400	500
Type	Keihin CVK32	Keihin CVK32	Keihin CVK32	Keihin CVK36
Main Jet	138	135	150	148
Slow Jet	38	38	38	75
Low Speed Fuel Screw Setting (turns)	1 3/4	2 1/4	2 1/8	1 7/8
Needle Jet	4.0/3.4	4.0/3.4	4.0/3.4	6.0/4.0
Jet Needle	N8TT	N8TT	N8TV	N3RS
Idle RPM	1300-1400	1300-1400	1250-1350	1250-1350
Starter Jet	60	65	60	90
Float Arm Height	17 mm (0.7 in.)	17 mm (0.7 in.)	17 mm (0.7 in.)	17 mm (0.7 in.)
Throttle Cable Free-Play (at lever)	3-6 mm (1/8-1/4 in.)	3-6 mm (1/8-1/4 in.)	3-6 mm (1/8-1/4 in.)	3-6 mm (1/8-1/4 in.)

Carburetor Schematics

250/300 (Keihin)

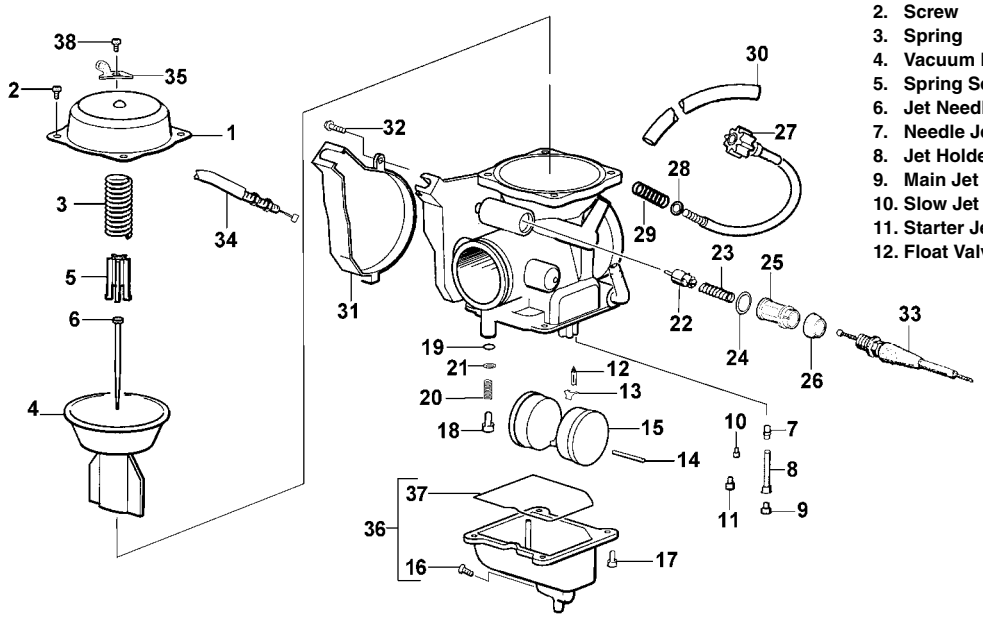

KEY
1. Cover
2. Screw
3. Spring
4. Vacuum Piston
5. Spring Seat
6. Jet Needle
7. Needle Jet
8. Jet Holder
9. Main Jet
10. Slow Jet
11. Starter Jet
12. Float Valve
13. Clip
14. Float Pin
15. Float
16. Drain Plug
17. Screw
18. Low Speed Fuel Screw
19. O-Ring
20. Spring
21. Washer
22. Starter Valve
23. Spring
24. O-Ring
25. Cap
26. Rubber Cap
27. Stop Screw
28. Washer
29. Spring
30. Tube
31. Cover
32. Screw
33. Choke Cable
34. Throttle Cable
35. Idle Adjust Bracket
36. Float Chamber Assy
37. O-Ring
38. Screw

0735-876

Back to Table of Contents
Back to Section Table of Contents

www.mymowerparts.com

For Arctic Cat Discount Parts Call 606-678-9623 or 606-561-4983

400 (Keihin)

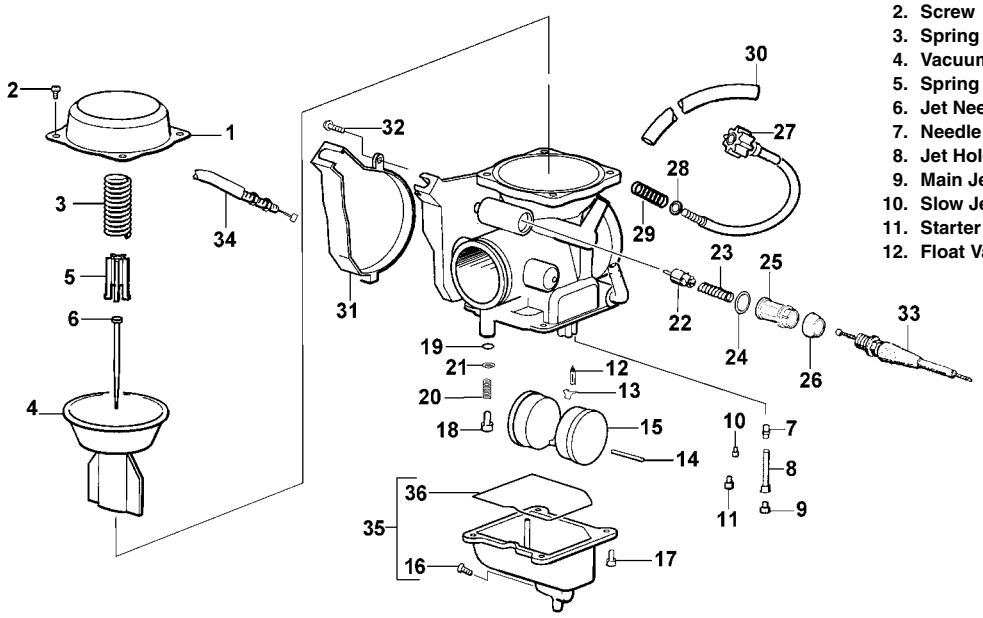

KEY

1. Cover
2. Screw
3. Spring
4. Vacuum Piston
5. Spring Seat
6. Jet Needle
7. Needle Jet
8. Jet Holder
9. Main Jet
10. Slow Jet
11. Starter Jet
12. Float Valve
13. Clip
14. Float Pin
15. Float
16. Drain Plug
17. Screw
18. Low Speed Fuel Screw
19. O-Ring
20. Spring
21. Washer
22. Starter Valve
23. Spring
24. O-Ring
25. Cap
26. Rubber Cap
27. Idle Adjust Screw
28. Washer
29. Spring
30. Tube
31. Cover
32. Screw
33. Choke Cable
34. Throttle Cable
35. Float Chamber Assy
36. O-Ring

0737-813

500 (Keihin)

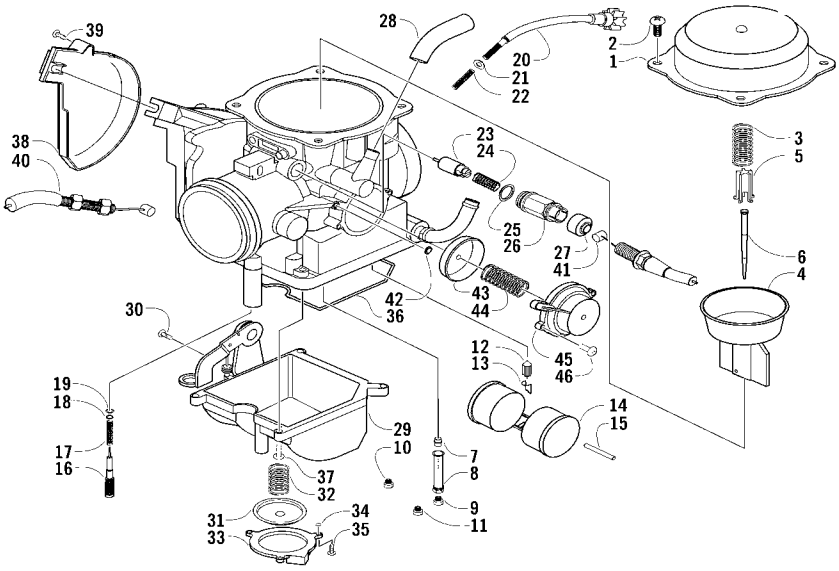

KEY

1. Cover
2. Screw
3. Spring
4. Vacuum Piston
5. Spring Seat
6. Jet Needle
7. Needle Jet
8. Jet Holder
9. Main Jet
10. Slow Jet
11. Starter Jet
12. Float Valve
13. Clip
14. Float Set
15. Float Pin
16. Low Speed Fuel Screw
17. Spring
18. Washer
19. O-Ring
20. Idle Adjust Screw
21. Washer
22. Spring
23. Starter Valve
24. Spring
25. O-Ring
26. Cap
27. Rubber Cap
28. Tube
29. Float Chamber Assy
30. Drain Plug
31. Diaphragm Assy
32. Spring
33. Pump Housing
34. U-Ring
35. Screw
36. O-Ring
37. Screw
38. Cover
39. Screw
40. Thottle Cable
41. Choke Cable
42. U-Ring
43. Diaphragm Assy
44. Spring
45. Cover
46. Screw

0737-883

4

www.mymowerparts.com

For Arctic Cat Discount Parts Call 606-678-9623 or 606-561-4983

Carburetor

⚠ WARNING

Whenever any maintenance or inspection is performed on the fuel system during which there may be fuel leakage, there should be no welding, smoking, open flames, etc., in the area.

REMOVING

1. Turn the gas tank valve to the OFF position.
2. Remove the seat.
3. Remove the air-intake snorkel (250/300) or the air cleaner housing cover (400/500).
4. Disconnect the hose from the carburetor to the gas tank at the gas tank valve connection.
5. Loosen the flange clamps; then remove the carburetor from the two carburetor boots.
6. Remove the screw securing the throttle actuator cover to the carburetor; then remove the cover.

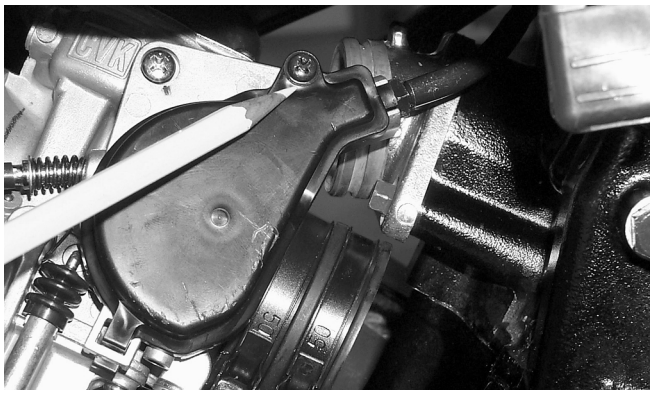

CC743

7. Remove the throttle cable from the actuator arm.

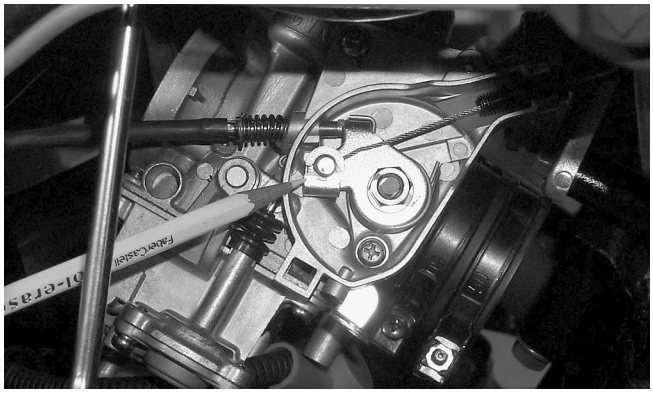

CC742

8. Loosen the outer jam nut securing the throttle cable to the carburetor body; then route the cable out of the way.

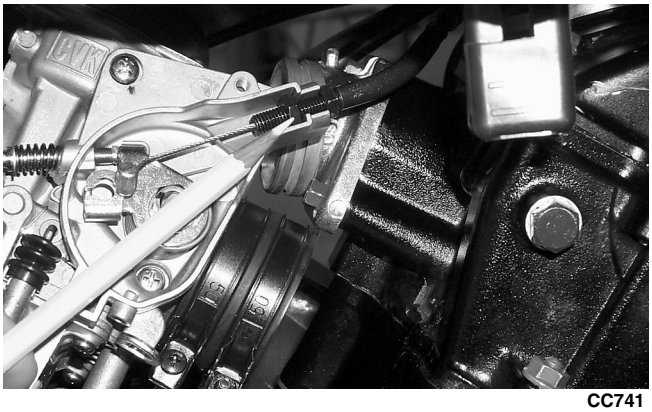

CC741

9. By unscrewing the plastic choke cable end, disconnect the choke cable from the carburetor.

CC740A

10. Disconnect the gas and vent hoses; then remove the carburetor.

DISASSEMBLING

1. Remove the four Phillips-head screws securing the top cover; then remove the cover.

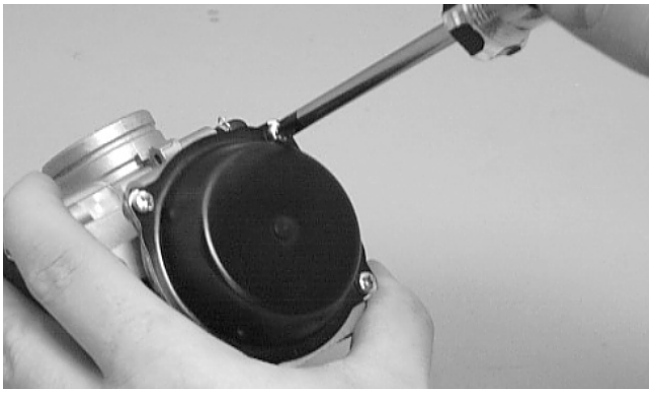

CH015D

2. Remove the vacuum piston assembly from the carburetor body. Account for a spring, spring seat, and the jet needle.

www.mymowerparts.com

Back to Table of Contents

Back to Section Table of Contents

For Arctic Cat Discount Parts Call 606-678-9623 or 606-561-4983

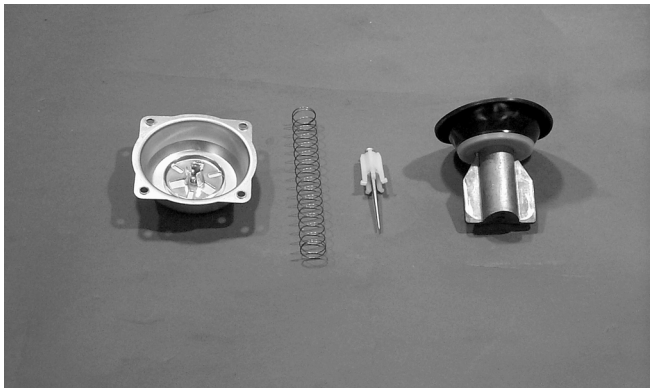

CC746

3. Remove the three screws securing the primer housing. Account for the diaphragm assembly, spring, and U-ring (in the housing).

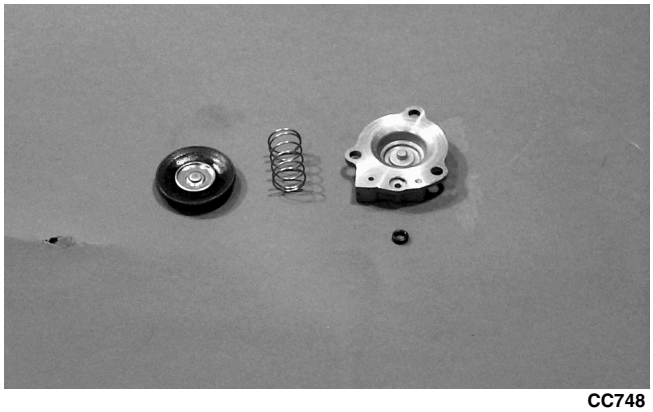

CC748

4. Remove the Phillips-head screws securing the float chamber; then remove the chamber. Account for the O-ring.

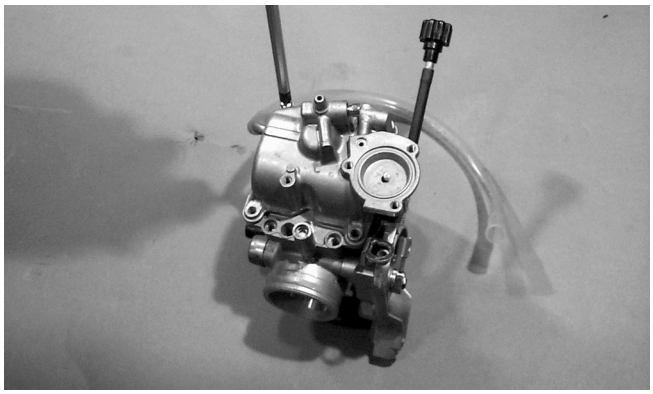

CC749

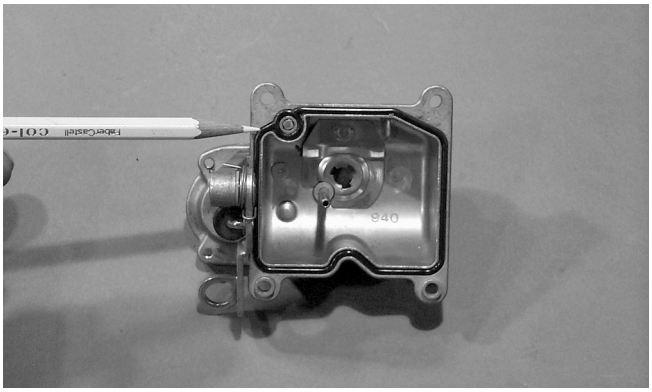

CC750

5. Remove the float pin.

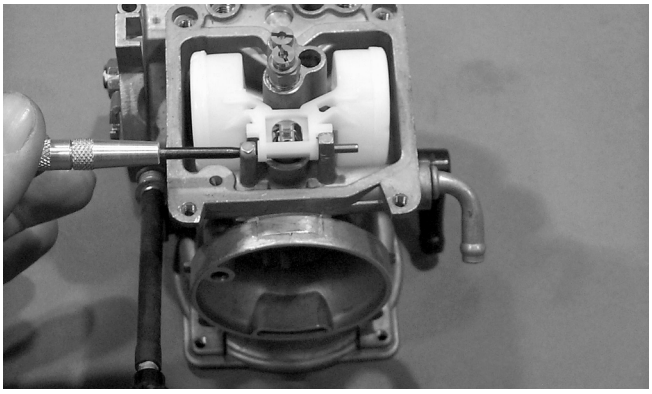

CC752

6. Lift the float assembly from the carburetor. Account for the float needle valve.

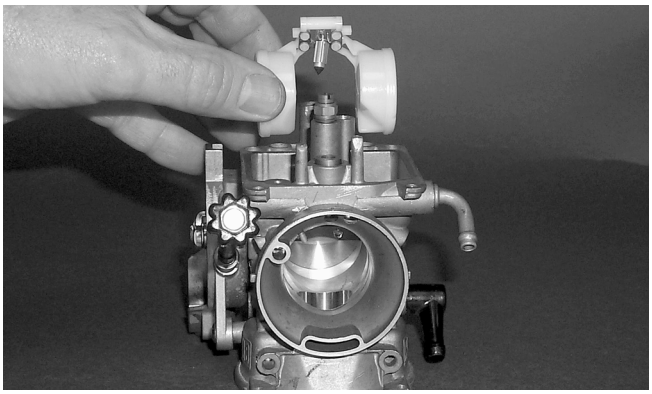

CC753

■ **NOTE: Note the locations of the jets, air screw, and holder for disassembling procedures.**

4

www.mymowerparts.com

For Arctic Cat Discount Parts Call 606-678-9623 or 606-561-4983

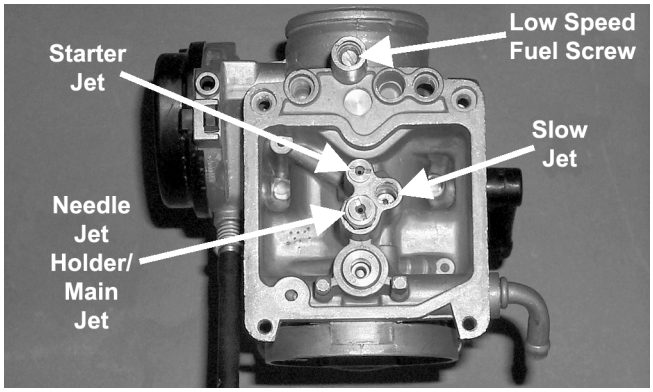

CC761A

7. Secure the needle jet holder with a wrench; then remove the main jet.

8. Remove the needle jet holder; then remove the slow jet and the starter jet.

9. Remove the low speed fuel screw.

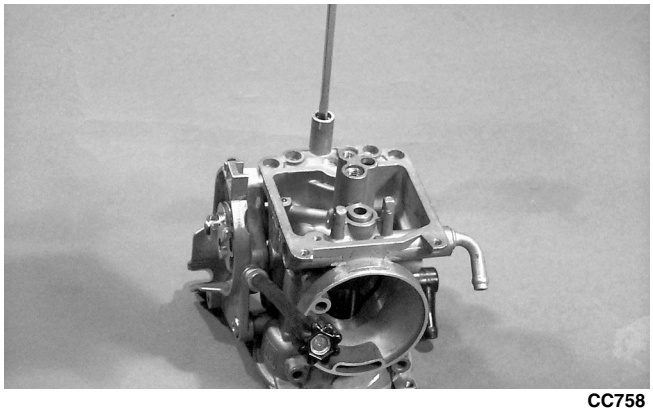

CC758

10. Unscrew and remove the idle speed adjuster assembly. Account for the spring and washer.

ASSEMBLING

1. Screw the idle speed adjuster into the carburetor making sure the washer and spring are properly positioned.

2. Install the low speed fuel screw.

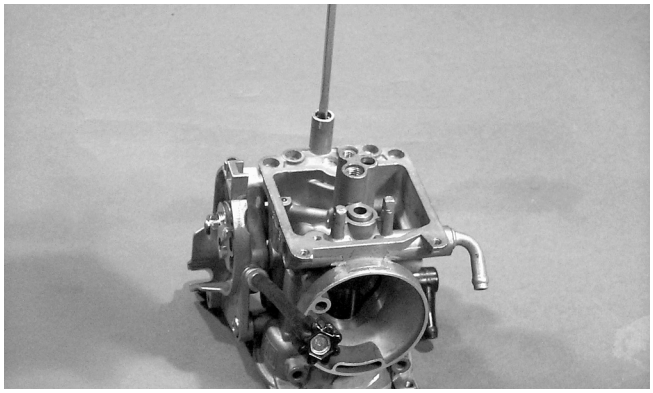

CC758

■ NOTE: Turn the low speed fuel screw clockwise until it is lightly seated; then turn it counterclockwise the recommended number of turns as an initial setting.

■ NOTE: Note the locations of the jets and holder during assembling procedures.

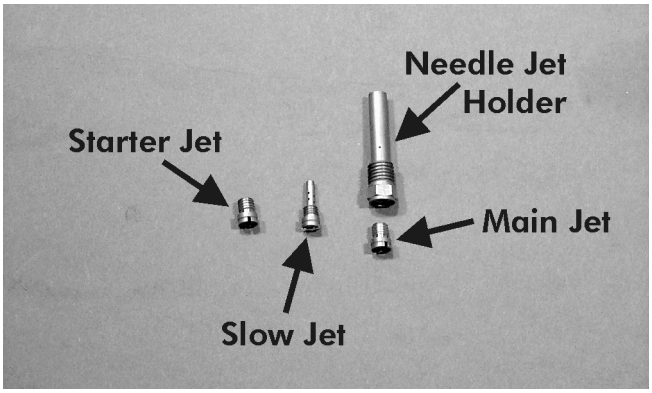

CC759A

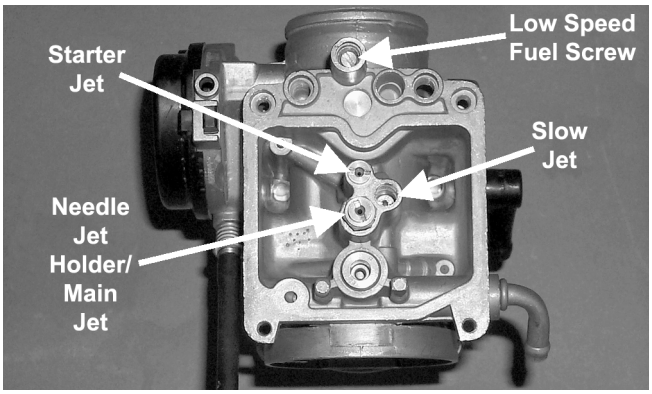

CC761A

3. Install the slow jet. Tighten securely.

4. Install the main jet into the needle jet holder and tighten securely; then install the needle jet holder assembly into the carburetor and tighten securely.

5. Place the float assembly (with float needle valve) into position and secure to the carburetor with the float pin.

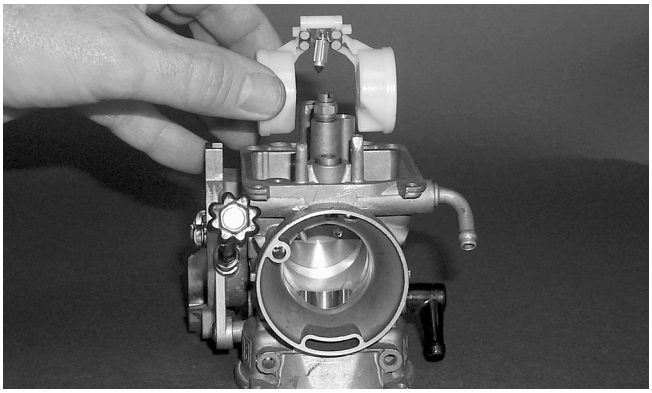

CC753

Back to Table of Contents
Back to Section Table of Contents

www.mymowerparts.com

For Arctic Cat Discount Parts Call 606-678-9623 or 606-561-4983

■ NOTE: Check float arm height by placing the carburetor on its side w/float contacting the needle; then measure with a caliper the height when the float arm is in contact with the needle valve. Float arm height should be 17 mm (0.7 in.).

6. Place the float chamber into position making sure the O-ring is properly positioned; then secure with the Phillips-head screws.

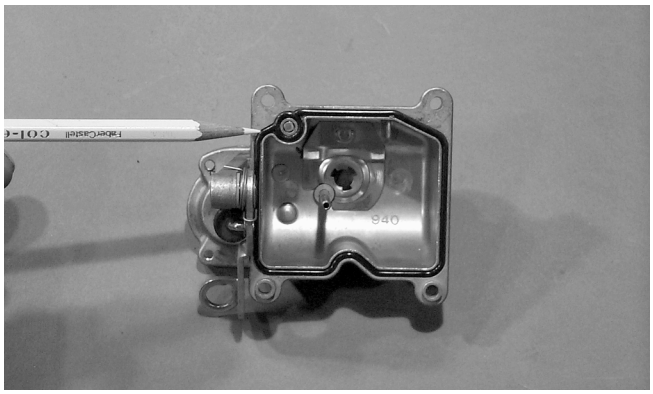

CC750

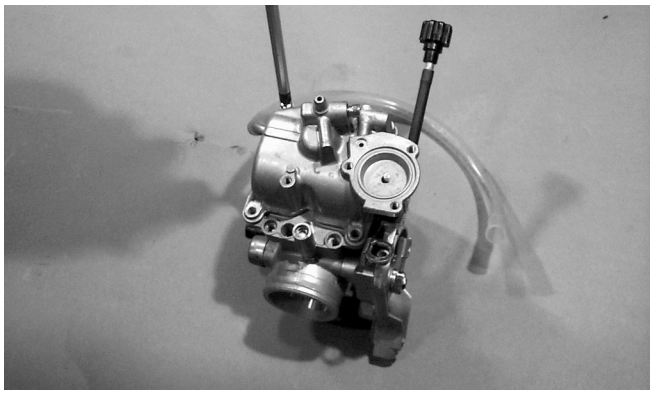

CC749

7. Place the U-ring into the primer housing. Position the spring and diaphragm assembly (lip toward the carburetor) onto the carburetor; then secure the assembly with the primer housing and three screws. Tighten securely.

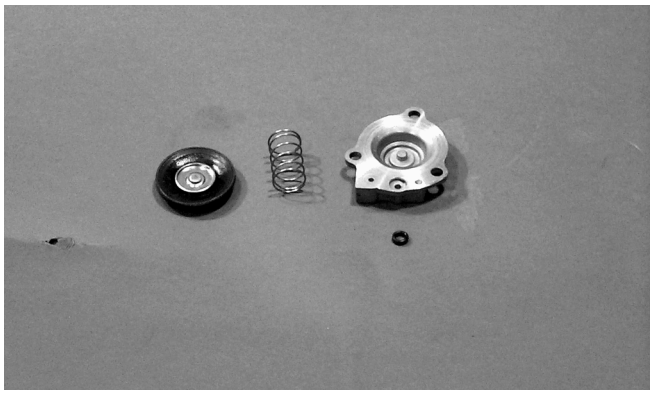

CC748

⚠ CAUTION

It is important to press down on the primer housing until it contacts the carburetor to make sure the diaphragm lip is properly seated in the groove in the carburetor. If the diaphragm is not properly seated, leakage will occur.

8. Place the jet needle, spring seat, and spring into the vacuum piston; then place the assembly down into the carburetor.

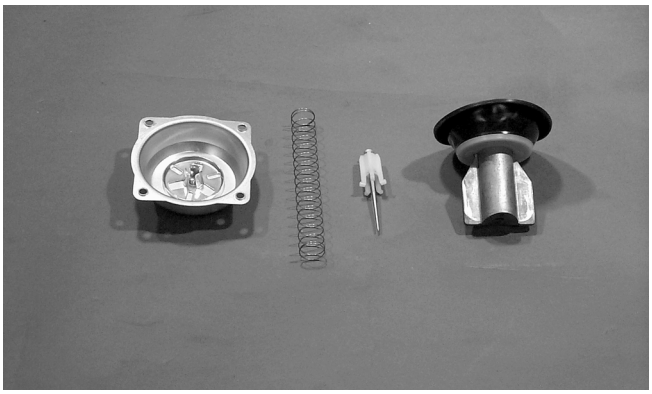

CC746

9. Place the top cover into position; then secure with the Phillips-head screws. Tighten securely.

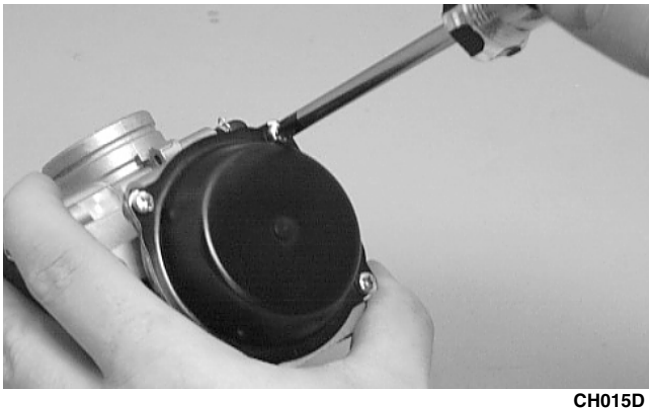

CH015D

INSTALLING

1. Connect the gas and vent hoses onto the carburetor.

2. Connect the choke cable by screwing the plastic choke cable end onto the carburetor.

www.mymowerparts.com

For Arctic Cat Discount Parts Call 606-678-9623 or 606-561-4983

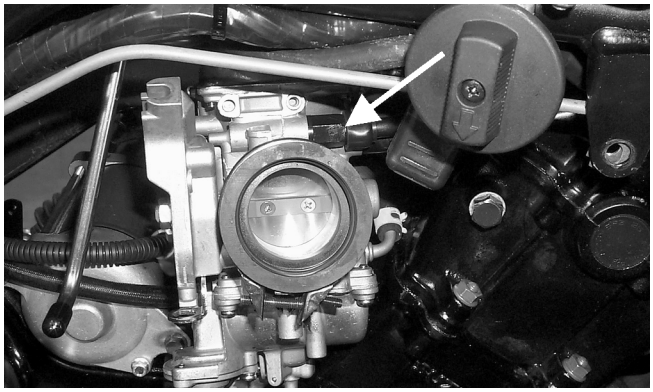

CC740A

3. Place the throttle cable into position and secure by tightening the outer jam nut.

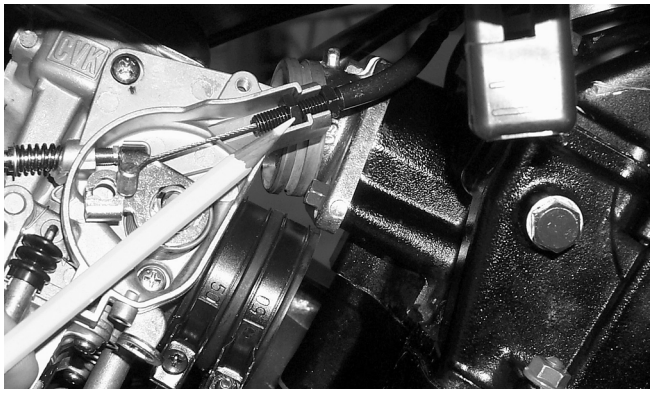

CC741

4. Connect the throttle cable to the actuator arm.

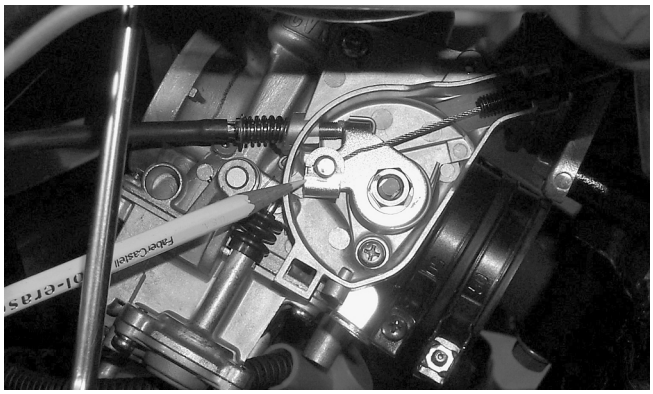

CC742

5. Place the throttle actuator cover into position on the carburetor; then secure with the screw.

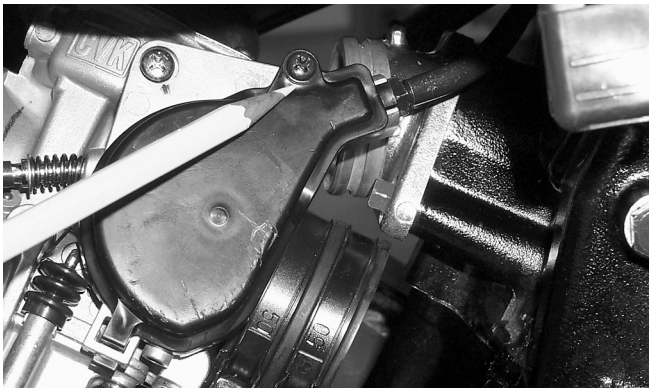

CC743

6. Position the carburetor in the air cleaner boot and intake pipe assembly; then secure with the clamps.
7. Connect the hose at the gas tank valve connection.
8. Secure the air-intake snorkel (250/300) or the air cleaner housing cover (400/500).
9. Install the seat; then turn the gas tank valve to the ON position.

Cleaning and Inspecting Carburetor

■NOTE: Whenever a part is worn excessively, cracked, or damaged in any way, replacement is necessary.

⚠ WARNING

When drying components with compressed air, always wear safety glasses.

⚠ CAUTION

DO NOT place any non-metallic components in parts-cleaning solvent because damage or deterioration will result.

1. Place all metallic components in a wire basket and submerge in carburetor cleaner.
2. Soak for 30 minutes; then rinse with fresh parts-cleaning solvent.
3. Wash all non-metallic components with soap and water. Rinse thoroughly.
4. Dry all components with compressed air only making sure all holes, orifices, and channels are unobstructed.
5. Inspect the carburetor body for cracks, nicks, stripped threads, and any other imperfections in the casting.

www.mymowerparts.com

For Arctic Cat Discount Parts Call 606-678-9623 or 606-561-4983

6. Inspect the vacuum piston/diaphragm for cracks, imperfections in the casting, or cracks and tears in the rubber.

7. Inspect float for damage.

8. Inspect gasket and O-rings for distortion, tears, or noticeable damage.

9. Inspect tips of the jet needle, low speed fuel screw, and the inlet needle valve for wear, damage, or distortion.

10. Inspect the slow jet and main jet for obstructions or damage.

■ NOTE: If the slow jet is obstructed, the mixture will be extremely lean at idle and part-throttle operation.

11. Inspect the plunger assembly/starter valve and seat for wear or damage.

12. Inspect the carburetor mounting flange for damage and tightness.

Throttle Cable Free-Play

1. Check throttle cable free-play at the lever; free-play should be 3-6 mm (1/8 - 1/4 in.).

2. To adjust, slide the rubber boot away from the adjuster located near the throttle lever. Loosen the jam nut and rotate the adjuster in the appropriate direction until proper free-play is attained. Tighten the jam nut against the adjuster; then slide the rubber boot over the adjuster.

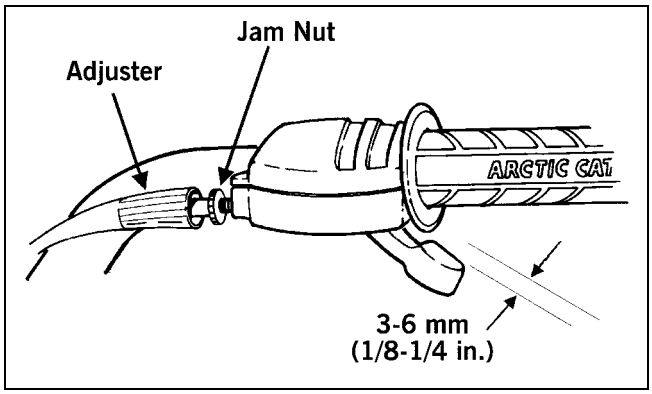

ATV-0047

Engine RPM (Idle)

To properly adjust the idle RPM, a tachometer is necessary.

To adjust idle RPM, use the following procedure.

■ NOTE: To access the idle adjustment screw, it will be necessary to remove the seat on the 250/300 models. The idle adjustment screw is located on the right-hand side of the carburetor on the 400/500 models.

1. Start the engine and warm it up to operating temperature.

2. Turn the idle adjustment screw clockwise or counterclockwise until the engine idles at recommended RPM.

⚠ WARNING

Adjust the idle to the correct RPM. Make sure the engine is fully warm before adjusting the idle RPM.

Engine Idle RPM	
250/300	1300-1400
400/500	1250-1350

CC795B

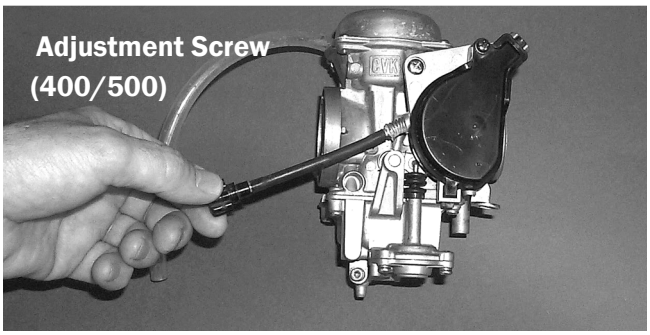

AF920C

4

www.mymowerparts.com

For Arctic Cat Discount Parts Call 606-678-9623 or 606-561-4983

3. Inspect gas tank valve, tank cap, and tank for leaks, holes, and damaged threads.

4. Inspect the gas gauge for proper operation.

INSTALLING

1. Place the gas tank into position on the frame; then install the torx-head screws. Tighten securely.

2. Connect the fuel hose from the carburetor; then secure hose to cables and hoses with a cable tie.

3. Install the air-intake snorkel (250/300) or the air cleaner housing cover (400/500).

4. Install the vent hose; then fill the gas tank with gasoline.

5. Turn the gas tank valve to the ON position and inspect for leakage.

6. Install the seat.

Gas Tank Valve

The ATV has a valve incorporated into the gas tank. There are three positions: ON, RES, and OFF.

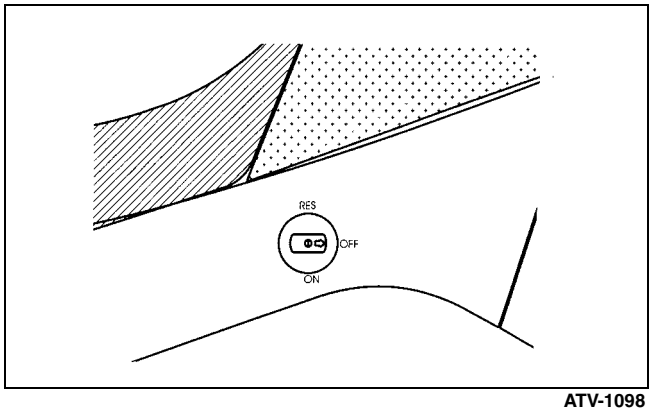

ATV-1098

In the OFF position, the valve will not allow gasoline to flow to the carburetor. In the ON position (the normal operating position), gasoline will flow from the tank to the carburetor. In this position 2.46 l (0.65 U.S. gal.) will remain in the tank as a reserve quantity. Moving the valve to the RES position will allow the operator to use the remaining gasoline in the tank. When turning the valve to any of the three positions, be sure the indicator is pointed directly at the position desired.

REMOVING/INSPECTING

⚠ WARNING

Drain the gas tank prior to this procedure.

1. Remove the gas hose from the valve by releasing the spring clamp.

2. Remove the two nuts securing the valve; then remove the valve. Account for the gasket.

3. Inspect the gasket and valve/tank mating surfaces for damage or deterioration.

4. Inspect for and remove any obstructions in the valve.

INSTALLING

1. Place the valve and gasket into position on the tank and secure with the nuts. Tighten to 0.1 kg-m (1 ft-lb).

2. Install the gas hose onto the valve with the spring clamp.

Gas/Vent Hoses

Replace the gas hose every two years. Damage from aging may not always be visible. Do not bend or obstruct the routing of the carburetor vent hose. Make certain that the vent hose is securely connected to the carburetor and the opposite end is always open.

www.mymowerparts.com

For Arctic Cat Discount Parts Call 606-678-9623 or 606-561-4983

Oil Flow Charts

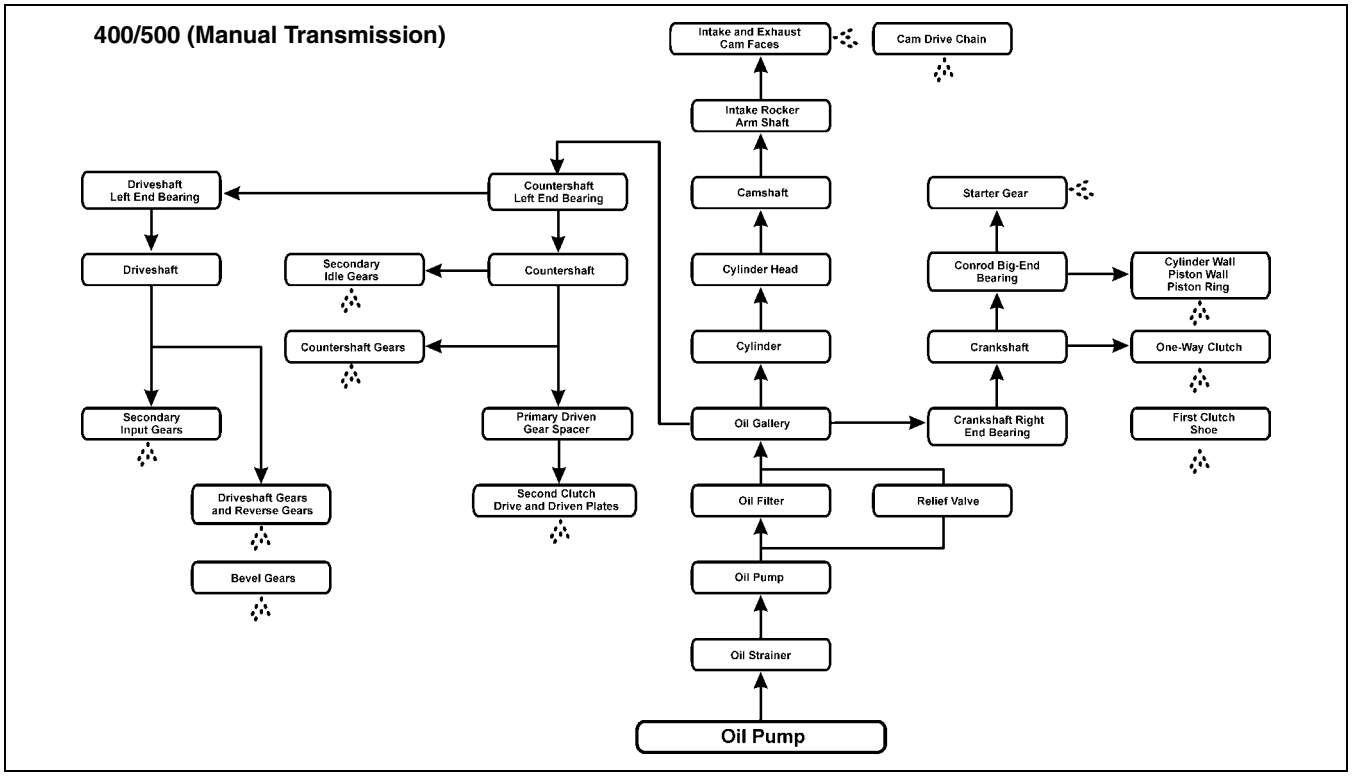

ATV-0111

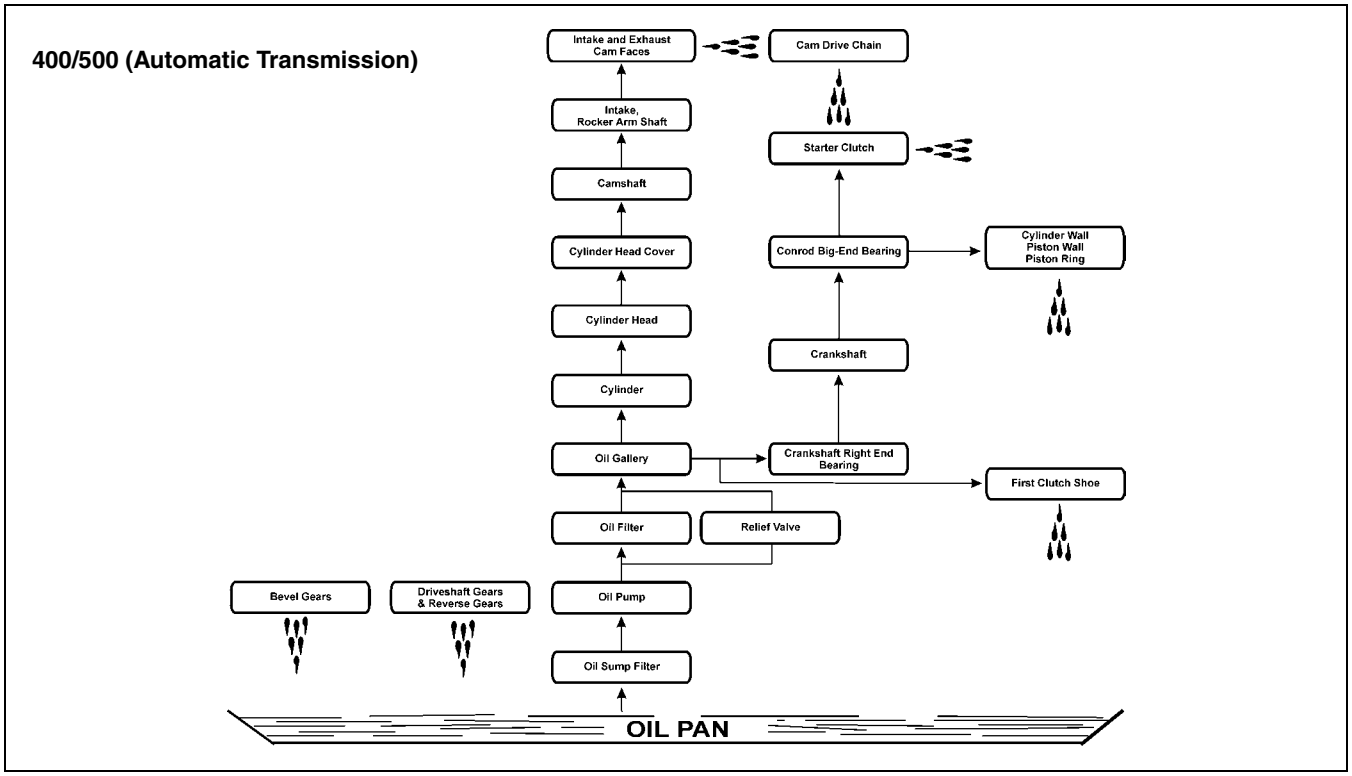

ATV-1102

Back to Table of Contents
Back to Section Table of Contents

www.mymowerparts.com

For Arctic Cat Discount Parts Call 606-678-9623 or 606-561-4983

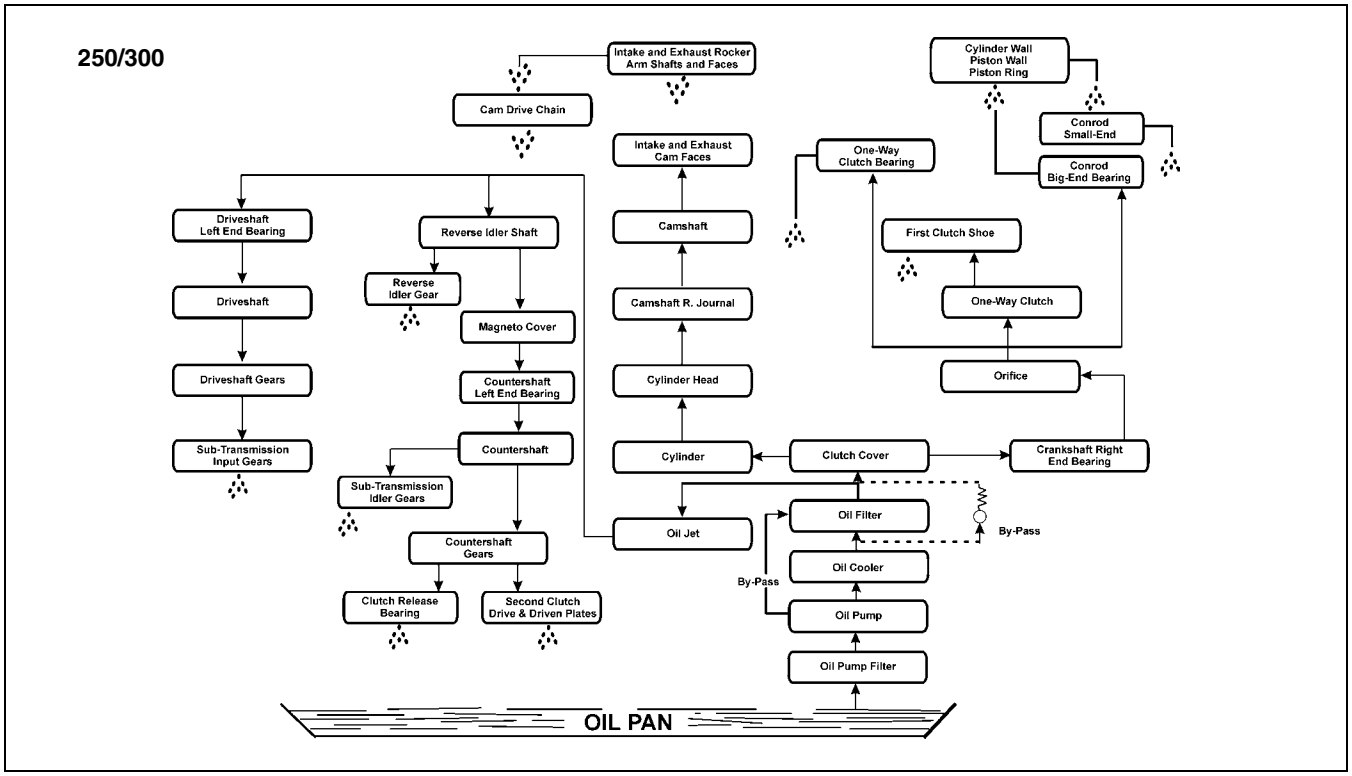

ATV-0106

4

Oil Filter/Oil Pump

■ **NOTE: Whenever internal engine components wear excessively or break and whenever oil is contaminated, the oil pump should be disassembled, cleaned and inspected, and serviced as necessary.**

250/300

KEY
1. Engine Oil Pump
2. Driven Gear
3. Pin
4. Circlip
5. Cap Screw
6. Strainer
7. Cap Screw
8. Cap
9. O-Ring
10. Cap Screw
11. Drain Plug
12. Gasket
13. Filter
14. Filter O-Ring
15. Cap
16. Check Plug
17. Gasket
18. Cap O-Ring
19. Spring
20. Stud Bolt
21. Stud Bolt
22. Nut

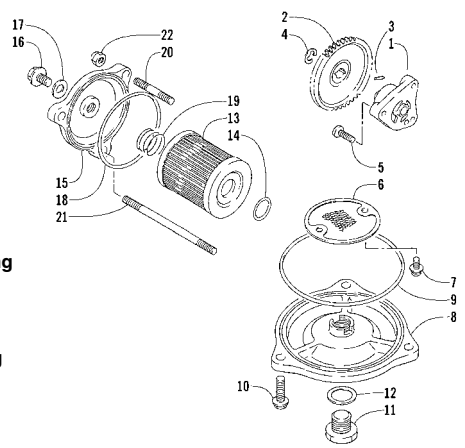

0733-752

400

KEY
1. Oil Pump
2. Driven Gear
3. Pin
4. Washer
5. Circlip
6. Cap Screw
7. Strainer
8. Cap Screw
9. Cap
10. O-Ring
11. Cap Screw
12. Filter
13. Drain Plug
14. Gasket
15. Oil Relief Valve Assy
16. Pin

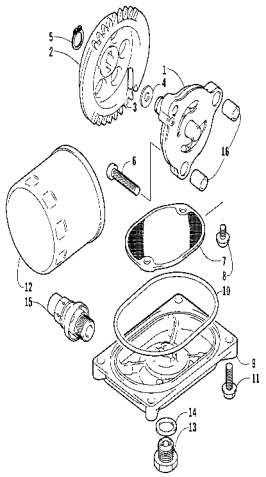

0737-035

www.mymowerparts.com

For Arctic Cat Discount Parts Call 606-678-9623 or 606-561-4983

500

KEY
1. Oil Pump
2. Drive Gear
3. Pin
4. Washer
5. Circlip
6. Cap Screw
7. Strainer
8. Cap Screw
9. Cap
10. O-Ring
11. Cap Screw
12. Filter
13. Drain Plug
14. Gasket
15. Oil Relief Valve Assy
16. Oil Filter Union

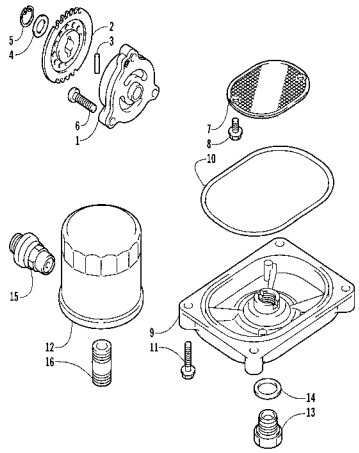

0737-765

REMOVING/DISASSEMBLING

1. Remove the oil pump from the engine (see Right-Side Components in Section 3).
2. Remove the Phillips-head screw on the back side of the pump and separate the pump housing and cover. Note the position of the inner and outer rotors and alignment pin for assembly.
3. Remove oil pump components.

CLEANING AND INSPECTING

■NOTE: Whenever a part is worn excessively, cracked, or damaged in any way, replacement is necessary.

1. Clean all oil-pump components.
2. Inspect the rotors for scoring and gouges.
3. Inspect the alignment pin for damage.
4. Inspect the pump housing and cover for cracks or damage.

ASSEMBLING/INSTALLING

1. Place the rotors into the pump housing making sure the alignment pin is in the groove of the rotor.
2. Place the cover onto the pump housing.
3. Secure the pump with the Phillips-head screw coated with red Loctite #271.
4. Install the oil pump into the engine (see Right-Side Components in Section 3).

Testing Oil Pump Pressure

■NOTE: The engine must be warmed up to operating temperature for this test.

1. Connect the Arctic Cat Engine Tachometer (p/n 0644-275) to the engine.
2. Connect the Oil Pressure Gauge (p/n 0444-039) to the oil filter drain plug.

■NOTE: Some oil seepage may occur when installing the oil pressure gauge. Wipe up oil residue with a cloth.

3. Start the engine and run at the specified RPM.
4. The oil pressure gauge must read as specified.

250/300
OIL PRESSURE @ 3000 RPM
0.7-2.8 kg/cm²
(10-40 psi)
Oil Temperature - 60°C (140°F)

400 (Manual Transmission)
OIL PRESSURE @ 3000 RPM
0.6-1.0 kg/cm²
(9-14 psi)
Oil Temperature - 60°C (140°F)

400 (Automatic Transmission)
OIL PRESSURE @ 3000 RPM
1.1-1.5 kg/cm²
(16-21 psi)
Oil Temperature - 60°C (140°F)

500 (Manual Transmission)
OIL PRESSURE @ 3000 RPM
1.2-1.6 kg/cm²
(17-23 psi)
Oil Temperature - 60°C (140°F)

500 (Automatic Transmission)
OIL PRESSURE @ 3000 RPM
1.3-1.7 kg/cm²
(18.8-24.7 psi)
Oil Temperature - 60°C (140°F)

Back to Table of Contents
Back to Section Table of Contents

www.mymowerparts.com

For Arctic Cat Discount Parts Call 606-678-9623 or 606-561-4983

Liquid Cooling System
(500)

KEY
1. Radiator Screen
2. Wire Clamp
3. Cap Screw
4. Grommet
5. Collar
6. Hose
7. Radiator Cap
8. Radiator Assy
9. Hose Clamp
10. Radiator
11. Hose Clamp
12. Coolant Hose
13. Fan Blade
14. Fan Motor
15. Machine Screw
16. Coolant Hose
17. Coolant Hose
18. Machine Screw
19. Washer
20. Fender Panel
21. Thumb Screw
22. Speed Nut
23. Nut
24. Washer
25. Stem Bushing
26. Machine Screw
27. Cable Tie
28. Fan Shroud
29. Fender Panel
30. Flange Nut

500
(Manual Transmission)

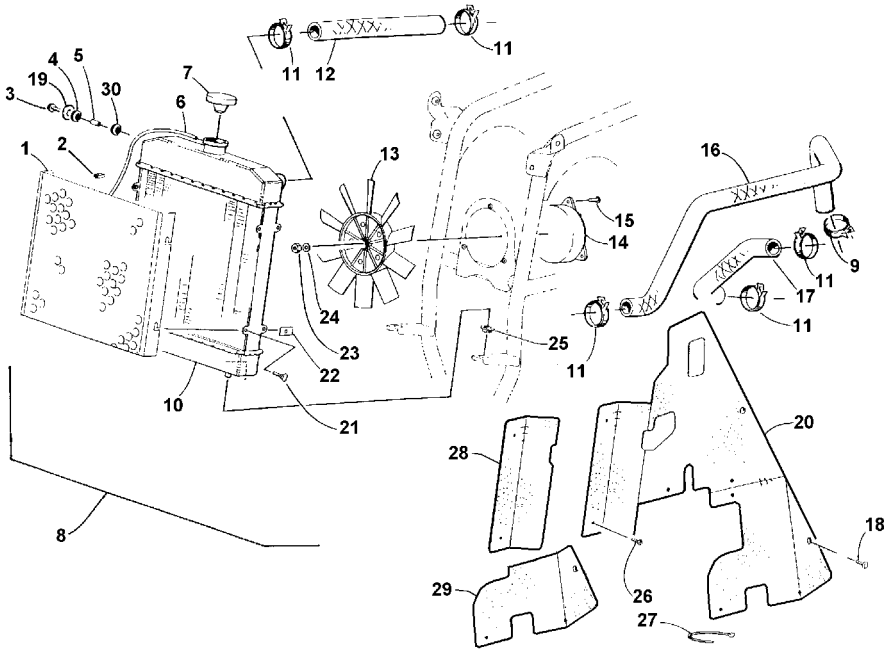

0735-912

500
(Automatic Transmission)

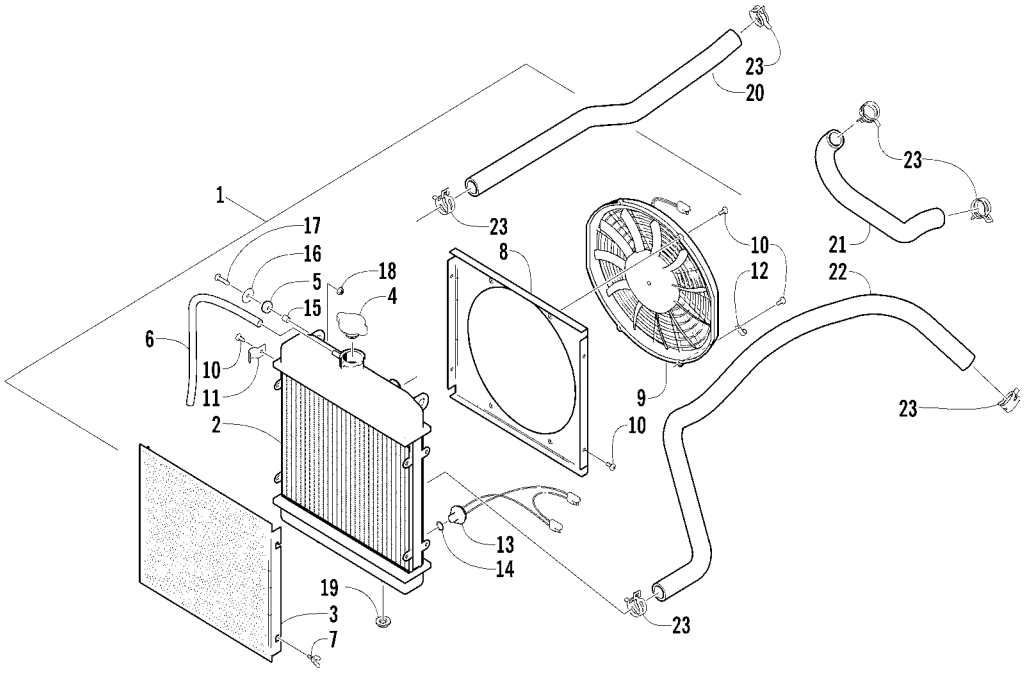

KEY
1. Radiator Assy
2. Radiator
3. Radiator Screen
4. Radiator Cap
5. Grommet
6. Vent Hose
7. Thumb Screw
8. Fan Shroud
9. Fan
10. Machine Screw
11. Clamp
12. Clamp
13. Temperature Sender
14. O-Ring
15. Collar
16. Washer
17. Cap Screw
18. Nut w/Washer
19. Stem Bushing
20. Coolant Hose
21. Coolant Hose
22. Coolant Hose
23. Hose Clamp

0737-884

Back to Table of Contents
Back to Section Table of Contents

www.mymowerparts.com

For Arctic Cat Discount Parts Call 606-678-9623 or 606-561-4983

The cooling system capacity is approximately 2.9 L (3 U.S. qt). The cooling system should be inspected daily for leakage and damage. Also, the coolant level should be checked periodically.

When filling the cooling system, use premixed Arctic Cat Antifreeze (p/n 0638-395). While the cooling system is being filled, air pockets may develop; therefore, run the engine for five minutes after the initial fill, shut the engine off, and then fill the cooling system to the bottom of the stand pipe in the radiator neck.

AN604D

⚠ CAUTION

After operating the ATV for the initial 5-10 minutes, stop the engine, allow the engine to cool down, and check the coolant level. Add coolant as necessary.

Coolant Temperature Switch	
OFF to ON	115° C (239° F) - Approx
ON to OFF	108° C (226° F) - Approx

Radiator

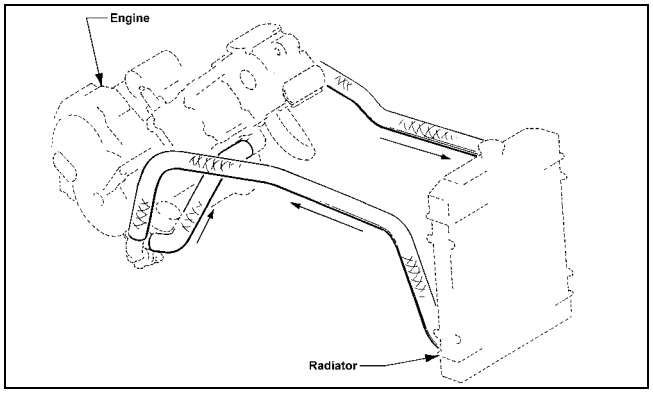

0732-411

REMOVING

1. Drain the coolant at the engine.
2. Remove the front rack (see Section 8).
3. Remove the front bumper and grille assembly (see Section 8).
4. Remove the upper and lower coolant hoses.
5. Remove the cap screws and nuts securing the radiator to the frame.
6. Disconnect the fan wiring from the main wiring harness; then remove the radiator/fan assembly and account for the grommets and collars.
7. Remove the fan/fan shroud assembly from the radiator.

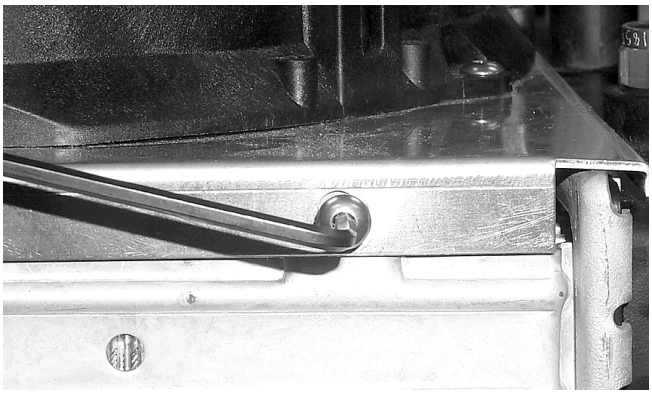

CC863

CLEANING AND INSPECTING

■ NOTE: Whenever a part is worn excessively, cracked, or damaged in any way, replacement is necessary.

1. Flush the radiator with water to remove any contaminants.
2. Inspect the radiator for leaks and damage.
3. Inspect all hoses for cracks and deterioration.
4. Inspect all fasteners and grommets for damage or wear.

INSTALLING

1. Position the fan/fan shroud assembly on the radiator; then secure with existing hardware.
2. Place the radiator with grommets and collars into position on the frame; then install the cap screws and nuts. Tighten securely.
3. Install the upper and lower coolant hoses; then secure with hose clamps.

www.mymowerparts.com

For Arctic Cat Discount Parts Call 606-678-9623 or 606-561-4983

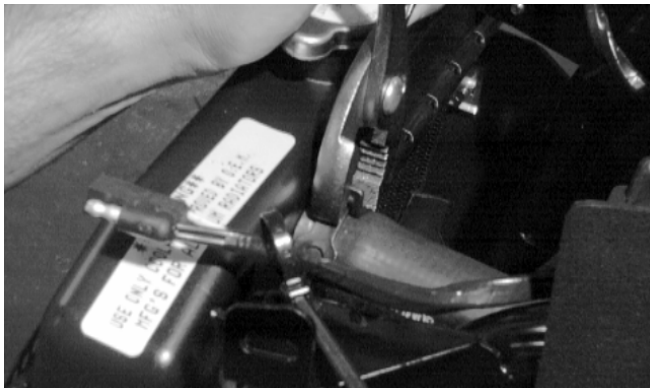

AF734D

4. Install the front bumper and grille assembly (see Section 8).
5. Install the front rack (see Section 8).
6. Fill the cooling system (2.9 L or 3 U.S. qt) with antifreeze. Check for leakage.
7. Connect the fan wiring to the main wiring harness.

Hoses/Thermostat

REMOVING

1. Drain the coolant from the cooling system.
2. Remove the hose clamps securing the lower coolant hose to the water pump housing and to the radiator; then remove the lower hose.

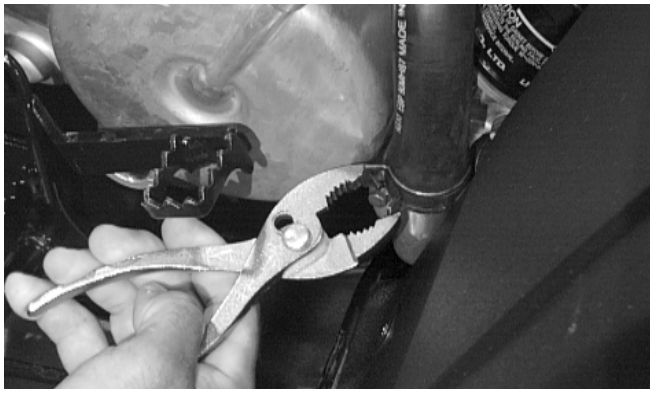

CC334D

3. Remove the clamps securing the upper coolant hose to the thermostat housing and to the radiator; then remove the upper hose.

CC335D

4. Remove the clamps securing the crossover coolant hose to the water pump and to the engine water inlet.
5. Remove the two cap screws securing the thermostat housing to the cylinder head. Account for an O-ring and a thermostat.

INSPECTING

■ NOTE: Whenever a part is worn excessively, cracked, or damaged in any way, replacement is necessary.

1. Inspect the thermostat for corrosion, wear, or spring damage.
2. Using the following procedure, inspect the thermostat for proper operation.
   A. Suspend the thermostat in a container filled with water.
   B. Heat the water and monitor the temperature with a thermometer.
   C. The thermostat should start to open at 48.5-51.5°C (119.3-124°F).
   D. If the thermostat does not open, it must be replaced.
3. Inspect all coolant hoses, connections, and clamps for deterioration, cracks, and wear.

■ NOTE: All coolant hoses and clamps should be replaced every four years or 4000 miles.

INSTALLING

1. Place the thermostat and O-ring into the thermostat housing; then secure the thermostat housing to the cylinder head with the two cap screws.
2. Install the crossover coolant hose onto the water pump and engine water inlet. Secure with the two hose clamps.
3. Slide the upper hose onto the thermostat housing and radiator. Secure with the two hose clamps.

Back to Table of Contents
Back to Section Table of Contents

www.mymowerparts.com

For Arctic Cat Discount Parts Call 606-678-9623 or 606-561-4983

ASSEMBLING/INSTALLING

■ NOTE: Treat seals and O-rings with clean anti-freeze for initial lubrication.

1. Press the mechanical seal with pump drive seal into the impeller by hand.
2. Install the mechanical seal assembly onto the water pump shaft and secure with the cap screw, washer, and gasket. Tighten the cap screw securely.
3. Place the water pump case into position and secure with the three cap screws. Note the position of the long cap screw from removal.
4. Fill the cooling system (2.9 l or 3 U.S. qt) with antifreeze.

■ NOTE: While the cooling system is being filled, air pockets may develop; therefore, run the engine for five minutes after the initial fill, shut the engine off, and then fill the cooling system.

5. Check the entire cooling system for leakage.

Servicing Water Pump
(500 - Automatic Transmission)

■ NOTE: When servicing the water pump, it will be necessary to install a new Oil Seal (p/n 3402-465) and a new Mechanical Seal (p/n 3005-909).

KEY
1. Water Pump Assy
2. Cap Screw (Drain)
3. Gasket
4. O-Ring
5. Impeller/Shaft
6. Mechanical Seal
7. Oil Seal
8. Bearing
9. E-Ring
10. O-Ring
11. Screw
12. Cap Screw

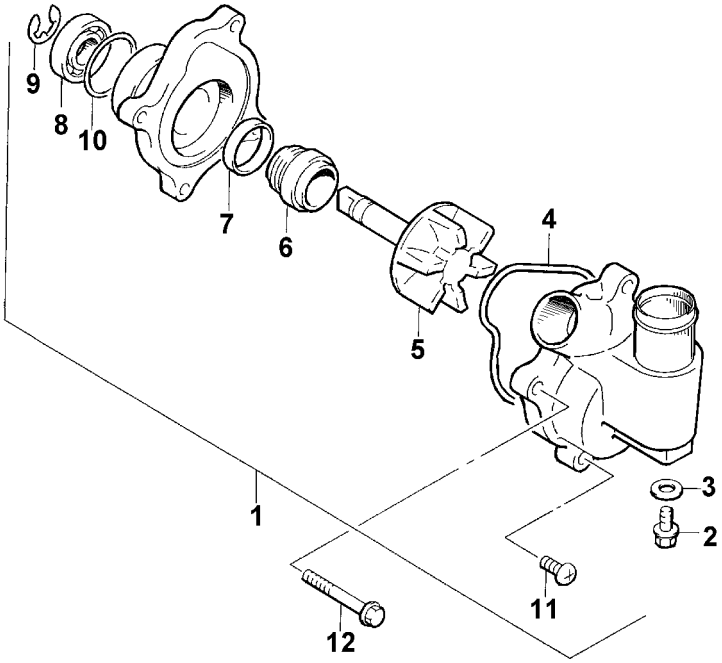

735-616A

Back to Table of Contents
Back to Section Table of Contents

www.mymowerparts.com

For Arctic Cat Discount Parts Call 606-678-9623 or 606-561-4983

REMOVING

1. Remove the radiator cap; then remove the water pump drain and drain the coolant.

CC789

2. Drain the oil from the engine/transmission.

3. Remove the four torx-head cap screws securing the front and rear fenders to the footrest; then remove the four cap screws securing the footrest to the frame. Remove the footrest.

4. From inside the left-front wheel-well, remove the two torx-head cap screws securing the fender to the frame.

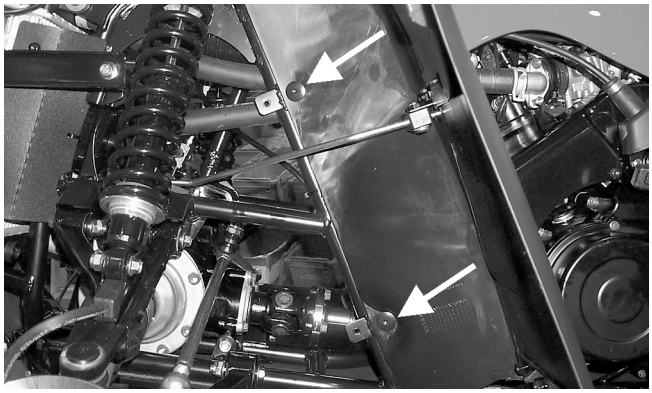

CC788A

5. Compress the tabs on the coolant hose clamps and slide the clamps away from the hose ends approximately 51 mm (2 in.); then remove both hoses from the water pump.

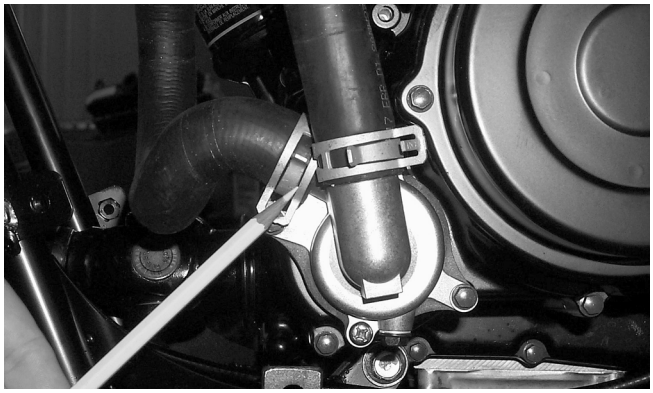

CC784

6. Using an impact driver, loosen but do not remove the two Phillips-head cover screws.

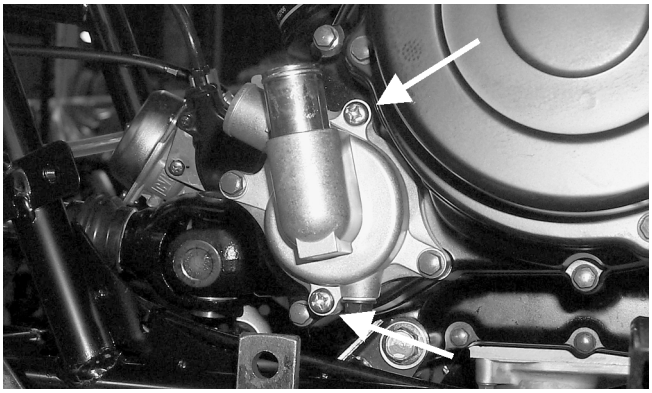

CC785A

7. Remove the two cap screws securing the water pump to the engine; then remove the water pump.

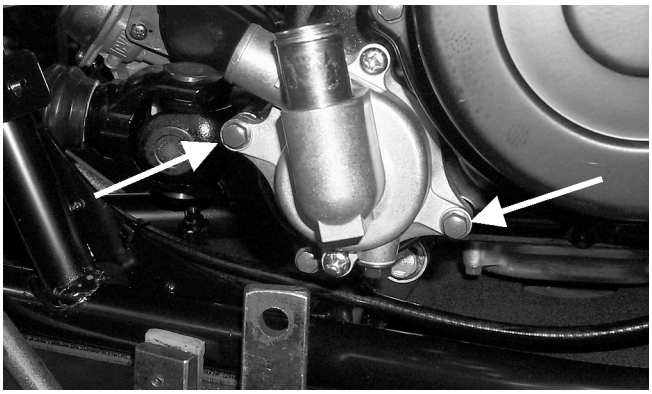

CC786A

DISASSEMBLING

1. Finish removing the two Phillips-head cap screws securing the cover to the bearing housing; then remove the cover. Account for the O-ring.

2. Remove the E-ring securing the impeller/shaft to the bearing housing; then remove the impeller/shaft.

CC781

3. Using Seal Removal Tool (p/n 0644-072), remove the mechanical seal and the oil seal from the bearing housing.

www.mymowerparts.com

For Arctic Cat Discount Parts Call 606-678-9623 or 606-561-4983

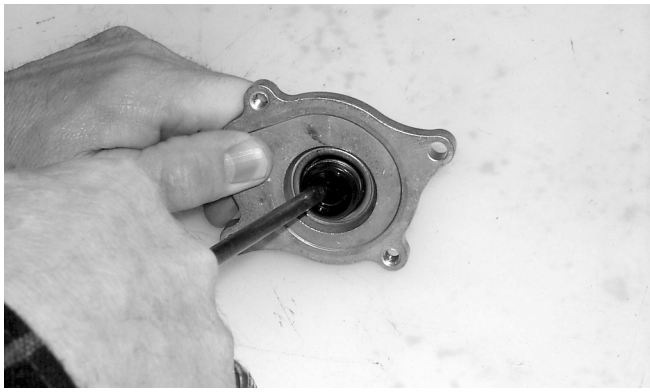

CC772

CLEANING AND INSPECTING

■ NOTE: Whenever a part is worn excessively, cracked, or damaged in any way, replacement is necessary.

1. Clean all oil-pump components in cleaning solvent.
2. Inspect the impeller/shaft for corrosion or damage.

ASSEMBLING

1. Place the new oil seal into the bearing housing; then using a seal driver, gently tap the seal down until it is fully seated.

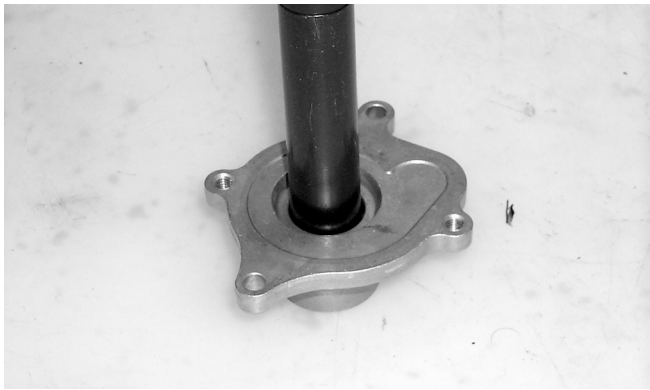

CC778

2. Place the new mechanical seal into the bearing housing; then tap it down until it is fully seated.

■ NOTE: A large deep-well socket can be used to drive the seal down evenly.

3. Install the impeller/shaft assembly into the bearing housing; then secure with the E-ring.

CC781

■ NOTE: Make sure the E-ring is fully seated and the impeller rotates freely.

4. While holding the bearing housing assembly in position on the engine, slowly rotate the impeller until the impeller/shaft engages properly with its slot in the driven shaft.

■ NOTE: The bearing housing will be flush with the engine when the two shafts are properly engaged.

⚠ CAUTION

Failure to properly engage the two shafts could cause serious engine damage.

5. With the bearing housing assembly in position on the engine, place the cover (with O-ring installed) into position on the housing; then loosely secure with the two Phillips-head cap screws.

INSTALLING

1. Secure the water pump to the engine with the two cap screws tightened securely; then tighten the two Phillips-head cap screws securely.

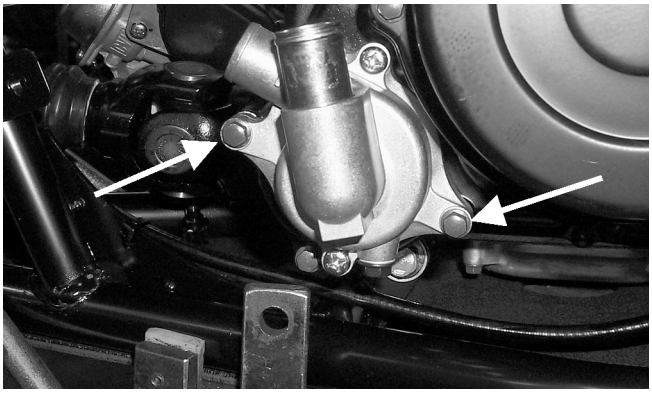

CC786A

Back to Table of Contents
Back to Section Table of Contents

www.mymowerparts.com

For Arctic Cat Discount Parts Call 606-678-9623 or 606-561-4983

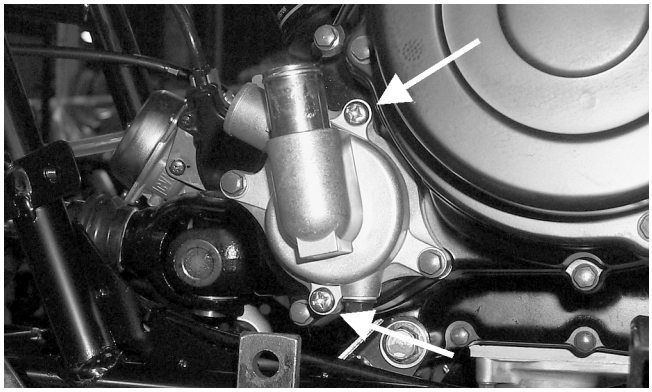

CC785A

2. Connect the two coolant hoses to the water pump and secure with the clamps.

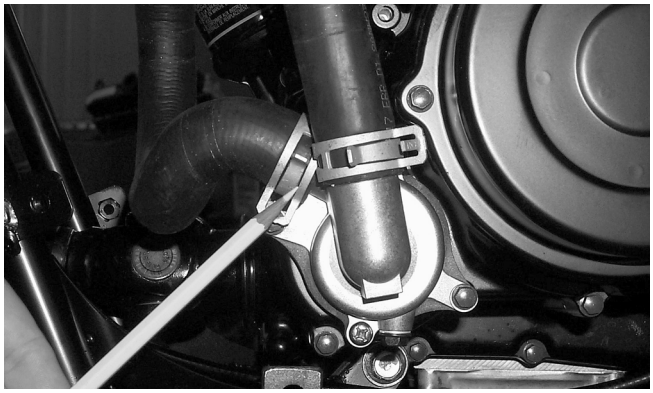

CC784

3. From inside the left-front wheel-well, secure the fender to the frame with the two torx-head cap screws. Tighten securely.

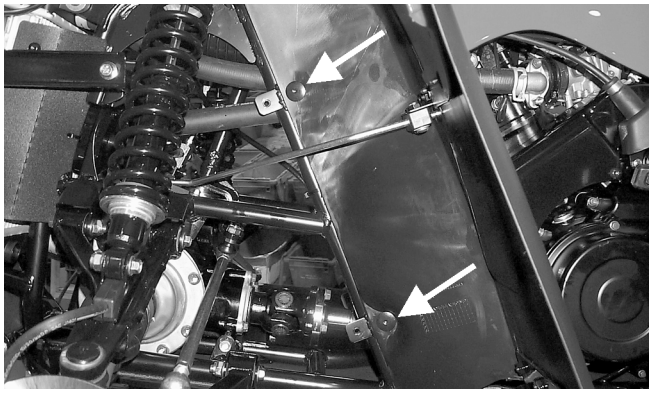

CC788A

4. Place the footrest into position on the frame and loosely secure with four cap screws; then secure the front and rear fenders to the footrest with the four torx-head cap screws. Tighten the four torx-head cap screws securely; then tighten the two 8 mm cap screws to 2.8 kg-m (20 ft-lb) and the two 10 mm cap screws to 5.5 kg-m (40 ft-lb).

5. Fill the engine/transmission with the proper amount of recommended oil.

6. Fill the cooling system with the proper amount of recommended coolant.

AN604D

■ **NOTE: While the cooling system is being filled, air pockets may develop; therefore, run the engine for five minutes after the initial fill, shut the engine off, and then fill the cooling system.**

7. Check the entire cooling system for leakage.

⚠ CAUTION

After operating the ATV for the initial 5-10 minutes, stop the engine, allow the engine to cool down, and check the coolant level. Add coolant as necessary.

4

www.mymowerparts.com

For Arctic Cat Discount Parts Call 606-678-9623 or 606-561-4983

NOTES

Back to Table of Contents

Back to Section Table of Contents

www.mymowerparts.com