For Arctic Cat Discount Parts Call 606-678-9623 or 606-561-4983

SECTION 2 - PERIODIC MAINTENANCE/TUNE-UP

TABLE OF CONTENTS

Periodic Maintenance Chart 2-2
Lubrication Points 2-3
Battery 2-3
Fuses 2-4
Air Cleaner (250/300) 2-4
Air Cleaner/Filter (400/500) 2-8
Valve/Tappet Clearance (Feeler Gauge Procedure) 2-10
Valve/Tappet Clearance (Valve Adjuster Procedure) 2-11
Testing Engine Compression 2-12
Spark Plug 2-12
Muffler/Spark Arrester 2-13
Gas/Vent Hoses 2-14
Adjusting Throttle Cable 2-14
Adjusting Engine RPM (Idle) 2-14
Engine/Transmission Oil - Filter - Strainer (250/300) 2-15
Engine/Transmission Oil - Filter - Strainer (400/500) 2-17
Front Differential/Rear Drive Lubricant 2-19
Adjusting Clutch (250/300) 2-20
Adjusting Clutch (400/500 Manual Transmission) 2-21
Tires 2-21
Steering Components 2-21
Driveshaft/Coupling 2-22
Suspension/Shock Absorbers/Bushings 2-22
Nuts/Bolts/Cap Screws 2-22
Ignition Timing 2-22
Headlight/Taillight-Brakelight 2-22
Switches 2-23
Reverse Shift Lever 2-23
Indicator Lights 2-25
Frame/Welds/Racks 2-26
Electrical Connections 2-26
Hydraulic Hand Brake System 2-26
Auxiliary Brake 2-28
Burnishing Brake Pads 2-29
Coolant (500) 2-30
Checking/Replacing V-Belt (Automatic Transmission) 2-30

Back to Table of Contents

www.mymowerparts.com

For Arctic Cat Discount Parts Call 606-678-9623 or 606-561-4983

Periodic Maintenance Chart

A = Adjust
C = Clean
D = Drain
I = Inspect
L = Lubricate
R = Replace

Item	Initial Service After Break-In (First Mo or 200 Mi)	Every Day	Every Month or Every 100 Miles	Every 3 Months or Every 300 Miles	Every 6 Months or Every 500 Miles	Every Year or Every 1500 Miles	As Needed
Battery	I		I				C
Fuses				I			R
Air Filter/Drain Tube	I	I	C*				R
Valve/Tappet Clearance	I				I		A
Engine Compression						I	
Spark Plug				I			R (4000 Mi or 18 Mo)
Muffler/Spark Arrester						C	R
Gas/Vent Hoses		I					C
Gas Tank Valve						I	C
Throttle Cable	I	I			C-L		A-R
Carb Float Chamber				D*			
Engine RPM (Idle)	I				I		A
Engine-Transmission Oil Level		I					A
Engine-Transmission Oil/Filter	R		I		R*		R
Oil Strainer	I				I		C
Front Differential/Rear Drive Lubricant	I		I	I	I	R	
Clutch	I				I		A
Tires				I			R
Steering Components	I	I		I			R
V-Belt	I				I		R
Suspension (Ball joint boots, drive axle boots front and rear, tie rods, differential and rear drive bellows)				I*			R
Nuts/Cap Screws/Screws	I			I	I		A
Ignition Timing						I	
Headlight/Taillight-Brakelight	I	I					R
Switches		I					R
Reverse Shift Lever					I		A-L
Choke Cable				I	C-L		R
Recoil Starter		I					C-R
Handlebar Grips		I					R
Handlebars		I					R
Gauges/Indicators		I					R
Frame/Welds/Racks			I		I		
Electrical Connections					I		C
Complete Brake System (Hydraulic & Auxiliary)	I	I		C			L-R
Brake Pads	I			I*			R
Brake Fluid	I			I			R (2 Yrs)
Brake Hoses	I			I			R (4 Yrs)
Coolant/Cooling System	I		I				R (2 Yrs)

* Service/Inspect more frequently when operating in adverse conditions.

Back to Table of Contents
Back to Section Table of Contents

www.mymowerparts.com

For Arctic Cat Discount Parts Call 606-678-9623 or 606-561-4983

Lubrication Points

It is advisable to lubricate certain components periodically to ensure free movement. Apply light oil to the components using the following list as reference.

A. Throttle Lever Pivot/Cable Ends

B. Brake Lever Pivot/Cable Ends

C. Auxiliary Brake Cable Ends

D. Choke Cable Upper End

E. Reverse Lever Cable End

F. Idle RPM Screw (Carburetor)

Battery

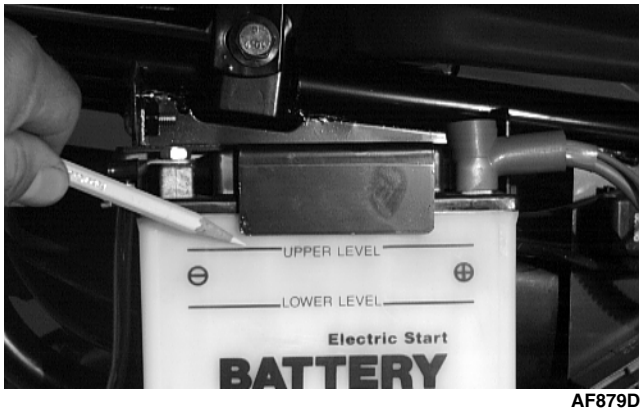

AF879D

The level of the battery fluid must be kept between the upper and lower level lines at all times. If the level drops below the lower level line, add only **distilled water** until it reaches upper level line.

⚠ WARNING

Battery acid is harmful if it contacts eyes, skin, or clothing. Care must be taken whenever handling a battery.

If the battery is discharged, remove the battery from the ATV and charge the battery at the standard charging rate of 1.4A x 10 hr.

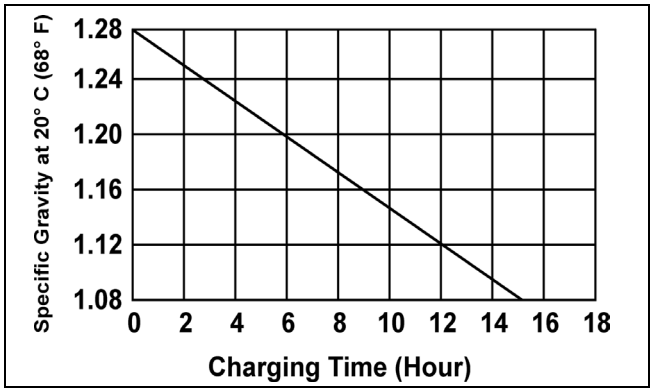

ChargTim

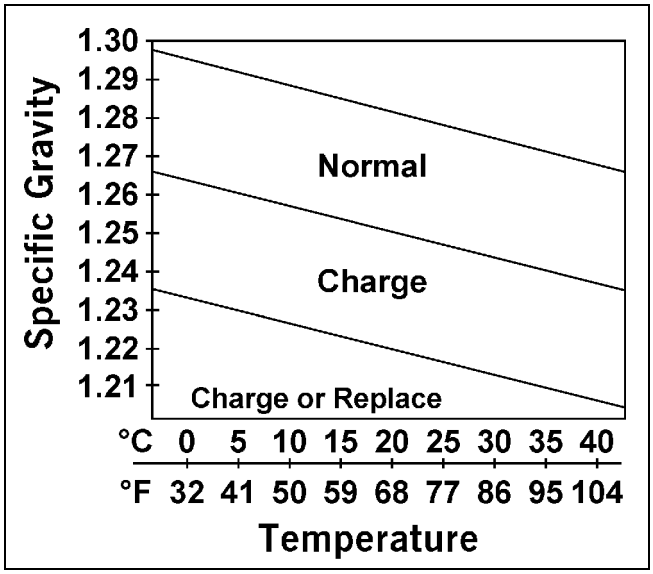

Charge

To remove and charge the battery, use the following procedure.

⚠ WARNING

Anytime service is performed on a battery, the following must be observed: keep sparks, open flame, cigarettes, or any other flame away. Always wear safety glasses. Protect skin and clothing when handling a battery. When servicing battery in enclosed space, keep the area well-ventilated. Make sure battery venting is not obstructed.

1. Remove the battery hold-down bracket.
2. Remove the negative battery cable; then remove the positive cable and the battery vent tube. Remove the battery from the ATV. Care should be taken not to damage the vent tube.

⚠ WARNING

Avoid spillage and contact with skin, eyes, and clothing.

⚠ CAUTION

Do not charge the battery while it is in the ATV with the battery terminals connected.

www.mymowerparts.com

For Arctic Cat Discount Parts Call 606-678-9623 or 606-561-4983

3. Remove the vent plugs; then (if necessary) fill the battery with **distilled water** to the upper level indicated on the battery.

4. Trickle charge the battery at 1.4 amps for 10 hours.

⚠ CAUTION

Never exceed the standard charging rate.

5. After charging, check fluid level and fill with distilled water as necessary; then install vent plugs.

⚠ CAUTION

Before installing the battery, make sure the ignition switch is in the OFF position.

6. Place the battery into position in the ATV and secure with the hold-down bracket.

7. Attach the vent tube and check the vent tube to make sure it is not crimped or obstructed in any way and that it is properly routed through and secured to the frame.

8. Connect cables to the proper terminals: positive cable to the positive terminal (+) and negative cable to the negative terminal (-). Connect the negative cable last.

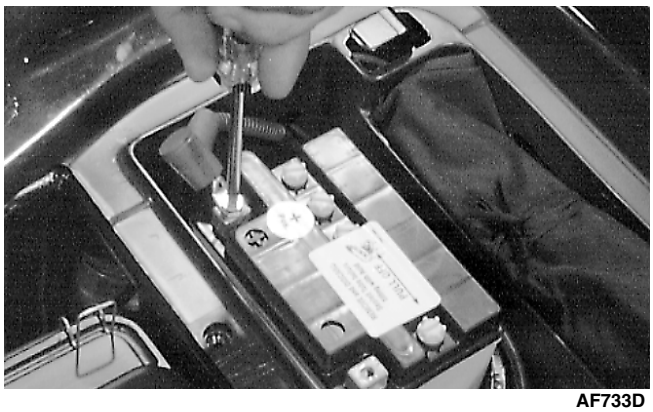

AF733D

⚠ CAUTION

Connecting cables in reverse (positive to negative and negative to positive) can cause serious damage to the electrical system.

FUSES

The main (30 Amp) fuse is located in a fuse block on the frame near the right rear tire and protected by a snap-on cover.

■ NOTE: To remove the fuse, compress the locking tabs on either side of the fuse case and lift out.

The remaining fuses are located in a fuse block under the center cover in the front fender assembly (on the 250/300) or under the seat (on the 400/500).

If there is any type of electrical system failure, always check the fuses first.

250/300	400/500
10 A IGN	10 A LIGHTS
15 A LIGHTS	10 A HIGH
10 A ACC	10 A LO
10 A SPARE	10 A IGN
	15 A FAN
	15 A ACC

⚠ CAUTION

Always replace a blown fuse with a fuse of the same type and rating.

Air Cleaner
(250/300)

The air filter inside the air cleaner must be kept clean to provide good engine power and gas mileage. If the ATV is used under normal conditions, service the filter at the intervals specified. If operated in dusty, wet, or muddy conditions, inspect and service the filter more frequently.

CLEANING AND INSPECTING FILTER

⚠ CAUTION

Failure to inspect the air filter frequently if the ATV is used in dusty, wet, or muddy conditions can damage the ATV engine.

1. Remove the seat.

2. Remove the two machine screws securing the air cleaner housing cover.

www.mymowerparts.com

For Arctic Cat Discount Parts Call 606-678-9623 or 606-561-4983

CH044D

3. Pull the retainer out and remove the filter with foam wrap.

CH045D

4. Remove the foam wrap from the filter.

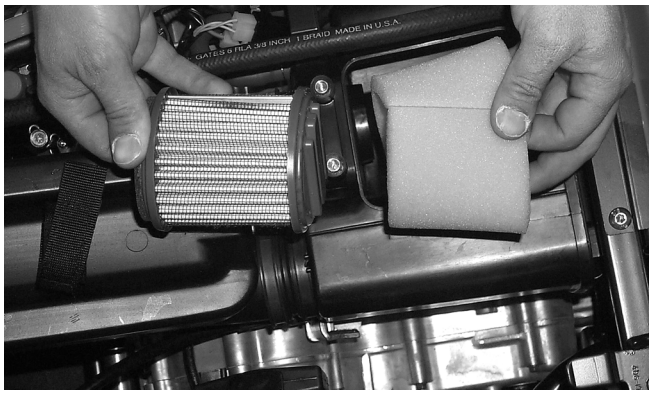

AL642D

5. Wash the polyester filter and the foam wrap with warm soapy water and rinse.

6. Allow the foam wrap to air dry thoroughly.

■ NOTE: Either allow the polyester filter to air dry or blow dry using low-pressure compressed air. Direct the compressed air through the filter from the opposite direction as normal operation air flow.

⚠ CAUTION
Do not put oil on either the filter or the foam wrap.

7. Place the foam wrap around the air filter; then install the filter with wrap into the air cleaner making sure it is properly in position and properly seated and secure with the retainer.

CH046D

CH045D

8. Install the air cleaner housing cover and secure with the machine screws; then install the seat making sure the seat is properly secured.

CH044D

9. Check the drain tube for gasoline or oil accumulation. If noticed, remove the drain tube cap from beneath the cleaner, drain the gasoline or oil into a suitable container, and install and secure the tube cap.

10. Inspect one-way drain beneath the air cleaner for debris and sealing.

www.mymowerparts.com

For Arctic Cat Discount Parts Call 606-678-9623 or 606-561-4983

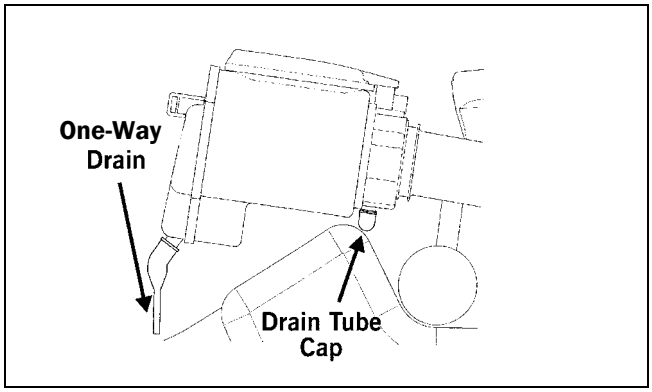

733-715B

REMOVING AIR CLEANER

1. Remove the seat; then remove the air-intake snorkel.

CH040D

CH041D

2. Remove the two machine screws securing the air cleaner housing cover.

CH044D

3. Pull the retainer out and remove the filter with foam wrap.

CH045D

4. Remove the machine screws securing the air cleaner to the frame.

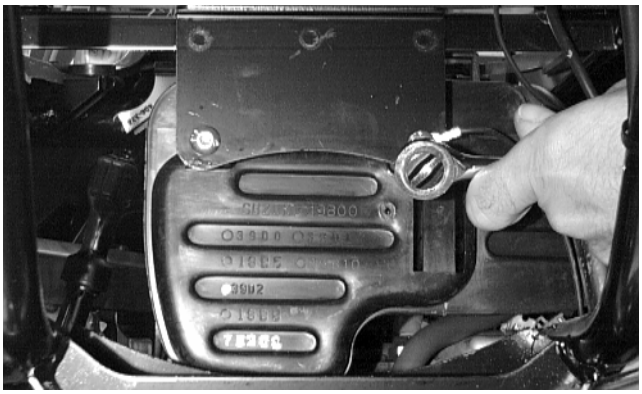

CH047D

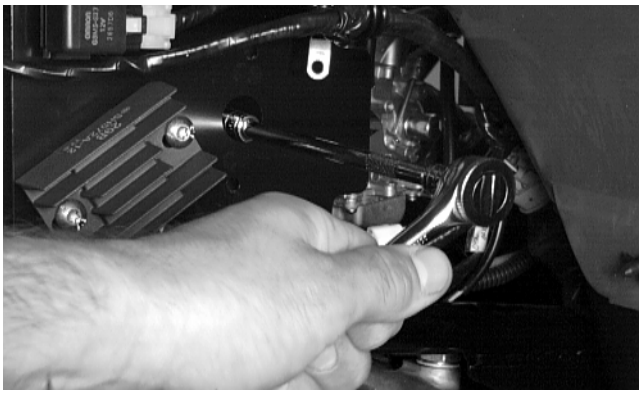

CH048D

Back to Table of Contents
Back to Section Table of Contents

www.mymowerparts.com

For Arctic Cat Discount Parts Call 606-678-9623 or 606-561-4983

4. Install the filter with foam wrap into the air cleaner; then secure with the retainer.

CH045D

5. Install the air cleaner housing cover and secure with the machine screws.

CH044D

6. Install the air-intake snorkel.

CH041D

CH040D

7. Install the seat making sure it is properly secured.

Air Cleaner/Filter
(400/500)

The air filter inside the air filter housing must be kept clean to provide good engine power and gas mileage. If the ATV is used under normal conditions, service the filter at the intervals specified. If operated in dusty, wet, or muddy conditions, inspect and service the filter more frequently. Use the following procedure to remove the filter and inspect and/or clean it.

CLEANING AND INSPECTING FILTER

⚠ CAUTION

Failure to inspect the air filter frequently if the vehicle is used in dusty, wet, or muddy conditions can damage the engine.

1. Remove the seat.
2. Remove the air filter housing cover from the retaining clips.

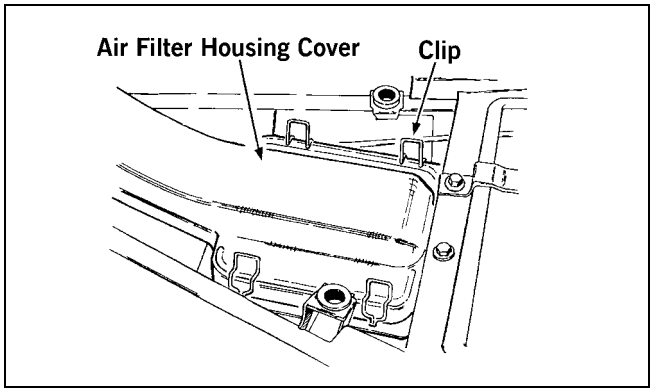

733-444A

3. Loosen the clamp; then remove the filter.

Back to Table of Contents
Back to Section Table of Contents

www.mymowerparts.com

For Arctic Cat Discount Parts Call 606-678-9623 or 606-561-4983

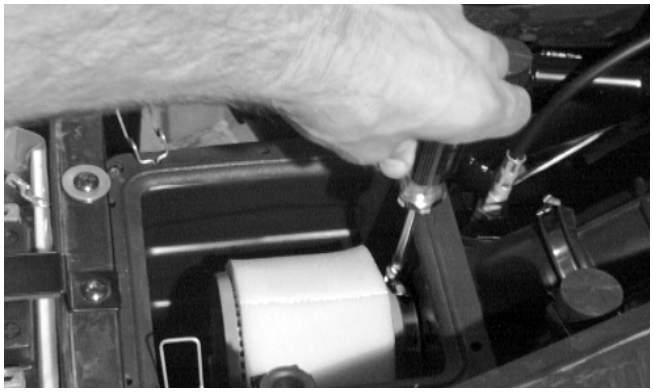

AF640DA

CH046D

4. Fill a wash pan larger than the filter with a non-flammable cleaning solvent; then dip the filter in the solvent and wash it.

■NOTE: Foam Filter Cleaner (p/n 0436-194) and Foam Filter Oil (p/n 0436-195) are available from Arctic Cat.

5. Dry the filter.

6. Put the filter in a plastic bag; then pour in air filter oil and work the filter.

⚠ CAUTION

A torn air filter can cause damage to the ATV engine. Dirt and dust may get inside the engine if the element is torn. Carefully examine the element for tears before and after cleaning it. Replace the element with a new one if it is torn.

7. Clean any dirt or debris from inside the air cleaner. Be sure no dirt enters the carburetor.

8. Place the filter in the air filter housing making sure it is properly in position and properly seated and secure with the clamp.

9. Install the air filter housing cover and secure with the retaining clips; then install the seat making sure the seat is properly secured.

CHECKING/DRAINING DRAIN TUBE

1. Periodically check the drain tube for gasoline or oil accumulation. If noticed, remove the drain tube cap from beneath the front housing, drain the gasoline or oil into a suitable container, and install and secure the tube cap.

2. Inspect one-way drain beneath the main housing for debris and for proper sealing.

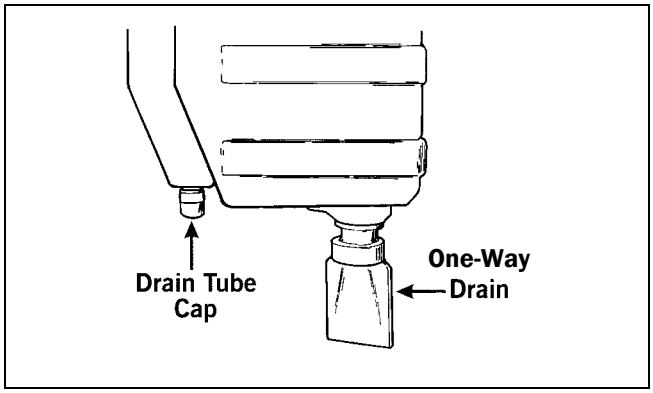

ATV-0087

REMOVING AIR CLEANER

1. Remove the seat.

2. Remove the air cleaner cover from the retaining clips.

AL645D

3. Loosen the clamp and remove the filter.

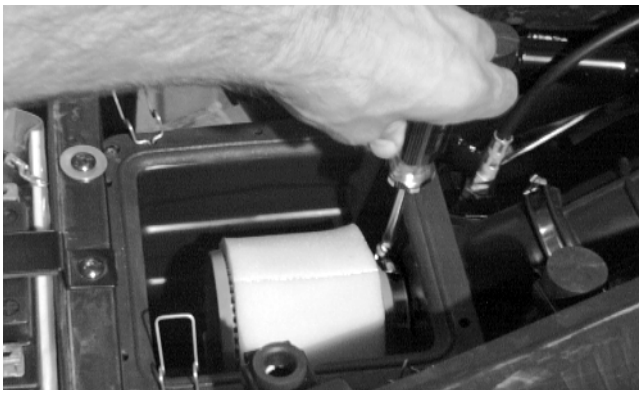

AF640DA

2

www.mymowerparts.com

For Arctic Cat Discount Parts Call 606-678-9623 or 606-561-4983

VALVE/TAPPET CLEARANCE (250)	
Intake	0.03-0.08 mm (0.001-0.003 in.)
Exhaust	0.08-0.13 mm (0.003-0.005 in.)

VALVE/TAPPET CLEARANCE (300)	
Intake	0.03-0.08 mm (0.001-0.003 in.)
Exhaust	0.17-0.22 mm (0.007-0.009 in.)

VALVE/TAPPET CLEARANCE (400/500)	
Intake	0.05-0.10 mm (0.002-0.004 in.)
Exhaust (400)	0.22-0.27 mm (0.009-0.011 in.)
Exhaust (500)	0.17-0.22 (0.007-0.009 in.)

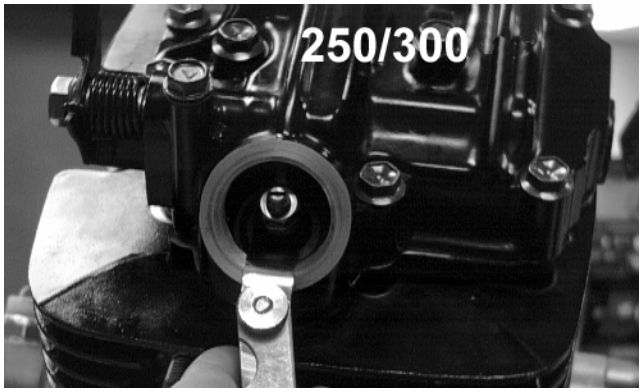

CC409DA

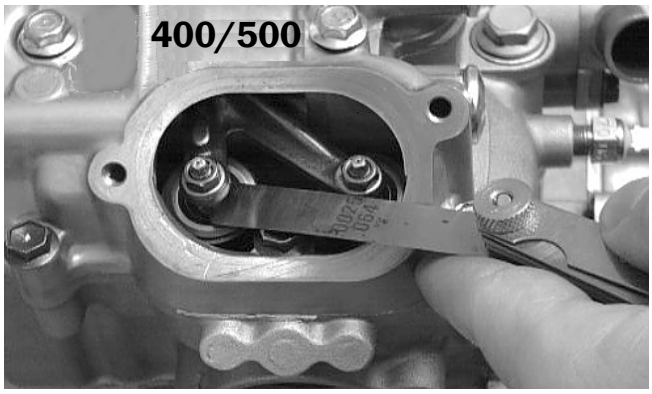

CC007DA

4. Install the timing inspection plug.

5. Place the two tappet covers into position making sure the proper cap screws are with the proper cover. Tighten the cap screws securely.

Valve/Tappet Clearance
(Valve Adjuster Procedure)

To check and adjust valve/tappet clearance, use the following procedure.

■ NOTE: On the 250/300, the seat and air-intake snorkel must be removed for this procedure.

■ NOTE: On the 400/500, the seat assembly, side panels, and gas tank must be removed for this procedure.

1. Remove the timing inspection plug; then remove the tappet covers (for more detailed information, see Section 3 - Servicing Top-Side Components).

2. Rotate the crankshaft to the TDC position on the compression stroke.

■ NOTE: At this point, the rocker arms and adjuster screws must not have pressure on them.

■ NOTE: Use Valve Gap Adjuster (p/n 0444-092) for the 250/300 or Valve Clearance Adjuster (p/n 0444-078) for the 400/500 for this procedure.

3. Place the valve adjuster onto the jam nut securing the tappet adjuster screw; then rotate the valve adjuster dial clockwise until the end is seated in the tappet adjuster screw.

4. While holding the valve adjuster dial in place, use the valve adjuster handle and loosen the jam nut; then rotate the tappet adjuster screw clockwise until friction is felt.

5. Align the valve adjuster handle with one of the marks on the valve adjuster dial.

6. While holding the valve adjuster handle in place, rotate the valve adjuster dial counterclockwise until proper valve/tappet clearance is attained.

■ NOTE: Refer to the appropriate specifications in Feeler Gauge Procedure sub-section for the proper valve/tappet clearance.

■ NOTE: Rotating the valve adjuster dial counterclockwise will open the valve/tappet clearance by 0.05 mm (0.002 in.) per mark.

7. While holding the adjuster dial at the proper clearance setting, tighten the jam nut securely with the valve adjuster handle.

8. Place the two tappet covers with O-rings into position; then tighten the covers securely.

www.mymowerparts.com

For Arctic Cat Discount Parts Call 606-678-9623 or 606-561-4983

CC366D

9. Install the spark plug; then install the timing inspection plug.

CC411D

Testing Engine Compression

To test engine compression, use the following procedure.

1. Remove the high tension lead from the spark plug.
2. Using compressed air, blow any debris from around the spark plug.

⚠ WARNING

Always wear safety glasses when using compressed air.

3. Remove the spark plug; then attach the high tension lead to the plug and ground the plug on the cylinder head well away from the spark plug hole.
4. Attach the Compression Gauge (p/n 0444-096).

■ NOTE: The engine must be warm and the battery must be fully charged for this test.

5. While holding the throttle lever in the full-open position, crank the engine over with the electric starter until the gauge shows a peak reading (five to 10 compression strokes).

■ NOTE: For the 250/300, the compression should be within a range of 157.5-192.5 psi in the full-open throttle position. For the 400/500, the compression should be within a range of 63-77 psi in the full-open throttle position.

6. If compression is abnormally low, inspect the following items.
   A. Verify starter cranks engine over.
   B. Gauge is functioning properly.
   C. Throttle lever in the full-open position.
   D. Valve/tappet clearance correct.
   E. Valve bent or burned.
   F. Valve seat burned.

■ NOTE: To service valves, see Section 3.

7. Pour 29.5 ml (1 fl oz) of oil into the spark plug hole, reattach the gauge, and retest compression.
8. If compression is now evident, service the piston rings (see Section 3).

Spark Plug

A light brown insulator indicates that the plug is correct. A white or dark insulator indicates that the engine may need to be serviced or the carburetor may need to be adjusted. To maintain a hot, strong spark, keep the plug free of carbon.

Back to Table of Contents
Back to Section Table of Contents

www.mymowerparts.com

For Arctic Cat Discount Parts Call 606-678-9623 or 606-561-4983

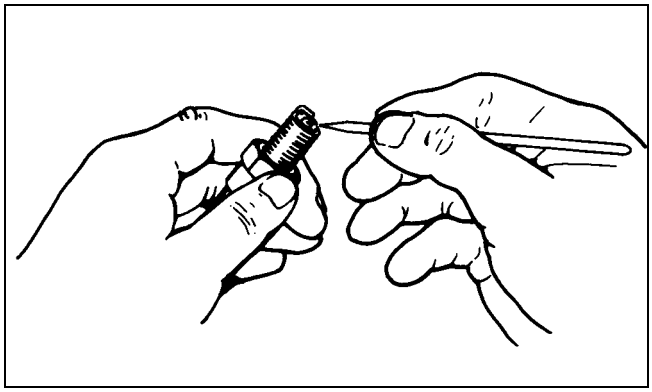

ATV-0051

⚠ CAUTION

Before removing the spark plug, be sure to clean the area around the spark plug. Dirt could enter engine when removing or installing the spark plug.

Adjust the gap to 0.6 - 0.7 mm (0.024 - 0.028 in.) on the 250/300 or to 0.7 - 0.8 mm (0.028 - 0.032 in.) on the 400/500 for proper ignition. Use a feeler gauge to check the gap.

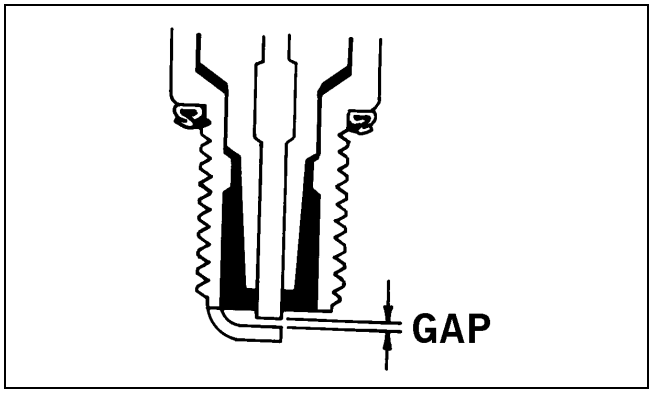

ATV0052B

When installing the spark plug, be sure to tighten it securely. A new spark plug should be tightened 1/2 turn once the washer contacts the cylinder head. A used spark plug should be tightened 1/8 - 1/4 turn once the washer contacts the cylinder head.

Muffler/Spark Arrester

The muffler has a spark arrester which must be periodically cleaned. At the intervals shown in the Periodic Maintenance Chart, clean the spark arrester using the following procedure.

⚠ WARNING

Wait until the muffler cools to avoid burns.

■NOTE: Determine which style muffler/spark arrester is being serviced and refer to the appropriate procedure.

STYLE A

1. Shift the transmission into neutral and set the brake lever lock.
2. Elevate the front of the ATV on a safety stand until the muffler is horizontal.
3. Remove the plug from the bottom of the muffler.

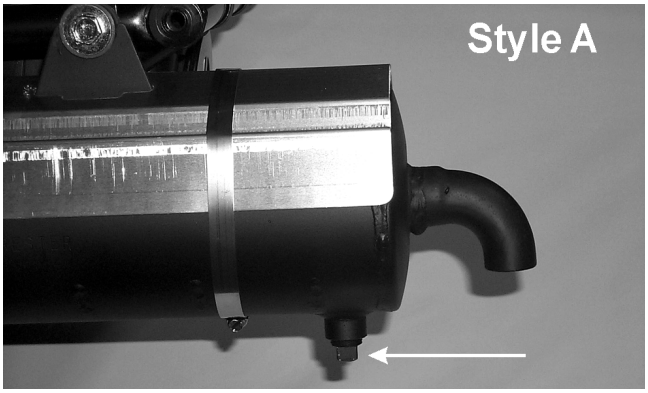

AN600A

4. Start the engine and increase RPM to “blow out” the accumulated carbon particles.
5. Stop the engine. Wait until the muffler cools; then install the plug and tighten securely.

STYLE B

1. Remove the nuts securing the spark arrester; then remove the arrester.

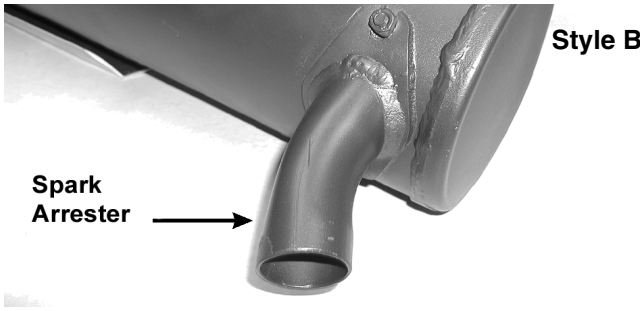

AN616A

2. Using a wire brush, remove carbon deposits from the arrester taking care not to damage the screen.

AN617

www.mymowerparts.com

For Arctic Cat Discount Parts Call 606-678-9623 or 606-561-4983

3. Check the arrester screen for holes or tears, and check the condition of the gasket. Replace components as necessary.

4. Install the spark arrester and nuts; tighten nuts to 1.1 kg-m (8 ft-lb).

Gas/Vent Hoses

Replace the gas hose every two years. Damage from aging may not always be visible. Do not bend or obstruct the routing of the carburetor vent hose. Make certain that the vent hose is securely connected to the carburetor and the opposite end is always open.

Adjusting Throttle Cable

To adjust the throttle cable free-play, follow this procedure.

1. Slide the rubber boot away; then loosen the jam nut from the throttle cable adjuster.

AL611D

2. Slide the rubber boot away and turn the adjuster until the throttle cable has proper free-play of 3-6 mm (1/8 - 1/4 in.) at the lever.

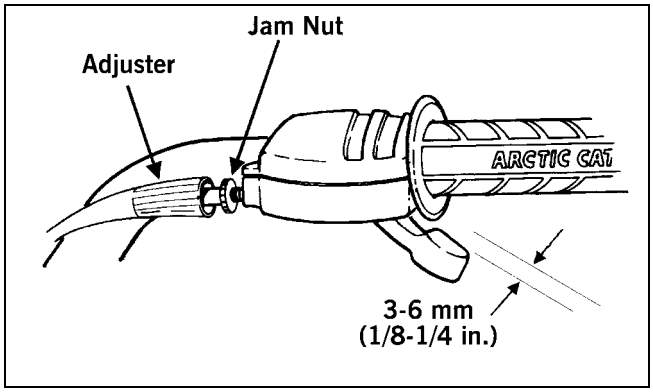

ATV-0047

3. Tighten the jam nut against the throttle cable adjuster securely; then slide the rubber boot over the adjuster.

Adjusting Engine RPM (Idle)

To properly adjust the idle RPM, a tachometer is necessary. To adjust idle RPM, use the following procedure.

■ NOTE: To access the idle adjustment screw, it will be necessary to remove the seat on the 250/300 models. The idle adjustment screw is located on the right-hand side of the carburetor on the 400/500 models.

1. With the transmission in neutral, start the engine and warm it up to normal operating temperature.

2. Turn the idle adjustment screw clockwise one turn past the recommended RPM setting; then turn it counterclockwise to the correct RPM setting.

CC795B

Back to Table of Contents
Back to Section Table of Contents

www.mymowerparts.com

For Arctic Cat Discount Parts Call 606-678-9623 or 606-561-4983

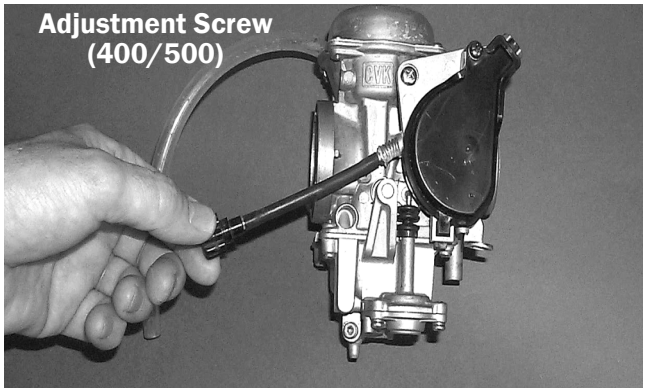

AF920C

IDLE RPM	
MODEL	RPM
250/300	1300-1400
400/500	1250-1350

⚠ WARNING

Adjust the idle to the correct RPM. Make sure the engine is at normal operating temperature before adjusting the idle RPM.

Engine/Transmission Oil - Filter - Strainer (250/300)

OIL - FILTER

Change the engine oil and oil filter at the scheduled intervals. The engine should always be warm when the oil is changed so the oil will drain easily and completely.

1. Park the ATV on level ground.
2. Remove the oil filler plug.

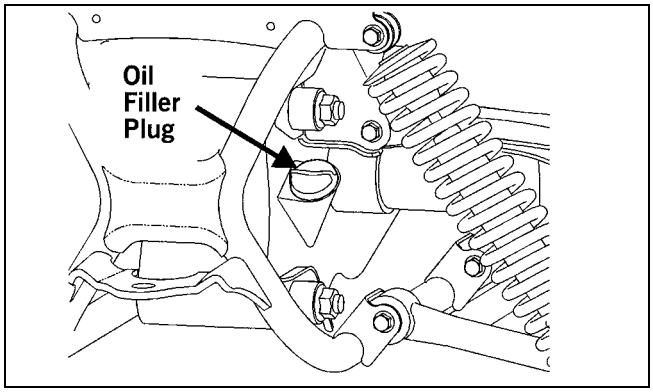

733-714A

3. Remove both drain plugs from the bottom of the engine and drain the oil into a drain pan.

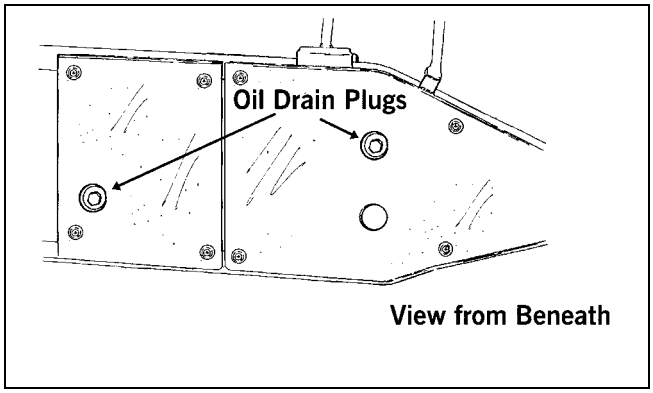

733-441C

4. Remove the nuts securing the filter cover.
5. Remove the filter cover; then pull out the oil filter element and properly discard. Remove and properly discard the O-ring from the filter cover.

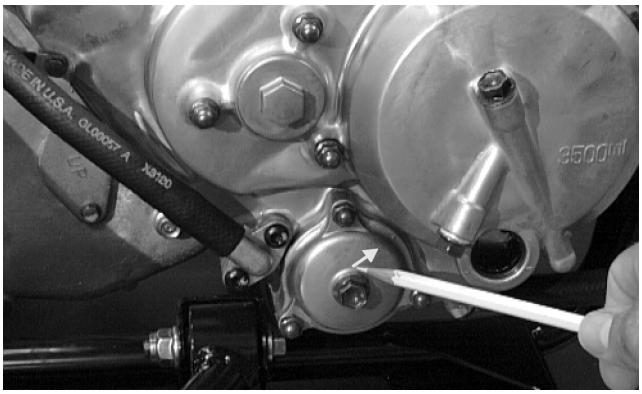

CH080DA

■ **NOTE: Clean up any excess oil after removing the filter.**

6. Apply oil to a new cover O-ring and check to make sure it is positioned correctly in the cover. With the open end of the filter element directed toward the center of the engine, slide the element into position.

www.mymowerparts.com

For Arctic Cat Discount Parts Call 606-678-9623 or 606-561-4983

KEY
1. Engine Oil Pump
2. Driven Gear
3. Pin
4. Circlip
5. Cap Screw
6. Strainer
7. Cap Screw
8. Cap
9. O-Ring
10. Cap Screw
11. Drain Plug
12. Gasket
13. Filter
14. Filter O-Ring
15. Cap
16. Check Plug
17. Gasket
18. Cap O-Ring
19. Spring
20. Stud Bolt
21. Stud Bolt
22. Nut

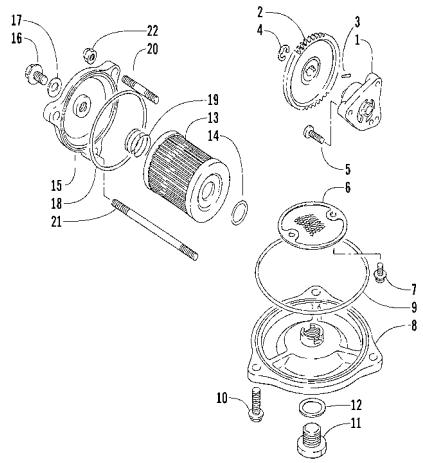

0733-752

⚠ CAUTION

If the oil filter element is inserted backwards, engine damage will occur due to lack of oil flow.

7. Place the filter cover in position and secure with the nuts. Tighten securely.

8. Install the engine drain plugs and tighten to 2.2 kg-m (16 ft-lb). Pour 3.4 L (3.5 U.S. qt) of the recommended oil in the filler hole; then install the filler plug.

⚠ CAUTION

Any oil used in place of the recommended oil could cause serious engine damage. Do not use oils which contain graphite or molybdenum additives. These oils can adversely affect clutch operation. Also, not recommended are racing, vegetable, non-detergent, and castor-based oils.

9. Start the engine (while the ATV is outside on level ground) and allow it to idle for a few minutes.

10. Turn the engine off and wait approximately one minute. Recheck the oil level in the engine oil inspection window. The oil level should be visible through the window. If oil is not visible, add recommended oil until the oil level is visible between the lines of the window.

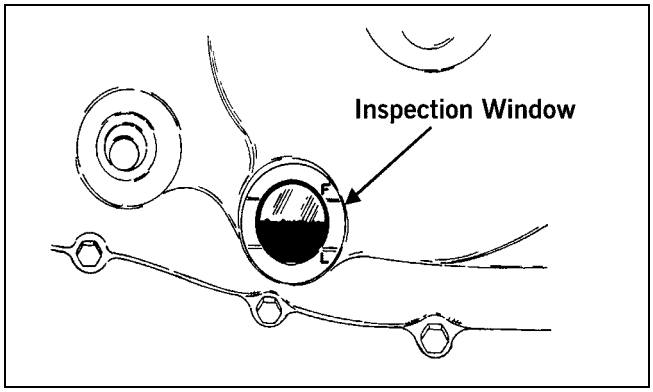

ATV-0074

11. Inspect the area around the drain plug and oil filter for leaks.

STRAINER

To check the oil strainer, use the following procedure.

1. Remove the skid plate.

2. Remove the Phillips-head cap screws securing the oil strainer cap; then remove the cap. Note the directional arrow on the cap for assembly purposes.

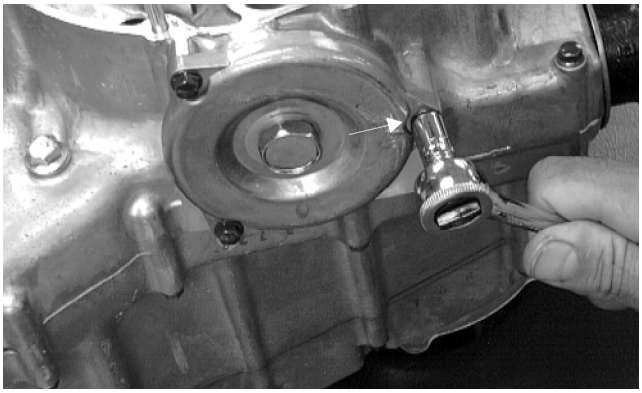

CC442DA

3. Remove the Phillips-head screws securing the strainer; then remove the strainer.

CC443D

■ **NOTE: To service the oil strainer, see Section 3.**

4. Place the oil strainer into position and secure with the Phillips-head screws.

Back to Table of Contents
Back to Section Table of Contents

www.mymowerparts.com

For Arctic Cat Discount Parts Call 606-678-9623 or 606-561-4983

CC443D

5. Place the strainer cap into position on the crankcase; then secure with the Phillips-head cap screws (coated with red Loctite #271). Tighten securely.

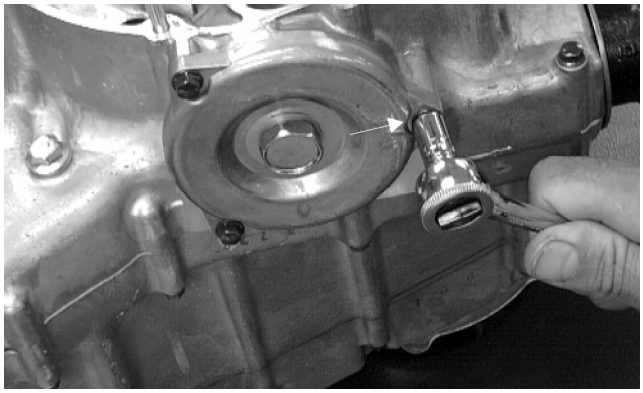

CC442DA

6. Install the skid plate.

Engine/Transmission Oil - Filter - Strainer (400/500)

OIL - FILTER

Change the engine oil and oil filter at the scheduled intervals. The engine should always be warm when the oil is changed so the oil will drain easily and completely.

1. Park the ATV on level ground.
2. Remove the oil level stick/filler plug.

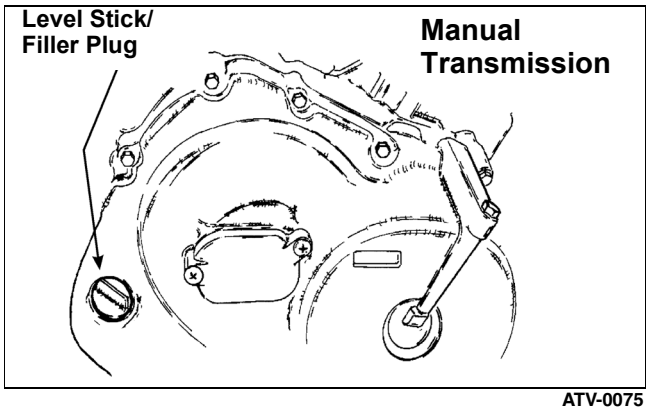

ATV-0075

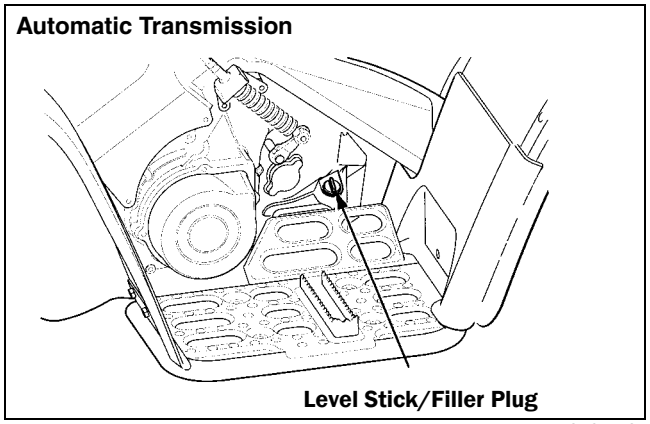

0735-505

3. Remove the drain plug from the bottom of the engine and drain the oil into a drain pan.

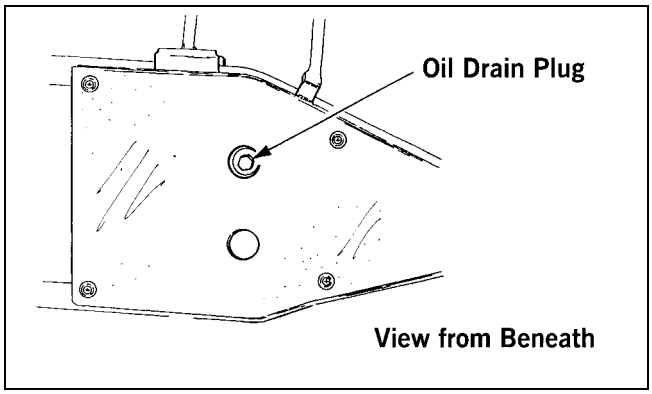

733-441A

4. Remove the oil filter plug from the filter mounting boss (located on the front-right side of the transmission case) and allow the filter to drain completely.
5. Using the Oil Filter Wrench (p/n 0444-042) and a ratchet handle (or a socket or box-end wrench), remove the old oil filter.

■ NOTE: Clean up any excess oil after removing the filter.

6. Apply oil to a new filter O-ring and check to make sure it is positioned correctly; then install the new oil filter. Tighten securely.

■ NOTE: Install a new O-ring each time the filter is replaced.

www.mymowerparts.com

For Arctic Cat Discount Parts Call 606-678-9623 or 606-561-4983

7. Install the oil filter drain plug and tighten securely.

8. Install the engine drain plug and tighten to 2.2 kg-m (16 ft-lb). Pour 3.08 L (3.25 U.S. qt) - 400, 3.4 L (3.5 U.S. qt) - 500 manual, or 2.5 L (2.6 U.S. qt) - 500 automatic of the recommended oil in the filler hole. Install the oil level stick/filler plug.

⚠ CAUTION

Any oil used in place of the recommended oil could cause serious engine damage. Do not use oils which contain graphite or molybdenum additives. These oils can adversely affect clutch operation. Also, not recommended are racing, vegetable, non-detergent, and castor-based oils.

9. Start the engine (while the ATV is outside on level ground) and allow it to idle for a few minutes.

10. Turn the engine off and wait approximately one minute.

11. Unscrew the oil level stick and wipe it with a clean cloth.

12. Install the oil level stick until the threads touch engine case.

■ NOTE: The oil level stick should not be threaded into the case for checking the oil level.

13. Remove the oil level stick; the engine oil level should be above the illustrated "L" mark but not higher than the illustrated "F" mark.

⚠CAUTION

Do not over-fill the engine with oil. Always make sure that the oil level is above the "L" mark but not higher than the "F" mark.

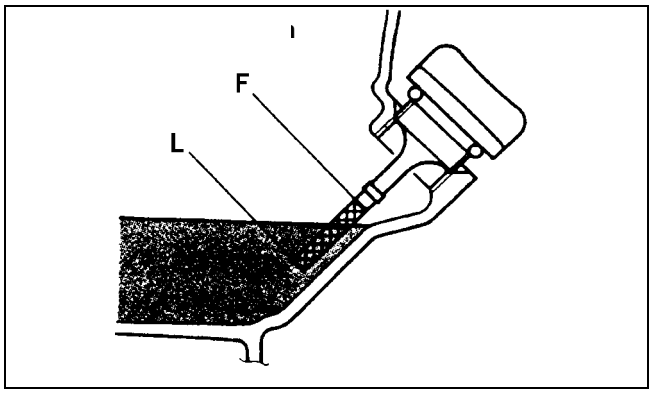

ATV-0100

14. Inspect the area around the drain plug and oil filter for leaks.

STRAINER

To check the oil strainer, use the following procedure.

1. Remove the skid plate.

2. Remove the cap screws securing the oil strainer cap; then remove the cap. Account for the O-ring.

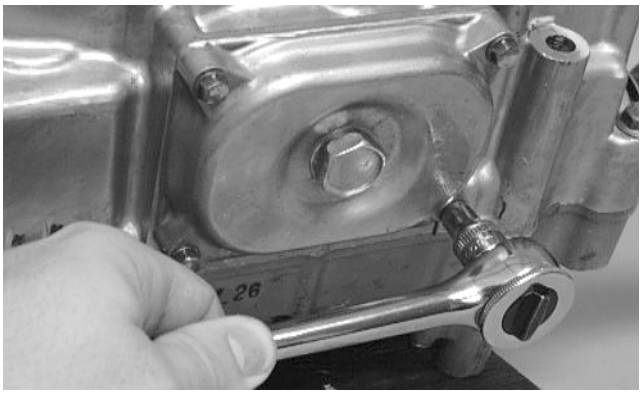

CC091D

3. Remove the two Phillips-head cap screws securing the strainer.

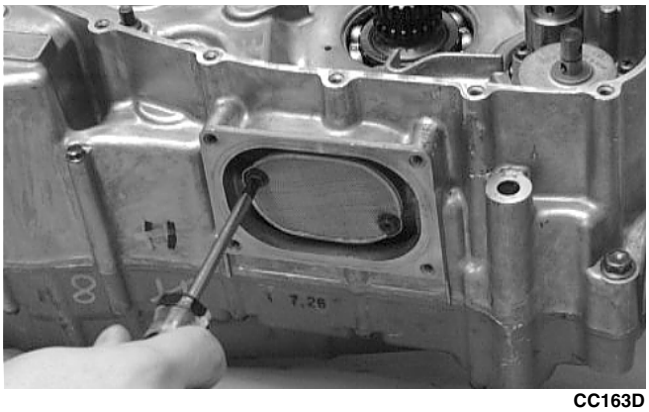

CC163D

■ NOTE: To service oil strainer, see Section 3.

4. Place the oil strainer into position beneath the crankcase and secure with the Phillips-head cap screws. Tighten securely.

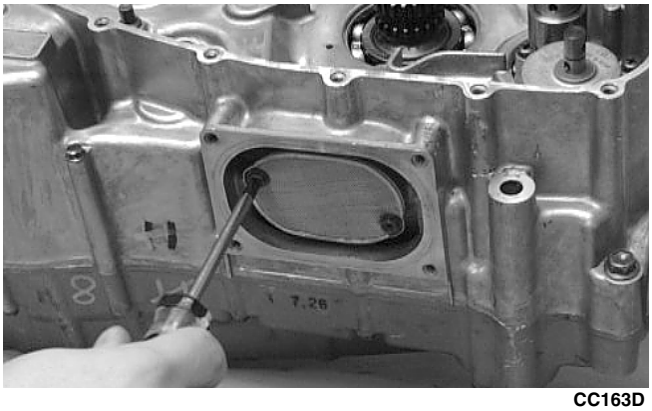

CC163D

5. Place the strainer cap into position on the strainer making sure the O-ring is properly installed; then secure with the cap screws. Tighten securely.

www.mymowerparts.com

For Arctic Cat Discount Parts Call 606-678-9623 or 606-561-4983

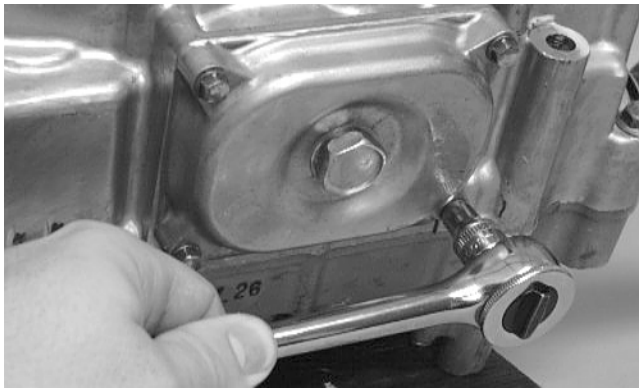

CC091D

6. Install the skid plate.

Front Differential/Rear Drive Lubricant

Check and change the lubricant according to the Periodic Maintenance Chart. When changing the lubricant, use approved SAE 80W-90 hypoid gear lube. To check lubricant, use the following procedure.

1. On FIS models, remove the rear drive filler plug; the lubricant level should be 1 in. below the threads of the plug. If low, add SAE approved 80W-90 hypoid gear lube as necessary.

2. On ACT models, remove the rear drive inspection plug; the lubricant level should be at the threads of the plug. If low, add SAE approved 80W-90 hypoid gear lube as necessary.

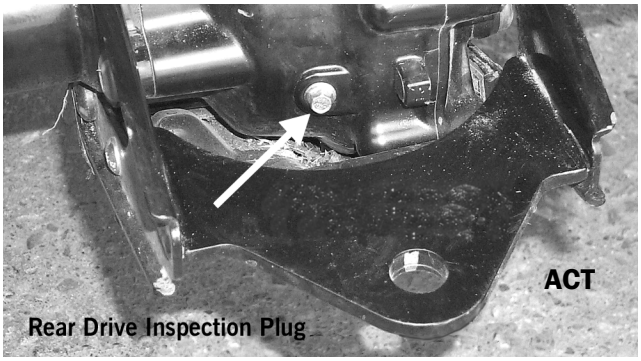

AF923A

To change the lubricant, use the following procedure.

1. Place the ATV on level ground.

2. Remove each oil filler plug.

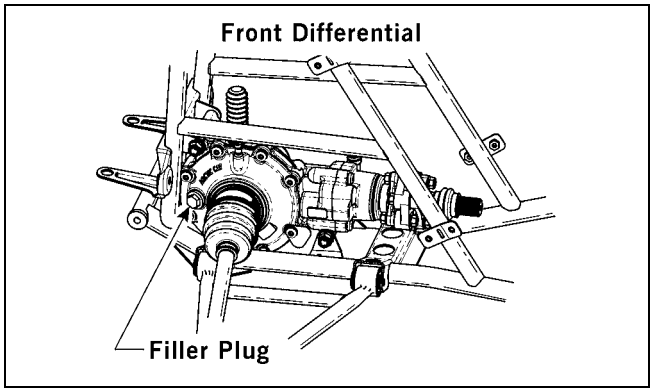

0736-568

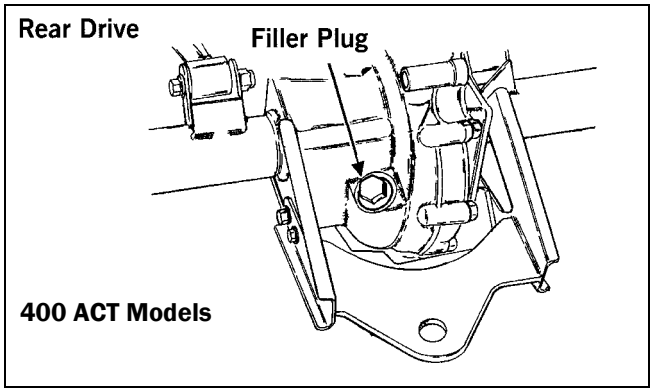

ATV-0077

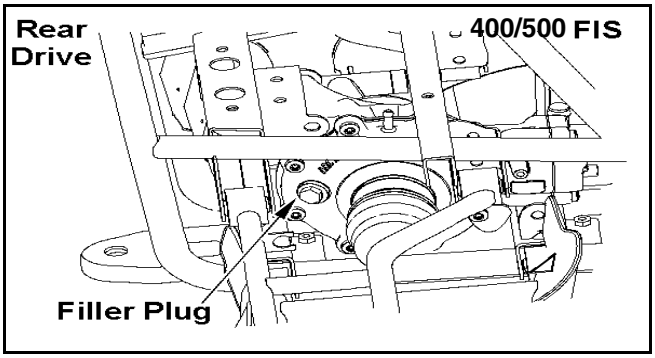

737-686A

3. Drain the oil into a drain pan by removing in turn the drain plug from each.

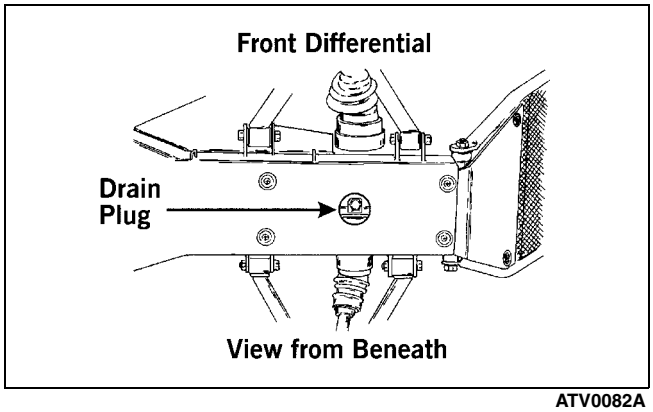

ATV0082A

www.mymowerparts.com

For Arctic Cat Discount Parts Call 606-678-9623 or 606-561-4983

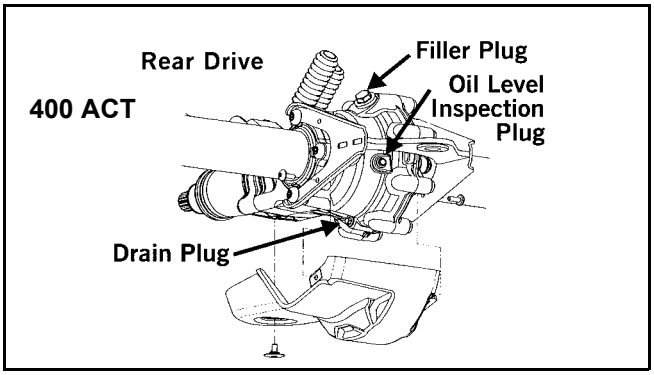

ATV-1096

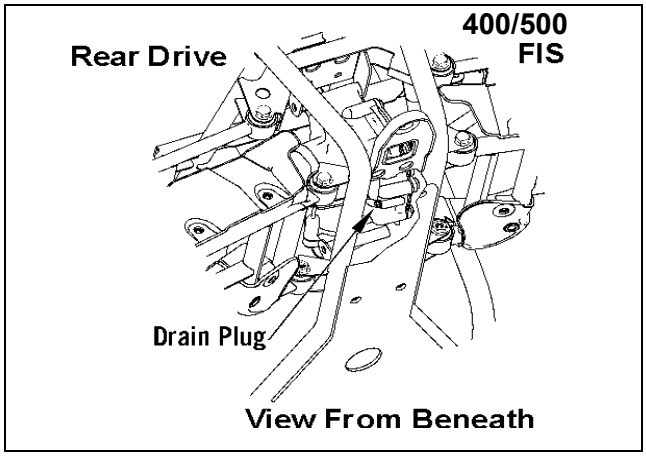

737-651A

4. After all the oil has been drained, install the drain plugs and tighten to 0.5 kg-m (3.5 ft-lb).
5. Pour the appropriate amount of recommended oil into the filler hole.
6. Install the filler plugs.

■ NOTE: If the differential/rear drive oil is contaminated with water, inspect the drain plug, filler plug, and/or bladder.

⚠ CAUTION

Water entering the outer end of the axle will not be able to enter the rear drive unless the seals are damaged.

Adjusting Clutch (250/300)

To adjust the clutch, use the following procedure.

1. Using an impact driver, remove the cover. Account for the O-ring.

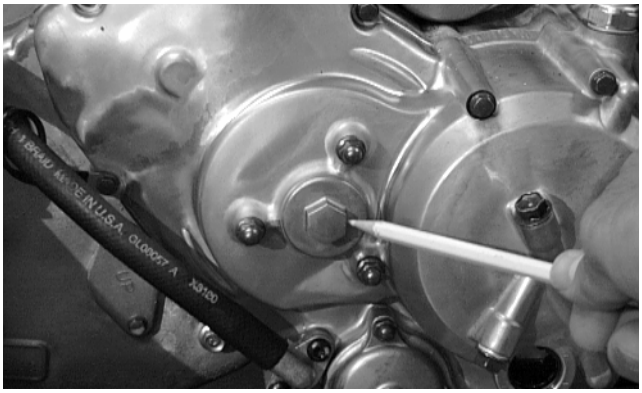

CH081D

2. Loosen the jam nut securing the adjustment screw.

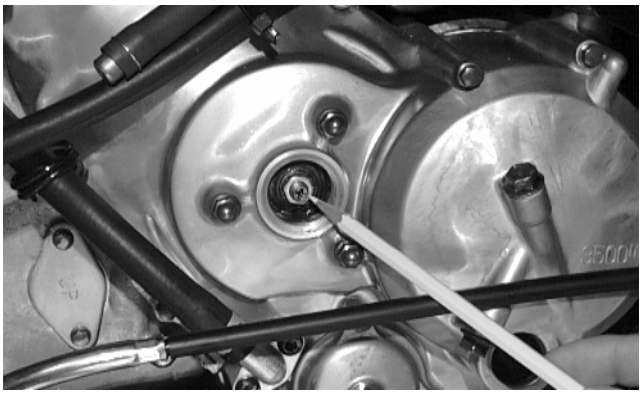

CH086D

3. Rotate the adjustment screw clockwise until it stops.
4. Rotate the adjustment screw counterclockwise 1/8 turn; then lock the jam nut securing the adjustment screw.

■ NOTE: At this point the clutch should be adjusted correctly. Test ride the ATV to ensure accurate adjustment.

5. Secure the cover making sure the O-ring is properly positioned.

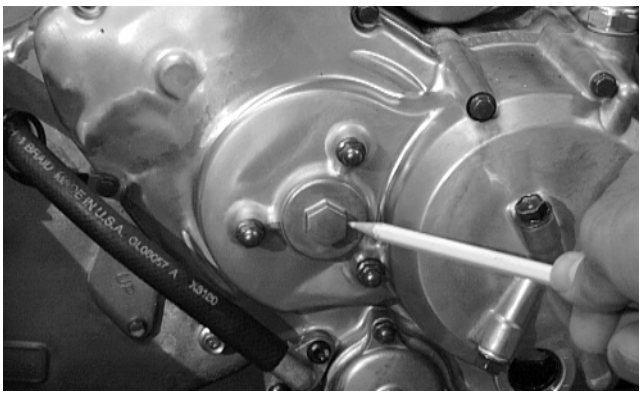

CH081D

Back to Table of Contents
Back to Section Table of Contents

www.mymowerparts.com

For Arctic Cat Discount Parts Call 606-678-9623 or 606-561-4983

Adjusting Clutch
(400/500 Manual Transmission)

To adjust the clutch, use the following procedure.

1. Using an impact driver, remove the screws securing the cover and remove the cover. Account for the O-ring.

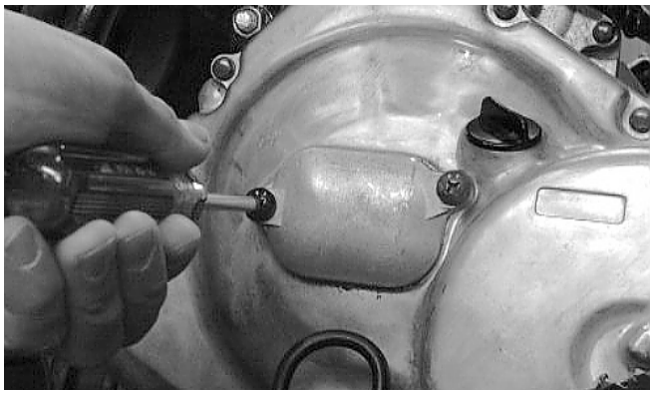

AM600D

2. Loosen the jam nuts securing adjustment screw #1 (forward) and adjustment screw #2 (rearward).

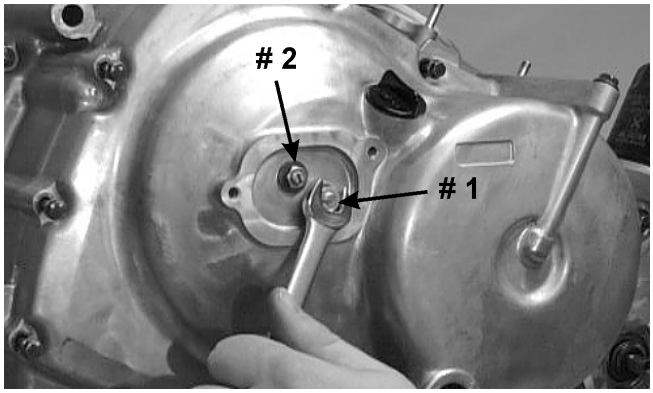

CC037D

3. Rotate adjustment screw #1 counterclockwise until it stops.

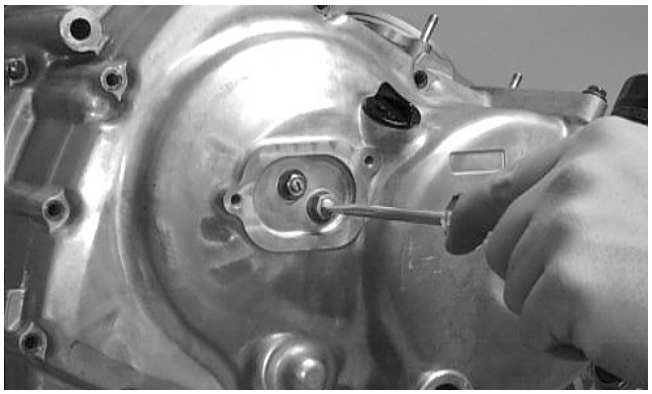

CC038D

4. Rotate adjustment screw #2 alternately clockwise and counterclockwise to ensure free movement without binding; then lock the jam nut securing adjustment screw #2.

5. Rotate adjustment screw #1 clockwise 1/8 turn; then lock the jam nut securing adjustment screw #1.

■ NOTE: At this point the clutch should be adjusted correctly. Test to ensure accurate adjustment.

6. Install the cover making sure the O-ring is properly positioned; then secure with the screws.

Tires

2

TIRE SIZES

The ATV is equipped with low-pressure tubeless tires of the size and type listed. Do not under any circumstances substitute tires of a different type or size.

⚠ WARNING

Always use the size and type of tires specified. Always maintain proper tire inflation pressure.

TIRE INFLATION PRESSURE

Front and rear tire inflation pressure should be 0.35 kg-cm² (5.0 psi).

A low-pressure gauge is provided in the tool kit to measure the air pressure in the tires. Check the air pressure in all tires before each use of the ATV.

Steering Components

The following steering components should be inspected periodically to ensure safe and proper operation.

A. Handlebar grips not worn, broken, or loose.
B. Handlebar not bent, cracked, and has equal and complete full-left and full-right capability.
C. Steering post bearing assembly/bearing housing not broken, worn, or binding.
D. Ball joints not worn, cracked, or damaged.
E. Tie rods not bent or cracked.
F. Knuckles not worn, cracked, or damaged.
G. Cotter pins not damaged or missing.

www.mymowerparts.com

For Arctic Cat Discount Parts Call 606-678-9623 or 606-561-4983

Driveshaft/Coupling

The following drive system components should be inspected periodically to ensure proper operation.

A. Spline lateral movement (slop).
B. Rubber coupling cracked, damaged, or worn.

Suspension/Shock Absorbers/Bushings

The following suspension system components should be inspected periodically to ensure proper operation.

A. Shock absorber rods bent, pitted, or damaged.
B. Rubber damper cracked, broken, or missing.
C. Shock absorber body damaged, punctured, or leaking.
D. Shock absorber eyelets broken, bent, or cracked.
E. Shock absorber eyelet bushings worn, deteriorated, cracked, or missing.
F. Shock absorber spring broken or sagging.

Nuts/Bolts/Cap Screws

Tighten all nuts, bolts, and cap screws. Make sure rivets holding components together are tight. Replace all loose rivets. Care must be taken that all calibrated nuts, bolts, and cap screws are tightened to specifications. For proper torque values, see Section 10.

Ignition Timing

The ignition timing cannot be adjusted; however, verifying ignition timing can aid in troubleshooting other components. To verify engine timing, use the following procedure.

1. Attach the engine Timing Light (p/n 0644-197) to the spark plug high tension lead; then remove the timing inspection plug from the left-side crankcase cover.
2. Using the Arctic Cat Engine Tachometer (p/n 0644-275), start the engine and run at the recommended RPM; ignition timing should be the recommended degrees BTDC.

IGNITION TIMING	
MODEL	**TIMING/RPM**
250	5° BTDC below 1800 35° BTDC above 3800
300	5° BTDC @ 1800 30° BTDC @ 3800
400	10° BTDC @ 3000
500	10° BTDC @ 1500

3. Install the timing inspection plug.

If ignition timing cannot be verified, the rotor may be damaged, the key may be sheared, the trigger coil bracket may be bent or damaged, or the CDI unit may be faulty.

Headlight/Taillight-Brakelight

Each time the ATV is used, lights should be checked for proper function. Rotate the ignition switch to the lights position; the headlights and taillight should illuminate. Test the brakelight by compressing the brake lever. The brakelight should illuminate.

HEADLIGHT

■ NOTE: The bulb portion of the headlight is fragile. HANDLE WITH CARE. When replacing the headlight bulb, do not touch the glass portion of the bulb. If the glass is touched, it must be cleaned with a dry cloth before installing. Skin oil residue on the bulb will shorten the life of the bulb.

⚠ WARNING

Do not attempt to remove the bulb when it is hot. Severe burns may result.

To replace the headlight bulb, use the following procedure.

1. Remove the wiring harness connector from the back of the headlight.
2. Grasp the bulb housing, turn it counterclockwise, and remove the bulb.
3. Install the new bulb into the housing and rotate it completely clockwise.
4. Install the wiring harness connector.

Back to Table of Contents
Back to Section Table of Contents

www.mymowerparts.com

For Arctic Cat Discount Parts Call 606-678-9623 or 606-561-4983

TAILLIGHT-BRAKELIGHT

To replace the taillight-brakelight bulb, use the following procedure.

1. Remove the two screws and remove the lens cover.
2. Push the bulb in and turn it counterclockwise.
3. Install the new bulb by turning it clockwise while pushing in.
4. Install the lens cover.

⚠ CAUTION

Tighten the lens cover screws only until they are snug.

CHECKING/ADJUSTING HEADLIGHT AIM

The headlights can be adjusted vertically and horizontally. The geometric center of the HIGH beam light zone is to be used for vertical and horizontal aiming.

1. Position the ATV on a level floor so the headlights are approximately 6.1 m (20 ft) from an aiming surface (wall or similar aiming surface).

■ NOTE: There should be an average operating load on the ATV when adjusting the headlight aim.

2. Measure the distance from the floor to the mid-point of each headlight.
3. Using the measurements obtained in step 2, make horizontal marks on the aiming surface.
4. Make vertical marks which intersect the horizontal marks on the aiming surface directly in front of the headlights.
5. Switch on the lights. Make sure the HIGH beam is on. DO NOT USE LOW BEAM.
6. Observe each headlight beam aim. Proper aim is when the most intense beam is centered on the vertical mark 5 cm (2 in.) below the horizontal mark on the aiming surface.

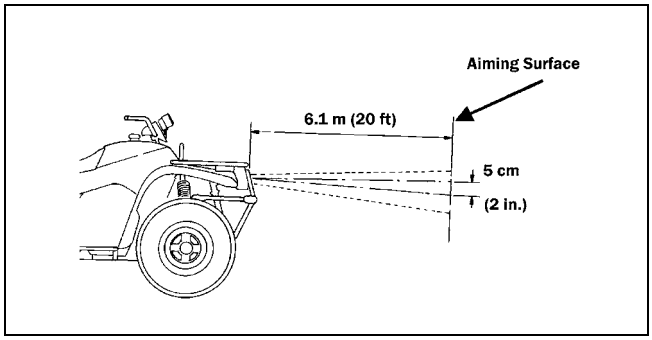

ATV-0070BA

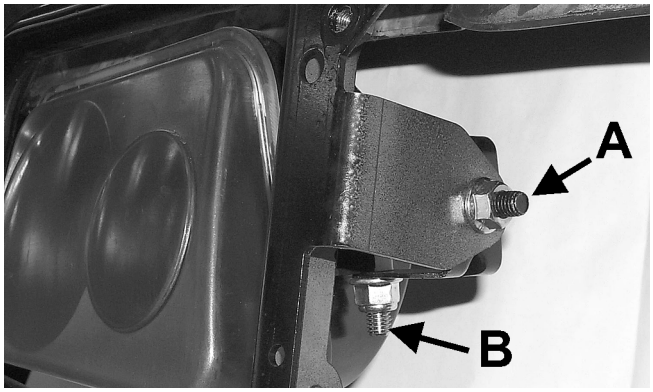

AF926A

7. Adjust each headlight until correct aim is obtained.
   A. Horizontal — Loosen nut (A) and adjust for proper aiming. Tighten the nut securely.
   B. Vertical— Loosen nut (B) and adjust for proper aiming. Tighten the nut securely.

Switches

Each time the ATV is used, switches should be checked for proper operation. Use the following list for reference.

A. Ignition switch — engine will start.
B. Emergency stop switch — engine will stop.
C. Reverse switch — reverse indicator light illuminates.
D. Hi/Lo switch — headlight beam bright and dim.
E. Brake switches — rear brakelight illuminates.

Reverse Shift Lever

CHECKING ADJUSTMENT

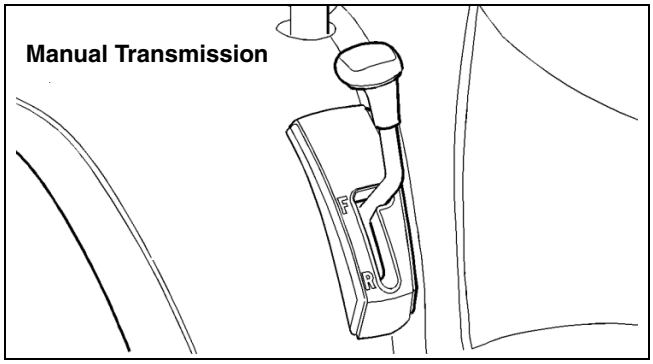

0736-566

www.mymowerparts.com

For Arctic Cat Discount Parts Call 606-678-9623 or 606-561-4983

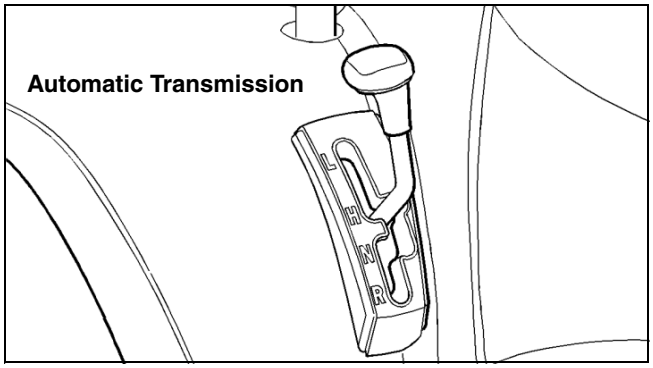

0736-565

Stop the ATV completely and shift the transmission into the R position. The reverse gear indicator light should be illuminated.

⚠ WARNING

Never shift the ATV into reverse gear when the ATV is moving as it could cause the ATV to stop suddenly throwing the operator from the ATV.

If the reverse lever light does not illuminate when shifted to the reverse position, the switch may be faulty, the fuse may be blown, the bulb may be faulty, a connection may be loose or corroded, or the lever may need adjusting. To adjust, proceed to Adjusting Shift Lever.

ADJUSTING SHIFT LEVER

KEY
1. Nut
2. Cap Screw
3. Axle
4. Shift Lever
5. O-Ring
6. O-Ring
7. Washer
8. Spring
9. Axle
10. Handle
11. Push Clip
12. Linkage
13. Rod End
14. Nut
15. Bushing
16. Washer
17. E-Ring
18. Reverse Switch
19. Retainer
20. Bracket
21. Cap Screw
22. Shift Plate
23. Shield
24. Machine Screw
25. Self-Tapping Screw

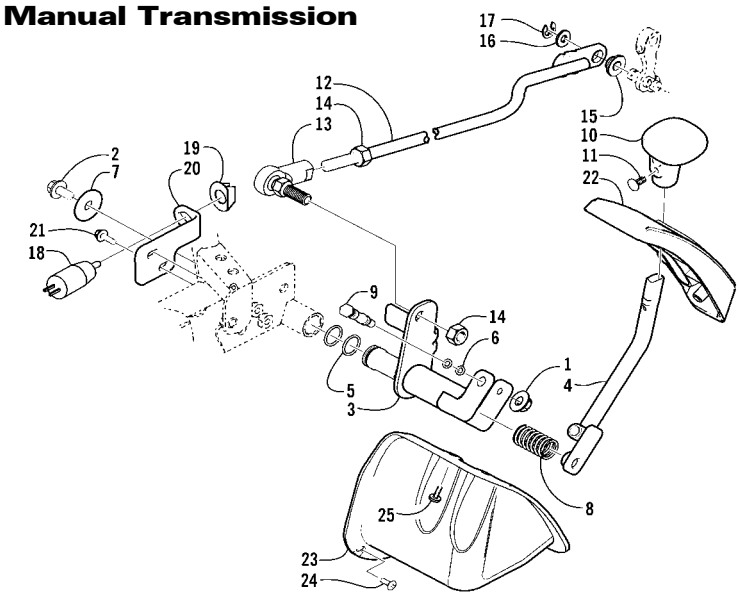

0737-593

Back to Table of Contents
Back to Section Table of Contents

www.mymowerparts.com

For Arctic Cat Discount Parts Call 606-678-9623 or 606-561-4983

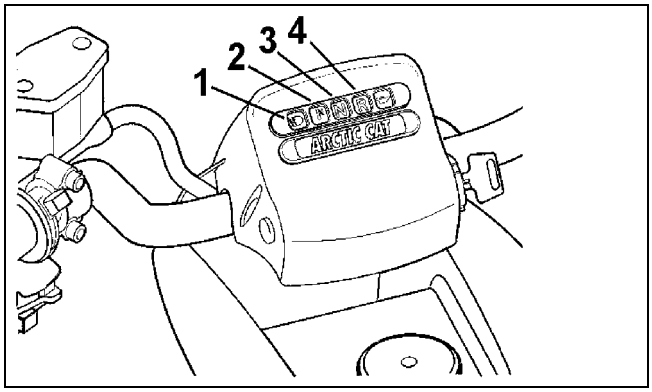

733-707B

1. **High Beam Indicator** — A blue light will illuminate when the lights are on high beam. The light will not be illuminated when the lights are switched to low beam.

2. **Temperature Indicator** — A red light will illuminate if the engine overheats. The light should be off during normal operation.

⚠ CAUTION

Continued operation of the ATV with high engine temperature may result in engine damage or premature wear.

■NOTE: High engine RPM, low vehicle speed, or heavy load can raise engine temperature. Decreasing engine RPM, reducing load, and selecting an appropriate transmission gear can lower the temperature.

■NOTE: Debris in front of the engine (or packed between the cooling fins of the radiator on the 500 or packed between the oil cooler cooling fins on the 250/300/400) can reduce cooling capability. Using a hose, pressure-wash the radiator (on the 500) or engine and oil cooler (on the 250/300/400) to remove any debris preventing air flow.

Coolant Temperature Switch	
OFF to ON	115° C (239° F) - Approx
ON to OFF	108° C (226° F) - Approx

3. **Neutral Indicator** — A green light will illuminate when the transmission is in neutral and the ignition switch is on. The light will go out when shifted into any gear other than neutral.

4. **Reverse Indicator** — An orange light will illuminate when the transmission is shifted into reverse gear. The light will go off when shifted out of reverse.

Frame/Welds/Racks

The frame, welds, and racks should be checked periodically for damage, bends, cracks, deterioration, broken components, and missing components. If replacement or repair constitutes removal, see Section 8.

Electrical Connections

The electrical connections should be checked periodically for proper function. In case of an electrical failure, check fuses, connections (for tightness, corrosion, damage), and/or bulbs. If an electrical component needs to be tested for proper function, see Section 5.

Hydraulic Hand Brake System

CHECKING/BLEEDING

The hydraulic brake system has been filled and bled at the factory. To check and/or bleed the hydraulic brake system, use the following procedure.

1. With the master cylinder in a level position, check the fluid level. It must be above the lower mark and below the upper mark.

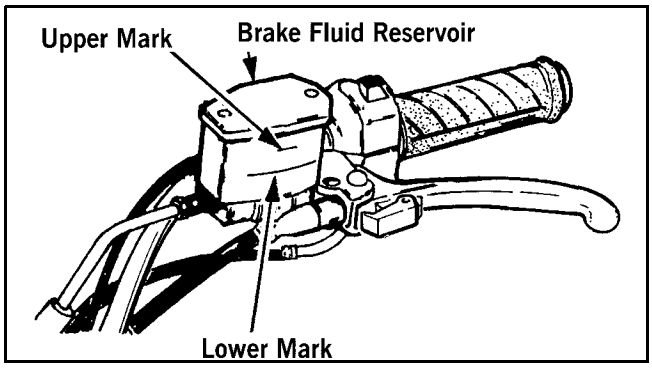

733-443C

2. Compress the brake lever several times to check for a firm lever. If the lever is not firm, the brake system must be bled.

3. To bleed the brake system, use the following procedure.

Back to Table of Contents
Back to Section Table of Contents

www.mymowerparts.com

For Arctic Cat Discount Parts Call 606-678-9623 or 606-561-4983

A. Remove the cover and fill the master cylinder with DOT 4 Hi-Temp Brake Fluid (p/n 1639-799).

B. Install and secure the cover; then slowly compress the brake lever several times.

C. Remove the protective cap, install one end of a clear hose onto one FRONT bleeder screw, and direct the other end into a container; then while holding slight pressure on the brake lever, open the bleeder screw and watch for air bubbles. Close the bleeder screw before releasing the brake lever. Repeat this procedure until no air bubbles are present.

AF637D

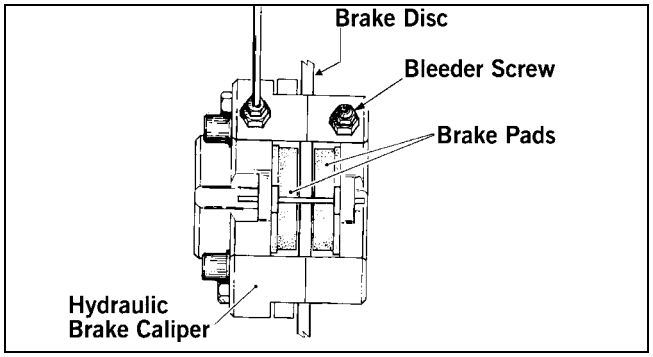

730-434B

■ NOTE: During the bleeding procedure, watch the master cylinder reservoir very closely to make sure there is always a sufficient amount of brake fluid. If the fluid level gets below the bottom line on the reservoir, refill the reservoir before the bleeding procedure is continued.

D. Repeat step C until the brake lever is firm.

E. At this point, perform step B, C, and D on the other FRONT bleeder screw; then move to the REAR bleeder screw and follow the same procedure.

4. Carefully check the entire hydraulic brake system that all hose connections are tight, the bleed screws are tight, the protective caps are installed, and no leakage is present.

⚠ CAUTION

This hydraulic brake system is designed to use high-temperature DOT 4 brake fluid only. If brake fluid must be added, care must be taken as brake fluid is very corrosive to painted surfaces.

⚠ WARNING

Using the Operator's Manual as a guide, instruct the customer on the proper use, care, burnishing procedure, and maintenance of the hydraulic brake system.

2

INSPECTING HOSES

Carefully inspect the hydraulic brake hoses for cracks or other damage. If found, the brake hoses must be replaced.

CHECKING/REPLACING PADS

The clearance between the brake pads and brake discs is adjusted automatically as the brake pads wear. The only maintenance that is required is replacement of the brake pads when they show excessive wear. Check the thickness of each of the brake pads as follows.

1. Remove a front wheel.

2. Measure the thickness of each brake pad.

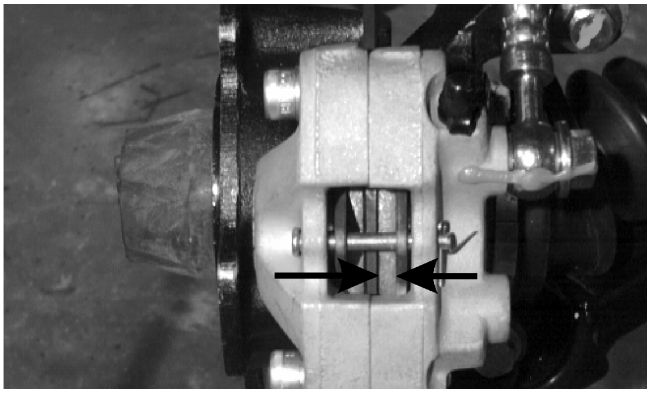

AF739DB

3. If thickness of either brake pad is less than 3.2 mm (0.125 in.), the brake pads must be replaced.

■ NOTE: The brake pads should be replaced as a set.

4. To replace the brake pads, use the following procedure.

   A. Remove the wheel.

   B. Remove the cap screws securing the caliper to the bracket; then remove the cotter pin securing the pads and remove the pads.

www.mymowerparts.com

For Arctic Cat Discount Parts Call 606-678-9623 or 606-561-4983

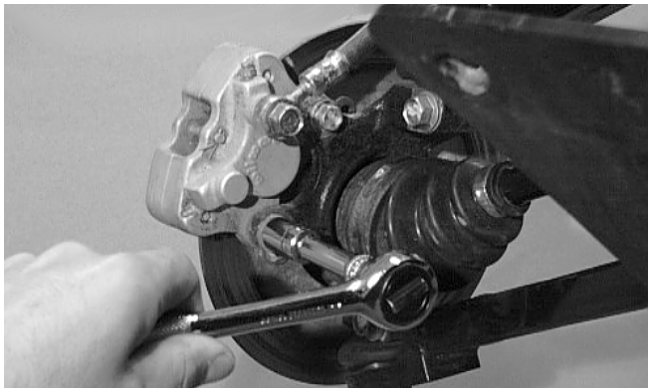

AF615D

C. Install the new brake pads; then secure with the pin and cotter pin. Spread the cotter pin.

D. Secure the caliper to the knuckle and/or axle housing with the cap screws. Tighten to 2.8 kg-m (20 ft-lb).

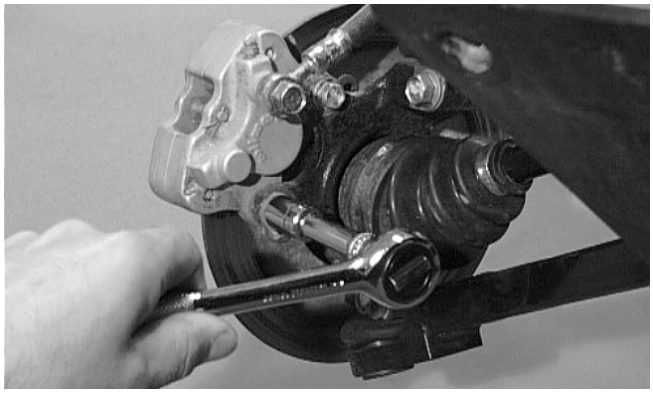

AF615D

E. Install the wheel. Tighten to 5.5 kg-m (40 ft-lb).

5. Burnish the brake pads (see Burnishing Brake Pads in this section).

Auxiliary Brake

CHECKING

Although the auxiliary brake has been adjusted at the factory, the brake should be checked for proper operation. The brake must be maintained to be fully functional.

1. With the engine off, transmission in neutral, and the reverse lever in the forward position, press the brake pedal and attempt to move the ATV.

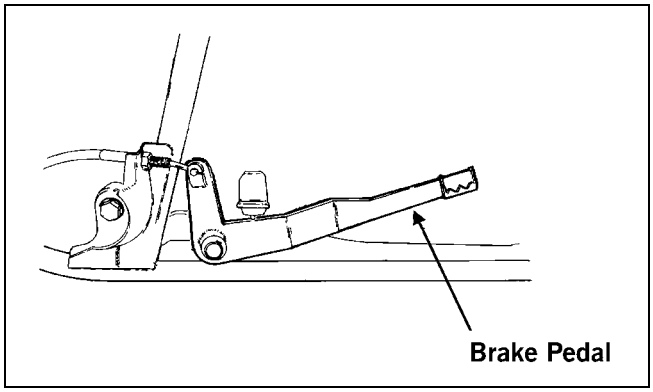

ATV0088D

2. If the rear wheels are locked, it is adjusted properly.

3. If the rear wheels are not locked, it must be adjusted (set up).

ADJUSTING

To adjust (set up) the auxiliary brake, use the following procedure.

■ NOTE: Removal of the right, rear wheel enhances access to the brake components.

1. Loosen the right-hand jam nut (wheel-side when viewing from behind) of the adjuster arm.

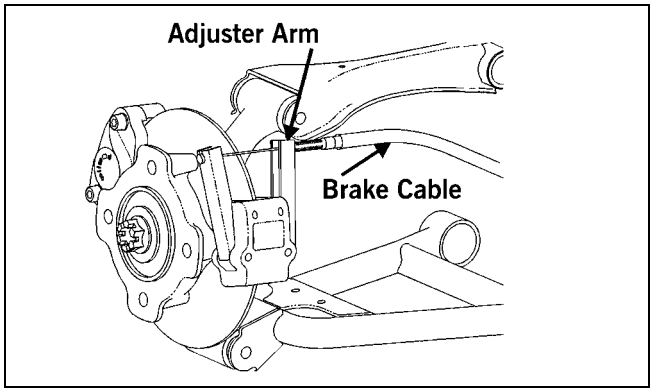

733-730B

2. Pull the brake cable to the left and push the adjuster arm to the right.

3. While holding the cable and adjuster arm in this position, finger-tighten the left-hand jam nut until it contacts the adjuster arm; then loosen it one turn.

4. Tighten the right-hand jam nut securely against the adjuster arm.

■ NOTE: On the 250/300, there should be 3.2 mm (1/8 in.) free-play gap between the brake pedal arm and the brake pedal bracket.

Back to Table of Contents
Back to Section Table of Contents

www.mymowerparts.com

For Arctic Cat Discount Parts Call 606-678-9623 or 606-561-4983

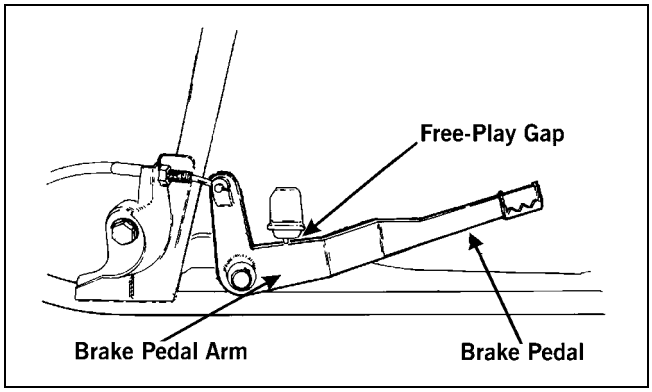

ATV0088E

■ NOTE: On the 400/500, there should be 12.7 mm (1/2 in.) free-play gap between the pedal and the footrest.

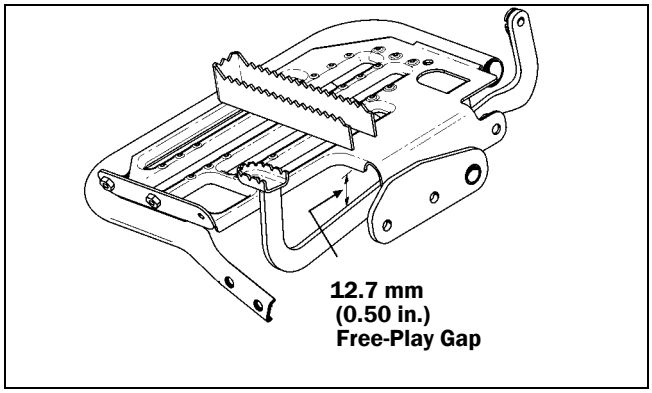

736-569A

5. If the free-play gap is not within tolerance, readjust the jam nuts of the adjuster arm in 1/4 turn increments until the correct free-play gap is attained.

■ NOTE: Apply the brake a number of times to ensure the wheels lock and the brakelight illuminates properly.

6. If the rear cable adjustment is inadequate to attain the proper brake pedal arm free-play gap, make adjustment at the front cable adjuster jam nuts.

⚠ CAUTION

If adjusting the rear cable at both ends does not attain proper brake pedal arm free-play, the brake pads must be replaced.

MEASURING/REPLACING BRAKE PADS

Removing

1. Support the ATV on a suitable stand.
2. Remove the right rear wheel and account for the cap screws.
3. Loosen the rear cable adjuster jam nuts; then remove the cap screws securing the auxiliary brake to the axle housing.
4. Remove the brake pads from the caliper.

Inspecting and Measuring

1. Inspect the pads for gouges, chips, or wear.
2. Inspect the disc for gouges, grooves, cracks, and warpage.
3. Using a calipers, measure the thickness of each brake pad.
4. If the thickness of either brake pad is less than 3.2 mm (0.125 in.), the brake pads must be replaced.

■ NOTE: The brake pads should be replaced as a set.

Installing

1. Place the brake pads into the caliper.

■ NOTE: The metal backing of the pad will be facing the adjuster arms when installed properly.

2. Slide brake caliper assembly over the brake disc and into position on the knuckle; then secure the caliper with the cap screws tightened to 2.1 kg-m (15 ft-lb).
3. Install the wheel and secure. Tighten to 5.5 kg-m (40 ft-lb).
4. Adjust the brake (see Adjusting in this sub-section).
5. Remove the ATV from the support stand.

■ NOTE: Whenever installing new pads, the new pads must be burnished (see Burnishing Brake Pads in this section).

Burnishing Brake Pads

Brake pads (both hydraulic and auxiliary) must be burnished to achieve full braking effectiveness. Braking distance will be extended until brake pads are properly burnished. To properly burnish the brake pads, use the following procedure.

⚠ WARNING

Failure to properly burnish the brake pads could lead to premature brake pad wear or brake loss. Brake loss can result in severe injury.

1. Choose an area large enough to safely accelerate the ATV to 30 mph and to brake to a stop.
2. Accelerate to 30 mph; then compress brake lever or apply the auxiliary brake to decelerate to 0-5 mph.

www.mymowerparts.com

For Arctic Cat Discount Parts Call 606-678-9623 or 606-561-4983

3. Repeat procedure on each brake system five times until brake pads are burnished.

4. Adjust the auxiliary brake (if necessary).

5. Verify that the brakelight illuminates when the hand lever is compressed or the brake pedal is depressed.

Coolant
(500)

The cooling system capacity is approximately 2.9 L (3 U.S. qt). The cooling system should be inspected daily for leakage and damage. Also, the coolant level should be checked periodically.

When filling the cooling system, use premixed Arctic Cat Antifreeze (p/n 0638-395). While the cooling system is being filled, air pockets may develop; therefore, run the engine for five minutes after the initial fill, shut the engine off, and then fill the cooling system to the bottom of the stand pipe in the radiator neck.

AN604D

⚠ CAUTION

After operating the ATV for the initial 5-10 minutes, stop the engine, allow the engine to cool down, and check the coolant level. Add coolant as necessary.

Checking/Replacing V-Belt
(Automatic Transmission)

REMOVING

1. Remove the right-side footrest (see Section 8).

2. Loosen the clamp securing the cooling shroud to the cooling duct.

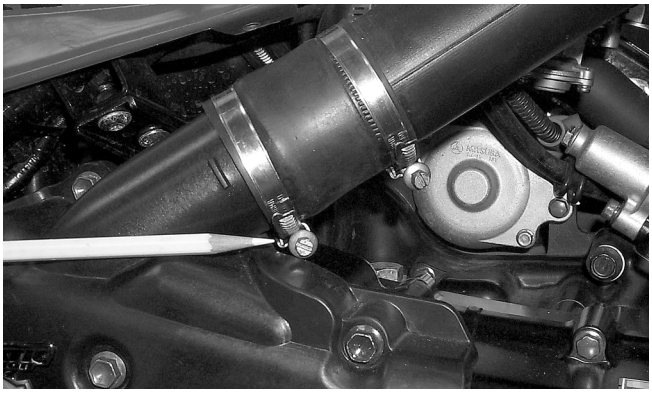

AF931

3. Remove the cap screws securing the cooling shroud to the V-belt cover; then remove the cooling shroud.

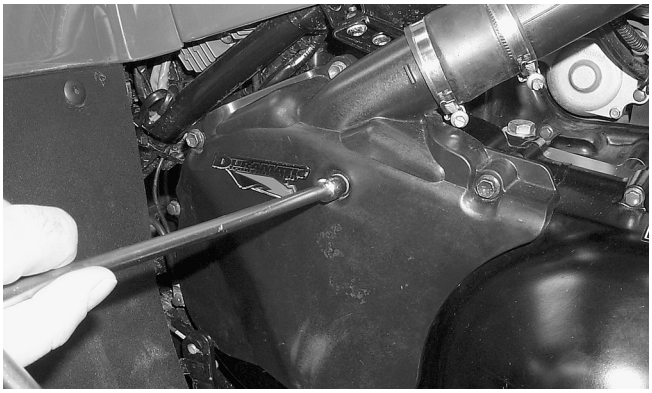

AF932

4. Remove the cap screws securing the V-belt cover noting the location of the different-lengthed cap screws for installing purposes; then using a rubber mallet, gently tap on the cover tabs to loosen the cover. Remove the cover.

■ NOTE: Note the location of the main engine ground wire for installing purposes.

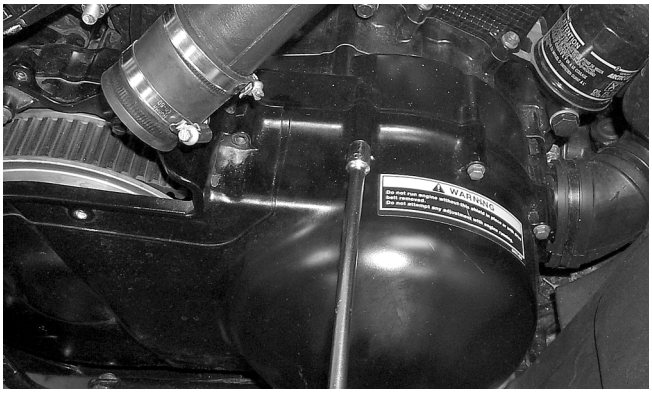

AF933

5. Remove the nut securing the movable drive face; then remove the face. Account for the spacer.

Back to Table of Contents
Back to Section Table of Contents

www.mymowerparts.com

For Arctic Cat Discount Parts Call 606-678-9623 or 606-561-4983

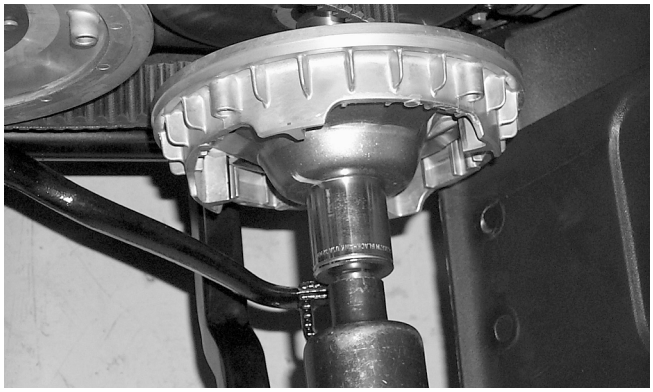

CC546

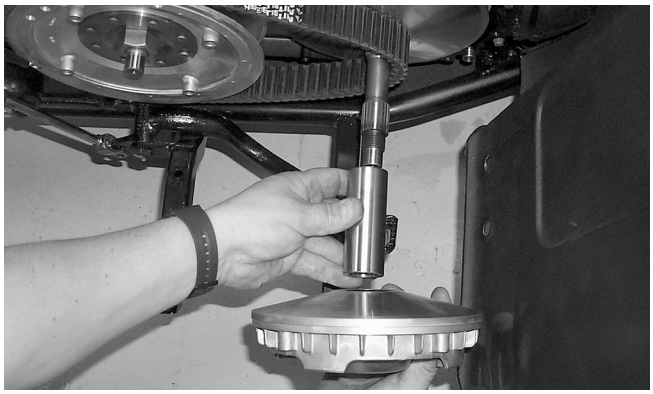

CC547

6. Remove the V-belt.

CC550

INSTALLING

1. Spread the faces of the driven clutch by pushing the inner face toward the engine while turning it counterclockwise; then when the faces are separated, insert a wedge (approximately 3/8 in. thick) between the faces. Release the inner face.

CC549

2. Place the V-belt into position on the driven clutch and over the front shaft.

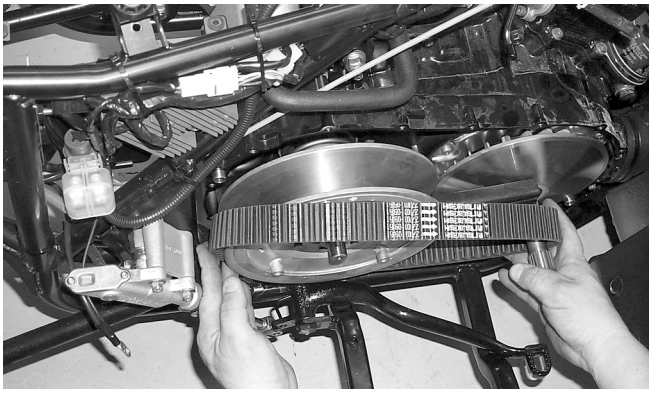

CC550

■ NOTE: The arrow on the V-belt should point forward.

3. Pinch the V-belt together near its center and slide the spacer and movable drive face onto the driveshaft. Secure the drive face with a nut. Tighten the nut to 10.4-11.8 kg-m (75-85 ft-lb).

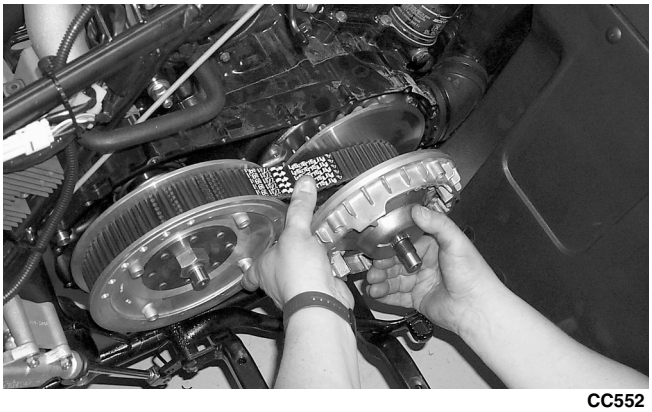

CC552

■ NOTE: At this point, the wedge can be removed from between the driven clutch faces.

4. Rotate the V-belt and clutches until the V-belt is flush with the top of the driven clutch.

www.mymowerparts.com

For Arctic Cat Discount Parts Call 606-678-9623 or 606-561-4983

5. Place the V-belt cover gasket into position; then install the cover and secure with the cap screws making sure the different-lengthed cap screws are in their proper location. Tighten the cap screws to 1.1 kg-m (8 ft-lb).

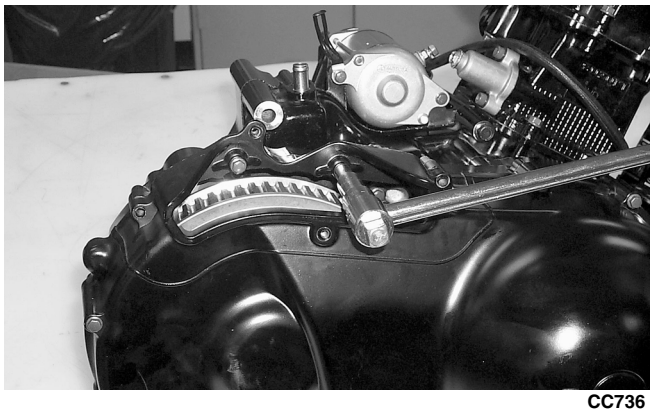

CC736

■ **NOTE: Make sure the main engine ground wire is installed and secured in the proper location.**

6. Place the cooling shroud into position on the V-belt cover; then secure with cap screws. Tighten securely.

7. Tighten the clamp securing the cooling shroud to the cooling duct.

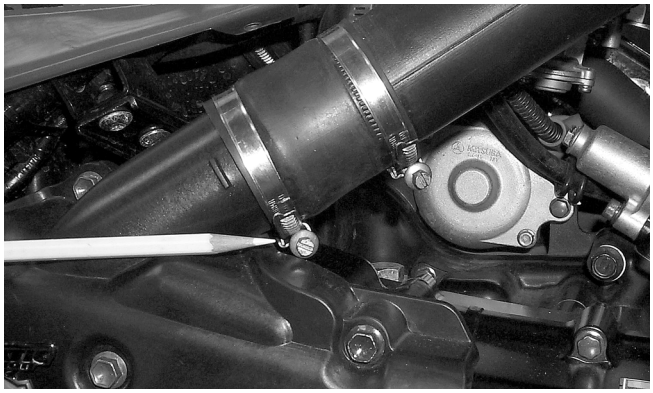

AF931

8. Secure the front fender to the footrest with the two cap screws. Tighten securely.

9. Install the right-side footrest (see Section 8).

Back to Table of Contents

Back to Section Table of Contents

www.mymowerparts.com